WESTERN-CULLEN-HAYES

WESTERN-CULLEN-HAYES

RAILROAD PRODUCTS

WESTERN-CULLEN-HAYES, Inc.

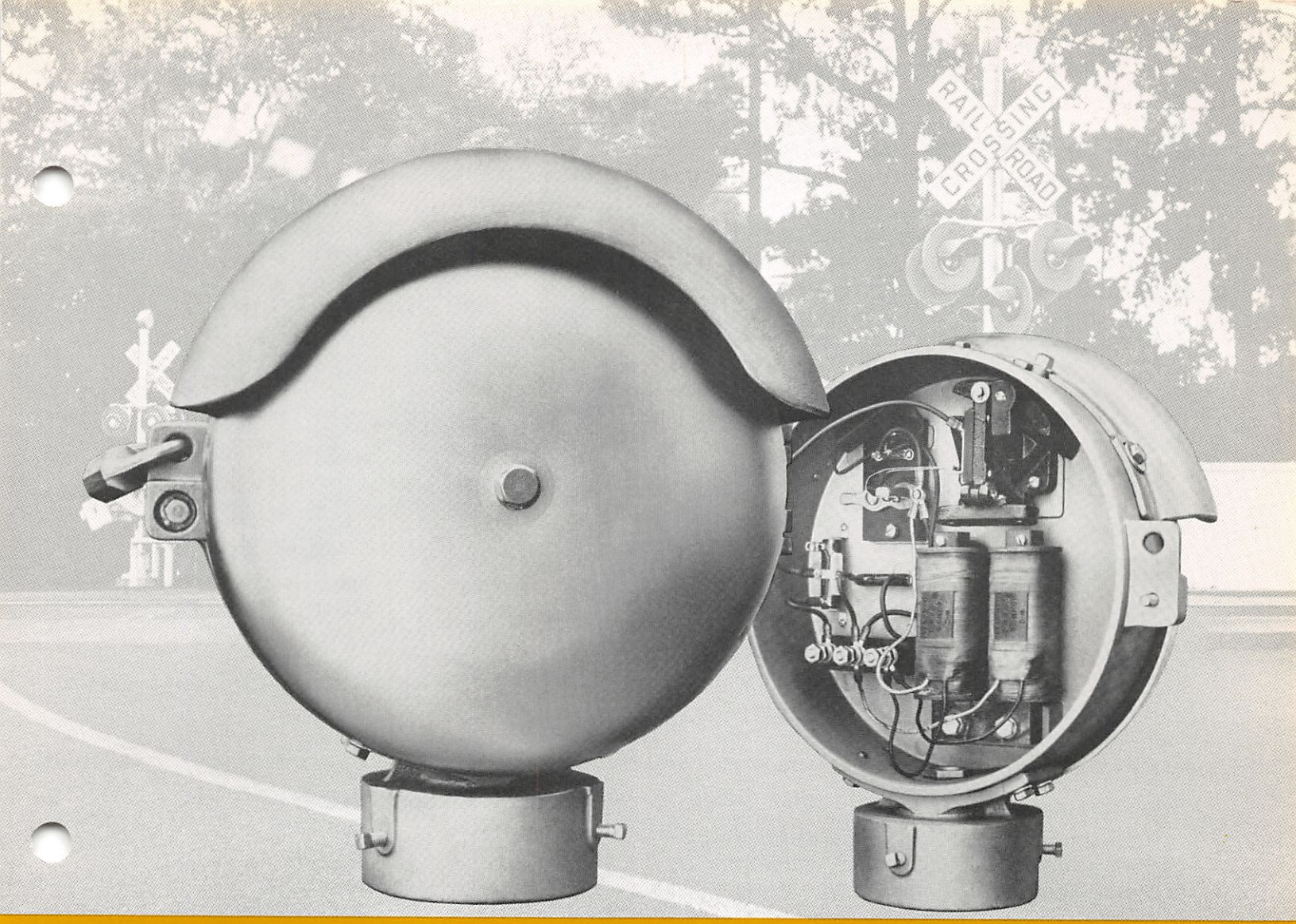

Cast aluminum, lightweight,
Western-Cullen "Model 333"

Highway Crossing Bell.

Adaptable to any signal, can be mounted on the mast or wall.

WC Hayes

WESTERN-CULLEN-HAYES, Inc.

2700 West 36th Place • Chicago, Illinois 60632 • Telephone: 312/254-9600 • Telex 25-3206

About the "333" Bell

Western-Cullen presents a refined and improved highway crossing bell. Our model 333 incorporates the design features of our earlier Model 222 with the addition of an adjustable ringing rate (average 200 strokes per minute), a condenser as a standard item, an improved intensity and a special locking feature which allows the bell cover to be secured with a standard AAR hex nut wrench and a padlock (padlock optional). See photo.

Constructed of lightweight, rust-proof cast aluminum, the Model 333 has been factory tested at 8,000,000 operations with only one oiling.

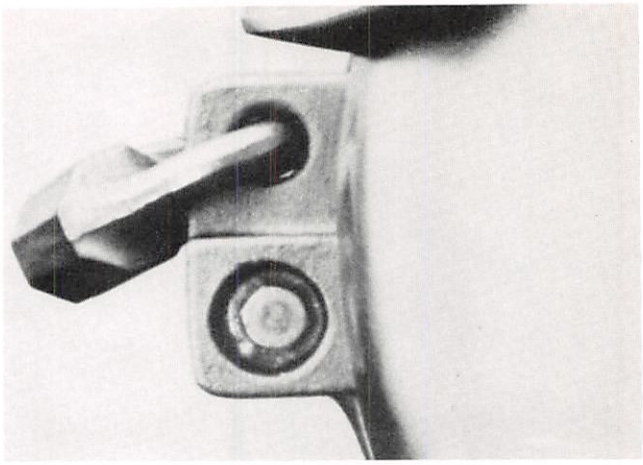

Operation

W-C's Model 333 functions from 6 to 16 VDC and is provided with an adjustable resistor for proper current operation, (600Ma) over the acceptable voltage range.

Specifications

Conforms to A.A.R. Signal Specification 44-65 Highway Crossing Bell. Operational instructions and wiring schematic are included on the inside cover of every bell.

Physical Dimensions of Bell

Height 1'-3"
Width 1'-2"
Depth 7"

Weight: Complete Bell approx. 27 lbs.

How to order

Top of Post or Pipe Mounting Bell

Specify: Pipe Mount — 0333CR for 4" Pipe — 10 to 12 volt DC (Nominal)
0333FR for 5" Pipe — 10 to 12 volt DC (Nominal)
0333HR for 6" Pipe — 10 to 12 volt DC (Nominal)

Indicate: Soft or Loud Tone Hammer

Wall or Pole Mounted Bell

Specify: Wall Mount — 0333AW-10 to 12 volt DC (Nominal)
Also available in 250 volt DC.

Side or Pole Mount — 0333ARP-10 to 12 volt DC (Nominal)
Specify pipe size 3" to 6".
Specials are available.

Indicate: Soft or Loud Tone Hammer

Mounting Fittings

GOOSENECK BRACKET

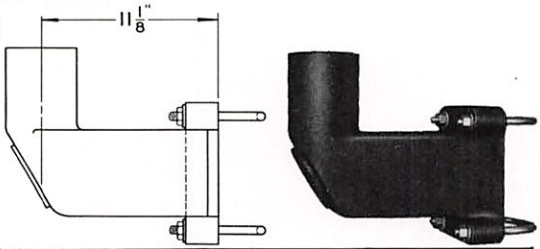

873-27B	3" I.D. Pipe	873-30B	5" I.D. Pipe
873-28B	3½" I.D. Pipe	873-31B	6" I.D. Pipe
873-29B	4" I.D. Pipe	873-32B	8" I.D. Pipe

REDUCER

990-63	5" to 4" I.D. Pipe

MOUNTING ADAPTER FLAT SURFACE

216-2	4" I.D. Pipe
216-3	3" I.D. Pipe

Parts List
For Model 333 Bell For Post or Pipe Mounting

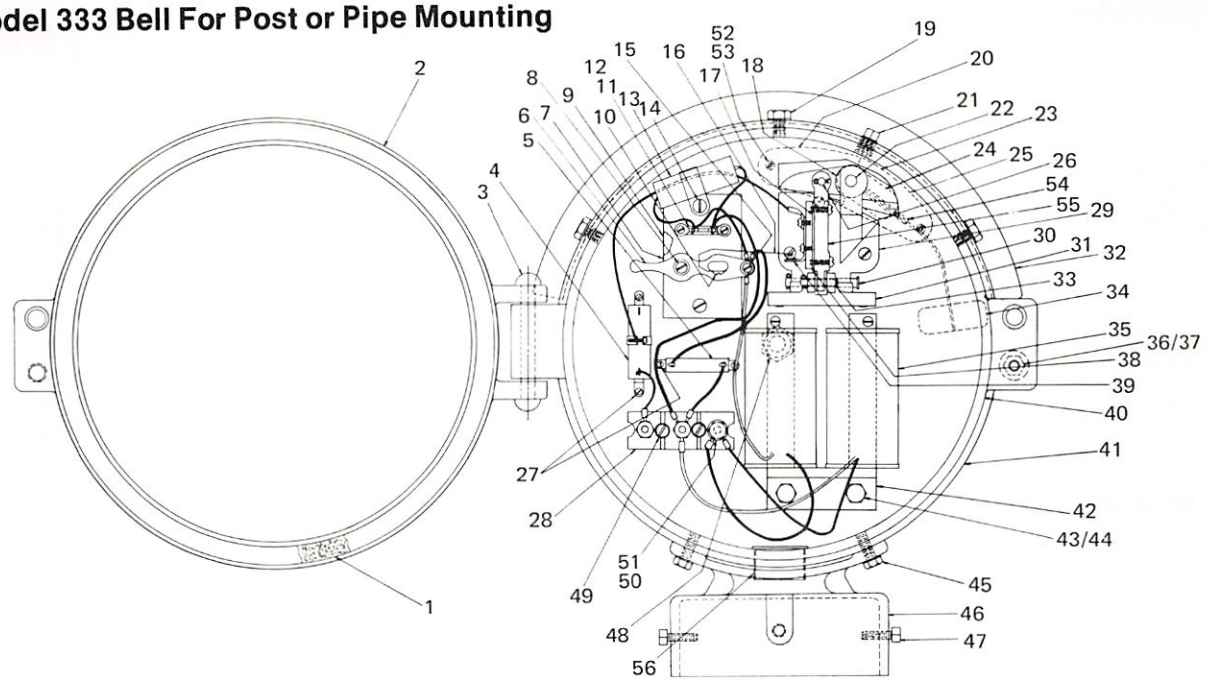

Ref. No.	Description	Order No.	Qty.
1	Cover Packing Strip	1217-2	1
2	Cover	1219-2M	1
3	⅜" Dia. x 3½" Lg. Rd. Hd. Rivet		1
4	Adjustable Resistor	1210-42	1
5	Fixed Resistance	1235-4	1
6	Contact Finger Support	1209-14	1
7	Contact Block	1210-11	1
8	¼"-20x½" Lg. Rd. Hd. Mach. Scr. Stl. With Washer	10708	1
9	Insulator	1249-16CA	1
10	#8-32x¼" Lg. Rd. Hd. Mach. Scr.		1
11	Terminal Strip	1101-115	1
12	#6-32x⅜" Lg. Rd. Mach. Scr. Cad. Plt.		2
13	Condenser	1101-114	1
14	¼"-20x⅞" Lg. Fil. Hd. Mach. Scr.		5
15	#8-32x⅜" Lg. RHMS & #8 Flat Washer		1
16	Contact Finger (With Silver Contacts)	1222-10	
16A	Contact Finger (With Platinum Contacts)	1222-10AC	
17	Insulation Strip	1210-10	1
18	Packing Ring	1248-16	1
19	5/16"-18x⅝" Lg. Hex Hd. Cap Scr. With 5/16 Flat Washer		3
20	Left Hand Dust Guard	1248-12	1
21	¼" Steel Pipe Plug		1
22	Oscillator Stud	1209-8	
23	Right Hand Dust Guard	1248-11	1
24	Oscillator With Bushing & Stud (Includes Item #26)	1209-13	1
25	Gasket	1248-15	1
26	Operating Link Stud With Cotter Pin	1209-6	1
27	#6-32x¼" Lg. RHMS		4
28	Terminal Strip	2508-103	1
29	Movement Base	1209-1	1
30	Armature Pin Complete With Cotter Pins	1209-10	1
31	Armature	1209-2	1

Ref. No.	Description	Order No.	Qty.
32	Rain Shield	1208-CA	1
33	Operating Link Pin Complete With Cotter Pins	1209-9	1
34	Hammer Complete With Reinforcement Springs (Loud Tone)	1210-17	1
34A	Hammer Complete with Reinforcement Springs (Soft Tone)	1210-20	1
35	Coil Pair	1231-6-X	1
36	5/16"-18x1" Lg. Hex Hd. Cap Scr.		1
37	Push Nut	970-45	1
38	Link Insulator	1210-4	1
39	Moving Contact (Silver Contact)	1210-5	1
39A	Moving Contact (Platinum Contact)	1210-5B	1
40	Case	1220-2M	1
41	Gong	1211	1
42	Core Assy.	1249-6A	1
43	5/16"-18x1¼" Lg. Hex Hd. Cap Scr.		2
44	5/16" Lockwasher		2
45	5/16"-18x¾" Lg. Hex Hed. Cap. Scr. With 5/16" Lockwasher		2
46	Socket for 3" I.D. Pipe	1206-3B-CA	1
46A	Socket for 3½" I.D. Pipe	1206-2B-CA	1
46B	Socket for 4" I.D. Pipe	1206-4B-CA	1
46C	Socket for 5" I.D. Pipe	1206-5B-CA	1
46D	Socket for 6" I.D. Pipe	1206-6B-CA	1
47	Set Screw 5/16"-18x¾" Lg. Cup Pt. Cad. Plt.		2
48	½"-13x⅞" Lg. Hex Hd. Cap. Scr. and ½" Lockwasher		1
49	¼"-20x⅞" Lg. Fil. Hd. Cap. Scr.		2
50	Insulating Cap	R-2000-1	1
51	Insulating Sleeve	R-2000-2B	1
52	#8-32x¼" Lg. RHMS Scr.		2
53	#8 Flat Washer		2
54	Oscillator and Hammer Assy.	1215-1	1
55	Movement Base Assy. Complete	1215	1
56	¾" Chase Nipple		1

Parts List
For Model 333 Bell for Wall or Pole Side Mount

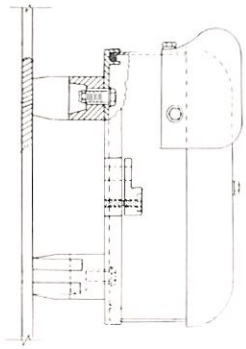

BELL MOUNTED ON WALL

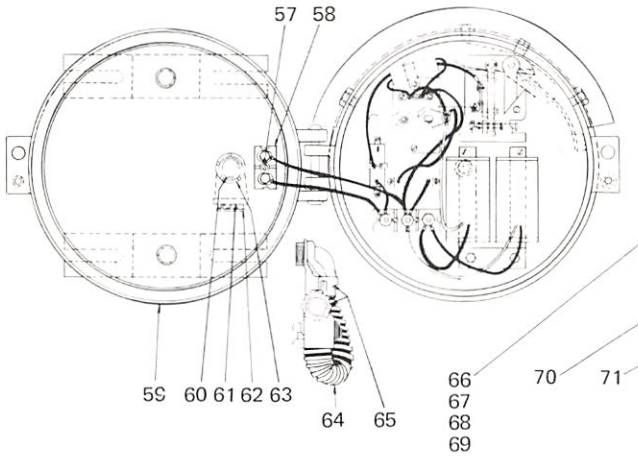

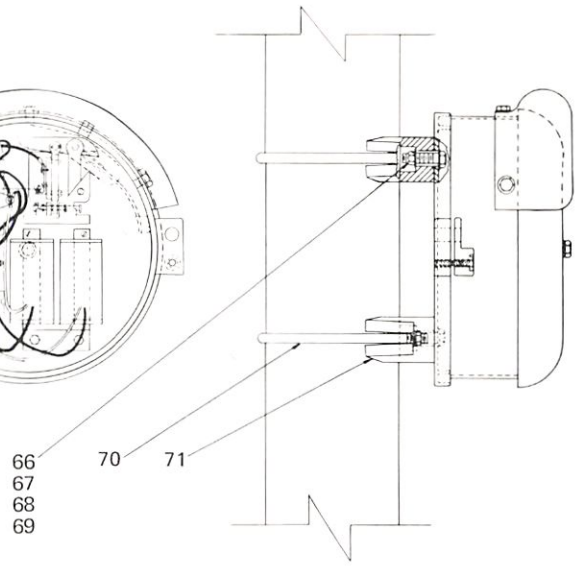

BELL MOUNTED ON 6'' DIAMETER PIPE

Ref. No.	Description	Order No.	Qty.
57	¼''-20 Slotted Screw, Fil. Hd. x ¾'' Lg. Cad. Plt.		1
58	Terminal Block Assy.		
59	Cover for Wall or Post Mount	1219-3M	1
60	Elbow Wire Outlet		1
61	¾'' Street el		1
61A	¾'' Pipe Nipple		1
62	¾'' Chase Nipple		1
63	¾'' Conduit Bushing		1
64	¾'' Penflex Conduit x 18'' Lg.		1

Ref. No.	Description	Order No.	Qty.
65	¾'' 90° Squeeze Connector		1
66	⅝''-11 Hex Hd. Bolt x 1½ Lg. Cad. Plt.		2
67	⅝''-11 Nut. Hex Hd. Cad. Plt.		2
68	⅝'' Flat Washer Cad. Plt.		2
69	⅝'' Lock Washer Cad. Plt.		2
70A	U-Bolt 4'' Pipe	3364-2-2X	2
70B	U-Bolt 5'' Pipe	3364-5-5X	2
70C	U-Bolt 6'' Pipe	3364-34-34X	2
71	Adapter Clamp	3364A1-1-1A	2

WESTERN-CULLEN DIVISION
Federal Signal Corporation
2700 West 36th Place, Chicago, Illinois 60632

Type 222A Highway Crossing Bell
For Side of Post or Wall Mounting

For 24, 32, 64, 120, 250, 300 and 600 Volts D.C.
Approximately 200 Strokes Per Minute

Physically the Type 222A Bells, for operation on the higher voltages, are identical with those described on page 5-4. Electrically they are as described on the opposite page, 5-6.

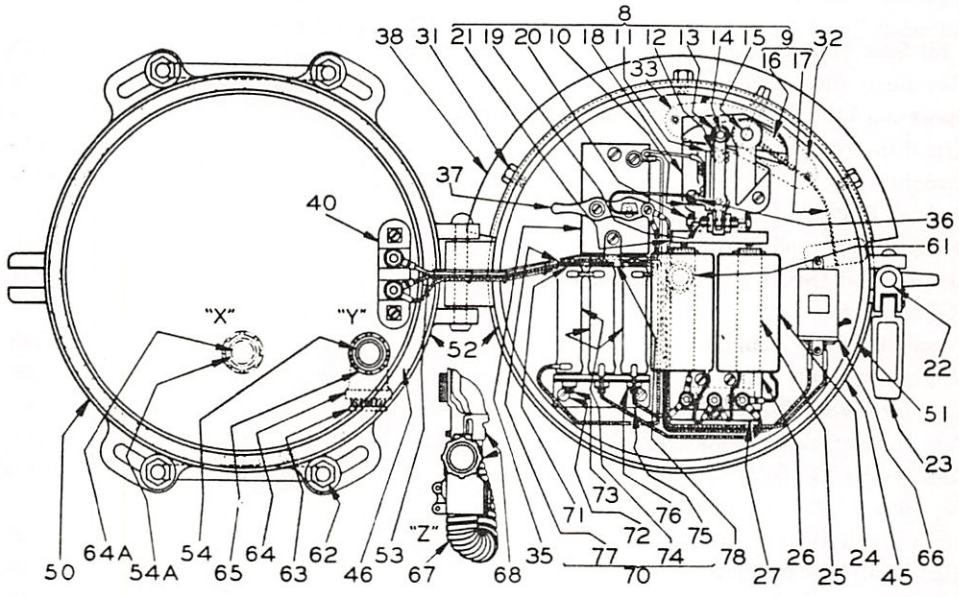

Ref. D

Ref. No.	Description	Piece No.
D	Type 222A Bell, 24 to 600 volts D.C., for mounting on side of pipe, direct wire entrance to pipe, view "X". (Specify operating voltage, size of pipe and loud or soft tone hammer)	0222A1
D1	Same as Ref. D but with outside wire entrance "Y"	0222A
D2	Same as Ref. D but with flexible connection "Z"	0222AP

SPECIFY: Operating Voltage, size of pipe and Loud or Soft Tone Hammer. (Loud Tone Hammer will be furnished unless otherwise specified.)

For Replacement Parts Listing see Pages 5-8 and 5-9

Highway Crossing Bells Type 222 and Type 1203

REPLACEMENT PARTS

All Type 222 and Type 1203 Highway Crossing Bells now have cast aluminum Case, Cover, Mounting Socket and Rain Shield. Cast Iron parts are no longer available. However the cast aluminum components are interchangeable with the cast iron parts and can be used for replacement.

Ref. No.	Description	Piece No.
6	Case and Cover Subassembly for Ref. C Bells	1249-20A
7	Case and Cover Subassembly for Ref. A Bells	1249-20
8	Movement Base Assembly Complete (Includes items 9 thru 21)	1215
9	Oscillator and Hammer Assembly (Includes items 16 and 17)	1215-1
10	Moving Contact (with Silver Contact)	1210-5
10a	Moving Contact (with Platinum Contact)	1210-5B
11	Link Insulator	1210-4
12	Insulation Strip	1210-10
13	Operating Link	1209-4
14	Operating Link Stud	1209-6
15	Oscillator Stud	1209-8
16	Oscillator with Bushing and Stud (Includes item 14)	1209-13
17	Hammer Complete with Reenforcement Springs (For Loud Tone)	1210-17
17a	Hammer Complete with Reenforcement Springs (Bakelite Faced for Soft Tone)	1210-20
18	Movement Base only	1209-1
19	Operating Link Pin Complete with Cotter Pins	1209-9
20	Armature Pin Complete with Cotter Pins	1209-10
21	Armature	1209-2
22	Locking Bolt	1410-11CA
23	Locking Hasp and Nut	1410-31CA
24	Magnet Coil (Specify Resistance of Bell)	1231-3
25	Magnet Core	1209-7
26	Terminal Block complete	1249-7
27	Magnet Bracket	1209-3
28	Case for Type 1203 Bell	1203-12A
29	Case for Ref. A (6-16 volt Bell)	1206A-10
30	Case for Ref. C Bells	1206C-10
31	Cap Screw, 5/16" — 18 x 5/8" lg. stl., hex. hd.	
32	Right Hand Dust Guard	1248-1
32a	Right Hand Dust Guard (fish type)	1248-3
33	Left Hand Dust Guard	1248-2
34	Flexible Lead Wire (Included in Item 59)	1222-11
35	Contact Block	1210-3
36	Contact Finger (With Silver Contacts)	1222-10
36a	Contact Finger (With Platinum Contacts)	1222-10B
37	Contact Finger Support	1209-14
38	Rain Shield	1208-CA
39	Cover for Ref. A and C Bells (Includes Packing)	1217-1CA
40	Porcelain Terminal Block	1056-16
41	Non-arcing Resistance Complete	1235
43	Flexible Wire Lead	1222-14
44	Flexible Wire Lead	1222-13
45	Steel Gong	1211
46	Cover Packing Strip	1217-2
50	Cover for Ref. B1 & D1 (Outside Wire Entrance)	1207-5CA
50a	Cover for Ref. B & D (Wire entrance into pipe)	1218-1CA
50b	Cover for Ref. B2 & D2 (flexible conduit entrance)	1207A-5CA

Highway Crossing Bells Type 222 and Type 1203

REPLACEMENT PARTS
(Continued)

Ref. No.	Description	Piece No.
51	Case for Ref. D, D1, D2	1206B-10CA
51a	Case for Ref. B, B1 and B2	1206-10CA
52	Case and Cover Subassembly for Ref. D1	1249-5B
52a	Case and Cover Subassembly for Ref. D	1249-4B
52b	Case and Cover Subassembly for Ref. D2	1249-4A
53	Flexible Wire Lead	1222-18
53a	Flexible Wire Leads for Ref. B	1222-22
54	Elbow Wire Outlet for Ref. B1 and D1 (Outside Wire Entrance) (Includes Items 63, 64 and 65)	1222-15
54a	Straight Wire Outlet for Ref. B1 and D1 (Wire Entrance Into Pipe) (Includes Items 64A and 65)	1222-16
59	Variable Resistance Unit	1210-28
61	Cap Screw, ½″-13x⅞″ Lg. Hex Hd., Steel and Steel Lock Washer	
62	U-Bolt for 4″ I.D. pipe	1207-1
62a	U-Bolt for 5″ I.D. pipe	1207-2
62b	U-Bolt for 3½″ I.D. pipe	1207-3
62c	U-Bolt for 3″ I.D. pipe	1207-4
62d	U-Bolt for 6″ pipe	1207-8
62e	Hinged "U" Bolt for 8″ pipe	3364-33
63	¾″ Chase Nipple	
64	¾″ Street El	
64a	¾″ Pipe Nipple	
65	¾″ Conduit Bushing	
66	Non-arcing Condenser	1101-87A
67	¾″ Penflex Conduit, 18″ Lg.	
68	¾″ 90° Squeeze Connector	
70	Subassembly of Shunt Resistance for 250 Volts D.C.	1237-25
70a	Subassembly of Shunt Resistance for 600 Volts D.C.	1237-25B
70b	Subassembly of Shunt Resistance for 300 Volts D.C.	1237-25C
71	Washer	1115
72	Mach. Screw, 1/4″-20x1/4″ Lg., Rd. Hd., Brass	
73	Stove Bolt, 1/4″-20x4″ Lg., Rd. Hd., Steel	
74	Resistance Unit, 350 Ohms	1222-17
74a	Resistance Unit, 700 Ohms	1222-17B
74b	Resistance Unit, 400 Ohms	1222-17C
75	Mounting Bracket	1290-2
76	Square Nut, ¼″-20, Steel	
77	Plain Brass Washer	
78	Wire Clip	1012-13
79	Socket for 3″ I.D. pipe (Includes Items 80 and 81)	1206-3B-CA
79a	Socket for 3½″ I.D. pipe (Includes Items 80 and 81)	1206-2B-CA
79b	Socket for 4″ I.D. pipe (Includes Items 80 and 81)	1206-4B-CA
79c	Socket for 5″ I.D. pipe (Includes Items 80 and 81)	1206-5B-CA
79d	Socket for 6″ I.D. pipe (Includes Items 80 and 81)	1206-6B-CA
80	Set Screw 5/16″-18x¾″ Lg. Cup Pt. Steel	
81	Cap Screw 5/16″-18x⅝″ Lg. Hex. Hd., Steel and Lockwasher	
82	Case and Cover Subassembly for Ref. B1	1249-4
82a	Case and Cover Subassembly for Ref. B	1249-5
82b	Case Cover Subassembly for Ref. B2	1249-5A
83	Wire Cable (For 1203 Bells Only)	1203-24
85	Cover for 1203 Bell, drilled for rectifier and terminal blocks only	1203-9C
85a	Cover for 1203 Bell, drilled for rectifier, 60 cycle transformer and terminal blocks	1203-9A
85b	Same as Ref. 85a except drilled for 25 cycle transformer	1203-9B
86	Rectifier only for 12-16 volt input, 25 or 60 cycles	1203-10
87	Transformer only, (specify primary voltage and frequency)	1203-11

Type 1203 Highway Crossing Bell

FOR NORMAL LOW VOLTAGE A.C. OPERATION WITH D.C. RESERVE

12" Gong

Approximately 200 strokes per minute

Type 1203 Highway Crossing Bells consist of standard Type 222 bell mechanisms with a deepened cover in which to mount a copper oxide rectifier or a transformer and rectifier to supply direct current to the operating mechanism.

The Type 1203BR to 1203HR Bells may be operated directly from a 12-16 volt A.C. source, either 25 or 60 cycles, by connecting to the binding posts of the lower terminal block in the housing. When desired the bell can be normally operated from the A.C. source with D.C., approximately 2 volts lower than the A.C. supply, automatically applied to the upper block in case of A.C. power failure.

Variable resistance, item 59 in the diagram, is used to adjust to the input voltage applied within the range 12 to 16.

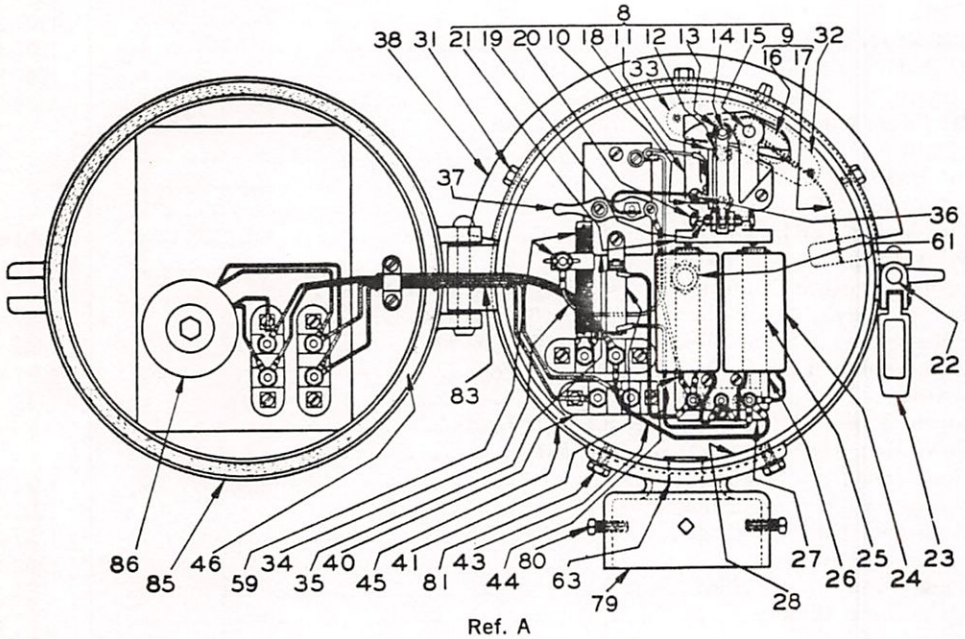

Ref. A

Ref. No.	Description	Piece No.
A	Type 1203 Bell for normal low voltage A.C. with D.C. reserve for mounting on top of 3½" I.D. pipe. Specify operating voltage and loud or soft tone hammer	1203BR
A1	Same as Ref. A but for mounting on 4" I.D. pipe	1203CR
A2	Same as Ref. A but for mounting on 3" I.D. pipe	1203DR
A3	Same as Ref. A but for mounting on 5" I.D. pipe	1203FR
A4	Same as Ref. A but for mounting on 6" I.D. pipe	1203HR

SPECIFY: Operating Voltage and Loud or Soft Tone Hammer. (Loud Tone Hammer will be furnished unless otherwise specified.)

NOTE: Type 1203 Highway Crossing Bell can be mounted on the side of a pole or flat surface by use of the Gooseneck Bracket shown on page 5-26.

For Replacement Parts Listing see pages 5-8 and 5-9.

Type 1203 Highway Crossing Bell

FOR OPERATION ON COMMERCIAL A.C. POWER

115 or 230 Volts 25 or 60 Cycles

12" Gong

Approximately 200 strokes per minute

The Type 1203B to 1203H Bells are the same as the 1203BR to 1203HR except that a transformer is provided to reduce commercial sources of 115 or 230 volts to 12-16 volts for the rectifier input. Secondary taps on the transformer provide the necessary adjustment for variations in A.C. line voltage.

When ordering Bells with transformers it is necessary to specify the voltage and frequency of the A.C. supply.

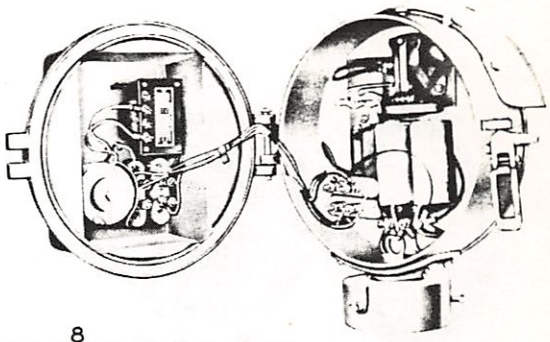

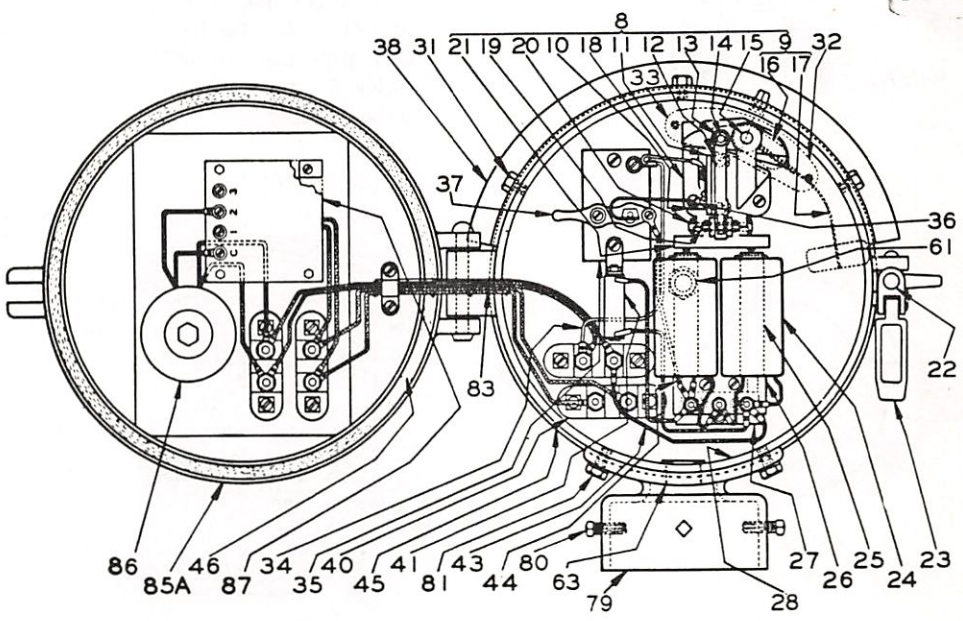

Ref. B

Ref. No.	Description	Piece No.
B	Type 1203 Bell A.C. operation for mounting on top of 3½" I.D. pipe. Specify operating voltage, frequency (115 or 230 volts, 25 or 60 cycles), and loud or soft tone hammer	1203B
B1	Same as Ref. B but for mounting on 4" I.D. pipe	1203C
B2	Same as Ref. B but for mounting on 3" I.D. pipe	1203D
B3	Same as Ref. B but for mounting on 5" I.D. pipe	1203F
B4	Same as Ref. B but for mounting on 6" I.D. pipe	1203H

SPECIFY: Operating Voltage and Frequency (115 or 230 volts, 25 or 60 cycles) and Loud or Soft Tone Hammer. (Loud Tone Hammer will be furnished unless otherwise specified.)

NOTE: Type 1203 Highway Crossing Bell can be mounted on the side of a pole or flat surface by use of the Gooseneck Bracket shown on page 5-26.

For Replacement Parts Listing see pages 5-8 and 5-9.

Type 1275 Pedestrian Crossing Bell

For 6 to 16 Volts D.C.

CAST ALUMINUM HOUSING 8″ STEEL GONG

Approximately 225 Strokes Per Minute

Bakelite Faced Soft-tone Hammer

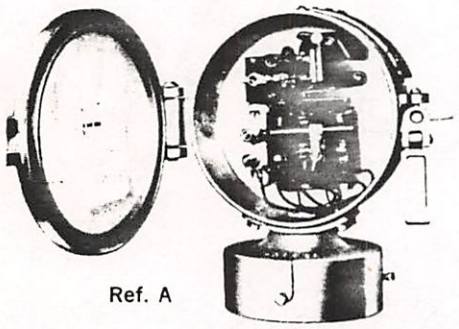

Ref. A

Type 1275 Pedestrian Crossing Bell was especially designed for use in residential areas where too loud a warning might prove offensive. It is identical with the well-known Type 222 Bell except that it is built with an 8″ gong and proportionally smaller parts. The Type 1275 bell is equipped with a variable resistance for 6 to 16 volts D.C. operation.

It is furnished with either a mounting socket, attached to the base, for mounting on the top of a pipe post or with adaptor clamps and "U" bolts for mounting on the side of the mast, as listed below.

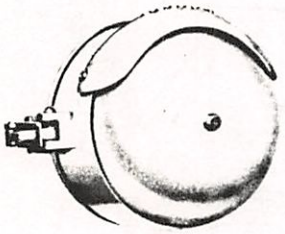

Ref. B

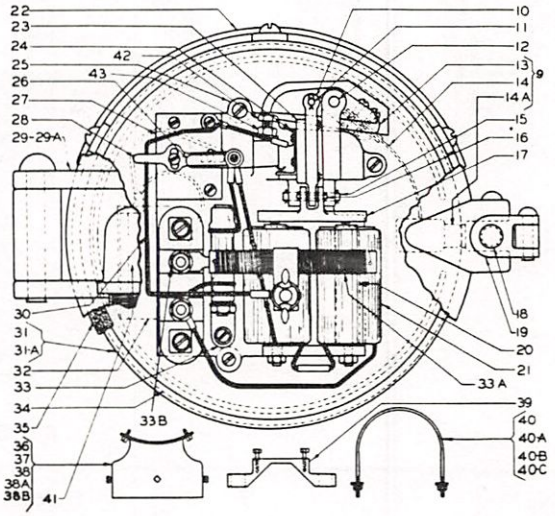

Ref. No.	Description	Piece No.
A	Type 1275 Pedestrian Crossing Bell for mounting on top of 3½″ I.D. pipe post	1275BR
A1	Same as Ref. A but for mounting on 4″ I.D. pipe post	1275CR
A2	Same as Ref. A but for mounting on 3″ I.D. pipe post	1275DR
A3	Same as Ref. A but for mounting on 5″ I.D. pipe post	1275FR
A4	Same as Ref. A but for mounting on 6″ I.D. pipe post	1275HR
B	Type 1275 Pedestrian Crossing Bell with adaptor clamps and "U" Bolts, for mounting on side of pipe post. (Specify I.D. of pipe)	1275AR

For Replacement Parts Listing see opposite page.

Type 1275 Pedestrian Crossing Bell

Cast aluminum parts furnished for the Case, Cover, Mounting Socket and Rain Shield are interchangeable with cast iron parts formerly used.

REPLACEMENT PARTS

Ref. No.	Description	Piece No.
9	Assembly of oscillator and hammer	1275-3B
10	Operating link	1282
11	Operating link stud	1293
12	Oscillator pin	1294
13	Oscillator complete with bushings and stud	1280-1
14	Hammer complete with bakelite head	1299B
14a	Bakelite head only	1299-5B
15	Armature pin	1292
16	Link bracket pin	1291
17	Armature	1281-1
18	Locking bolt	1410-11CA
19	Locking hasp and nut	1410-31CA
20	Magnet core	1296
21	Magnet coil (2 required)	1297-3-5
22	Rain shield	1284CA
23	Contact mounting block	1287
24	Moving contact	1288
25	Base plate	1283
26	Contact finger	1289
27	Contact mounting block	1286
28	Contact finger support	1285
29	Door complete (for side of pole mounting)	1276-5CA
29a	Door complete (for top of pole mounting)	1276-3CA
30	Flexible wire lead	1288-1
31	Bell case (for top of pole mounting)	1277CA
31a	Bell case (for side of pole mounting)	1277-1CA
32	¼ M.F. condenser	1101-87B
33	Non-arcing resistance	1235
33a	Variable resistance unit	1210-28A
33b	Variable resistance unit spacer	1290-5
34	Steel gong	1295
35	Felt door packing strips	1276-4
36	Case socket for 4" I.D. pipe w/mounting screws and set screws	1278-3CA
37	Case socket for 3½" I.D. pipe w/mounting screws and set screws	1278-4CA
38	Case socket for 3" I.D. pipe w/mounting screws and set screws	1278-5CA
38a	Case socket for 5" I.D. pipe w/mounting screws and set screws	1278-5ACA
38b	Case socket for 6" I.D. pipe w/mounting screws and set screws	1278-6CA
39	Clamp for mounting bell to side of pole (2 required)	1279-1
40	U-bolt for mounting bell to 4" I.D. pole (2 required)	1276-11
40a	U-bolt for mounting bell to 3½" I.D. pole (2 required)	1276-10
40b	U-bolt for mounting bell to 3" I.D. pole (2 required)	1276-13
40c	U-bolt for mounting bell to 5" I.D. pole (2 required)	1276-12
41	Wire outlet (used only on 1275A bell)	1222-15
42	No. 10-24x1/2" long hex.head steel cap screw	
43	No. 10-24 steel hex.nut	

Type 555 Highway Crossing Bell

Motor Driven

For 6 to 600 Volts D.C. or 115 or 230 Volts A.C., 25 or 60 cycles

CAST ALUMINUM HOUSING

12" STEEL GONG

Approximately 112 Strokes Per Minute

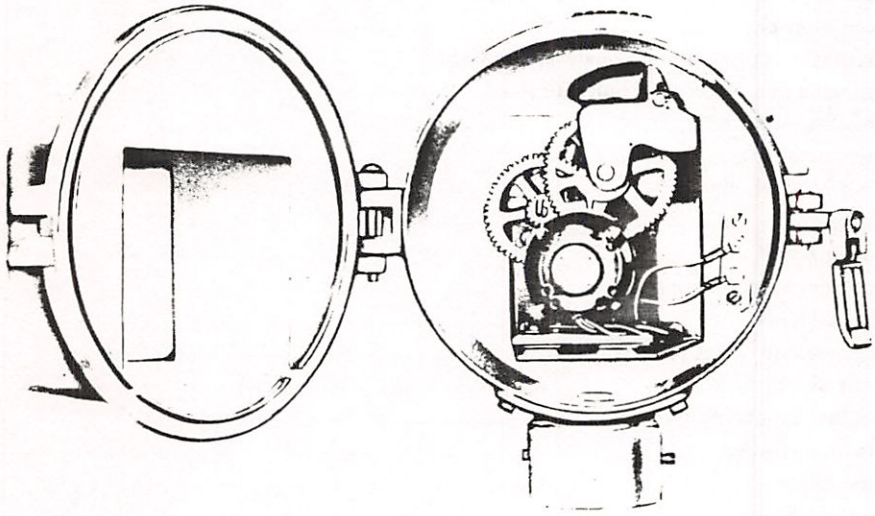

The Type 555 Gong Type Crossing Bell is of the same general appearance as the Type 222 Bell except that the hinged cover is enlarged to house the motor driven mechanism, consisting of a motor, two gears and a bell hammer. A cam mounted on one of the gear wheels engages and raises a weight to a certain point and then, due to gravity, allows it to drop. The bell hammer is connected to this operating weight by a shaft which causes the hammer to strike the gong a sharp heavy blow when the weight drops, giving a clear penetrating sound. The hammer blows are so timed that the sound waves of one blow are not broken up by subsequent waves.

This bell can be furnished for operation on any specified direct current voltage from 6 to 600; or for use on alternating current commercial lighting circuits of 115 or 230 volts, either 25 or 60 cycle, as specified.

Special versions of this bell have been developed for use on Diesel locomotives and on "Push-Pull" suburban passenger cars.

For illustrations and details see pages 5-16 & 5-17.

Ref. No.	Description	Piece No.
A	Type 555 Bell for mounting on top of 3½" I.D. pipe post. Specify D.C. voltage or A.C. voltage and frequency	0555B
A1	Same as Ref. A but for mounting on 4" I.D. pipe post	0555C
A2	Same as Ref. A but for mounting on 3" I.D. pipe post	0555D
A3	Same as Ref. A but for mounting on 5" I.D. pipe post	0555F
A4	Same as Ref. A but for mounting on 6" I.D. pipe post	0555H

Type 555C Bell can be mounted on the side of pole or flat surface by use of the Gooseneck Bracket shown on page 5-26.

(Continued)

REPLACEMENT PARTS

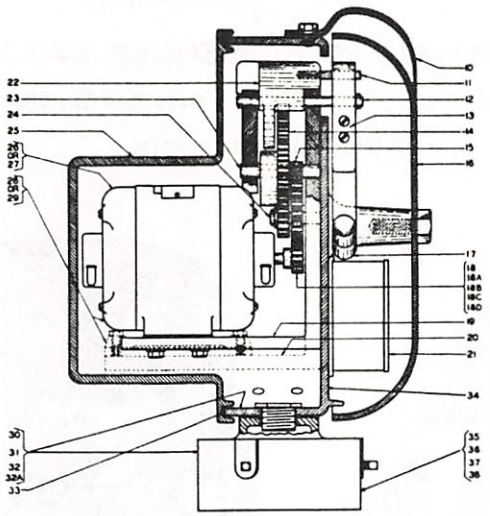

Cast aluminum parts furnished for the Case, Cover, Mounting Socket and Rain Shield are interchangeable with cast iron parts formerly used.

Ref. No.	Description	Piece No.
10	Rain Shield	1208-CA
11	Operating weight stud	1508-4
12	Operating weight shaft	1508-3
13	Hammer support	1508-2
14	Drive Gear	1410-1
15	Intermediate gear and pinion	1410-16
16	Steel gong	1211
17	Hammer with reinforcements	1210-17
18	Motor pinion 12 teeth 5/16" bore	1410-15
18a	Motor pinion 14 teeth 5/16" bore	1410-15A
18b	Motor pinion 16 teeth 5/16" bore	1410-15B
18c	Motor pinion 20 teeth 5/16" bore	1410-15C
18d	Motor pinion 14 teeth 3/8" bore	1410-15D
19	Frame (Bells after Serial No. 600)	1411-3-CA
20	Frame (Bells before Serial No. 601)	1411-1
21	Capacitor for 110 V. A.C. Motor	1508-19
21a	Capacitor for 230 V. A.C. Motor	1508-19A
22	Operating weight	1508-1
23	Drive gear shaft	1410-17
24	Intermediate gear stud	1508-14
25	Door complete with packing	1507-1
26	A.C. Motor (Bells after Serial No. 600) (Specify voltage and frequency)	0700-220
27	D.C. Motor (Bells after Serial No. 600) (Specify voltage)	0700-219
28	A.C. Motor (Bells before Serial No. 601) (Specify voltage and frequency)	1410-34
29	D.C. Motor (Bells before Serial No. 601) (Specify voltage)	1410-35
30	Case and socket assembly for mounting on 3½" I.D. pipe	1506-1A
31	Case and socket assembly for mounting on 4" I.D. pipe	1506-2A
32	Case and socket assembly for mounting on 3" I.D. pipe	1506-3A
32a	Case and socket assembly for mounting on 5" I.D. pipe	1506-4A
33	Door Packing	1217-2
34	Case for A.C. Bell	1506-CA
34a	Case for D.C. Bell	1506A-CA
35	Socket subassembly for 3" I.D. pipe	1206-3B-CA
36	Socket subassembly for 3½" I.D. pipe	1206-2B-CA
37	Socket subassembly for 4" I.D. pipe	1206-4B-CA
38	Socket subassembly for 5" I.D. pipe	1206-5B-CA
38a	Socket subassembly for 6" I.D. pipe	1206-6B-CA

Type 555ACN Motor Driven Bells

FOR DIESEL LOCOMOTIVES
OR
"PUSH-PULL" PASSENGER CARS
74 Volts D.C. or 115 Volts 60 Cycles
Typical Installations

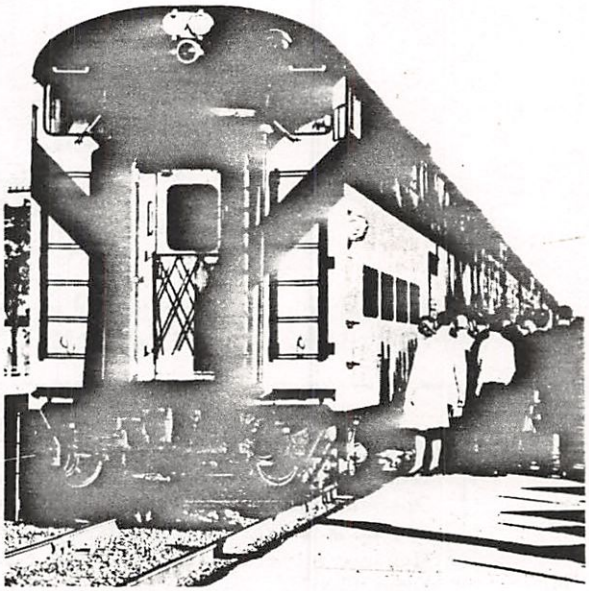

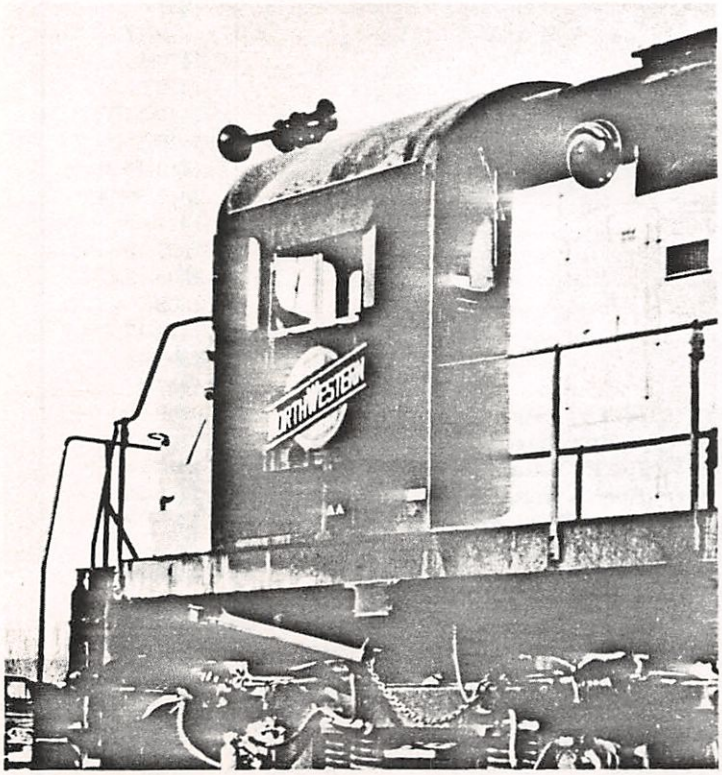

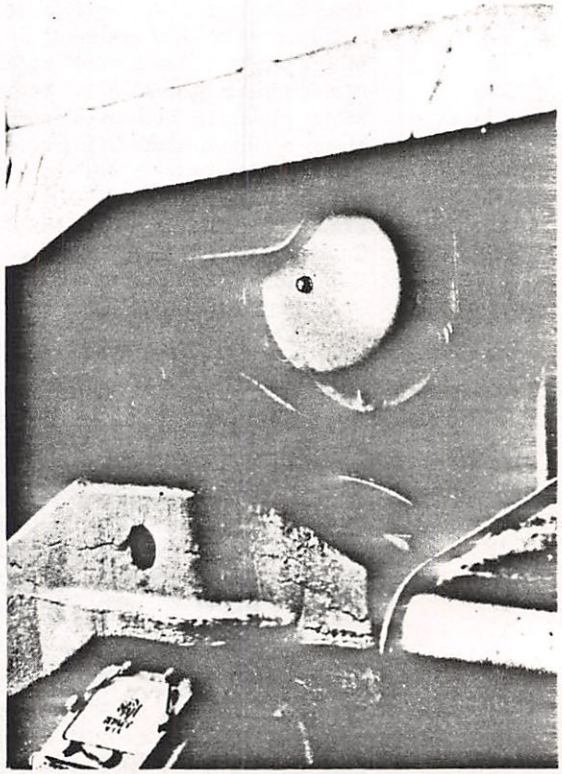

Type 555ACN Motor Driven Bells

FOR DIESEL LOCOMOTIVES and "PUSH-PULL" PASSENGER CARS

74 volts D.C. or 115 volts, 60 cycles

CAST ALUMINUM HOUSING 12" BELL-STEEL GONG

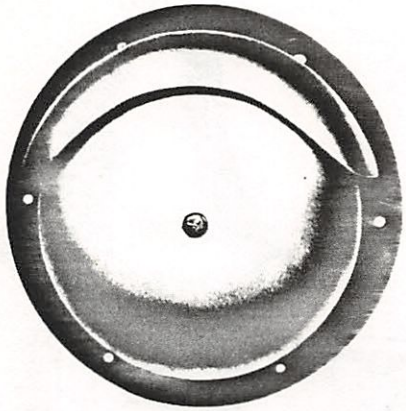

The Type 555ACN Gong Type Motor Driven Bell has an operating mechanism which is generally similar to that of the Type 555 Highway Crossing Bell, consisting of a 1/50 horsepower motor, two gears and a bell hammer. A cam mounted on one of the gear wheels engages and raises a weight to a certain point and then allows it to drop. The bell hammer is connected to the operating weight which causes the hammer to strike the bell-steel gong a sharp heavy blow when the weight drops, giving a clear penetrating sound. The hammer blows are so timed that the sound waves of one blow are not broken up by subsequent sound waves.

This type of mechanism is well adapted for use on Diesel locomotives, "Push-Pull" type passenger cars and other moving vehicles. Swaying and jolting motions do not interfere with the even spacing of the hammer blows which usually occurs with vibrating bells.

For "Push-Pull" cars and most locomotive applications the Type 555ACN-115 and Type 555ACN-74 bells are used. They have a flange for mounting the bell in the bulkhead with the gong on the outside and the mechanism on the inside for easy access for service and inspection.

The Type 555ACN-74C Bell has a cover to enclose the mechanism so that the entire bell may be mounted externally, as below the running board on a locomotive, or similar location.

Type 555ACN-115 Bell is equipped with an A.C. motor for operation from the 115 volt, 60-cycle, car lighting circuit.

Type 555ACN-74 and Type 555ACN-74C Bells are equipped with 74 volt D.C. motors for operation from the Diesel engine starting battery.

Ref. No.	Description	Piece No.
A	Type 555ACN Motor Driven Bell, bulk-head mounting, for 115 volt, 60 cycle operation	0555ACN-115
A1	Same as Ref. A but for 74 volt D.C. operation	0555ACN-74
B	Type 555ACN-74C Motor Driven Bell, fully enclosed, for 74 volt D.C. operation	0555ACN-74C

Type AL-50 Locomotive Type Bell
Motor Driven

For 10 or 110 Volts D.C. and 115 or 230 Volts A.C., 25 or 60 cycles

16" LOCOMOTIVE GONG

Approximately 32 Strokes Per Minute

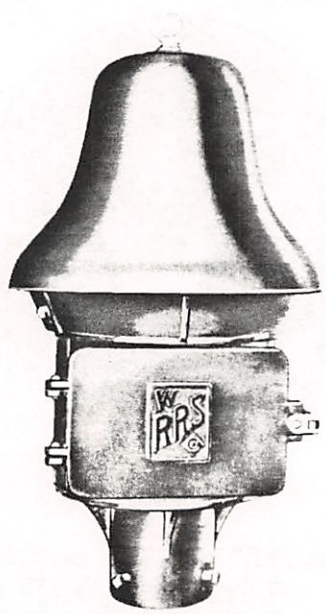

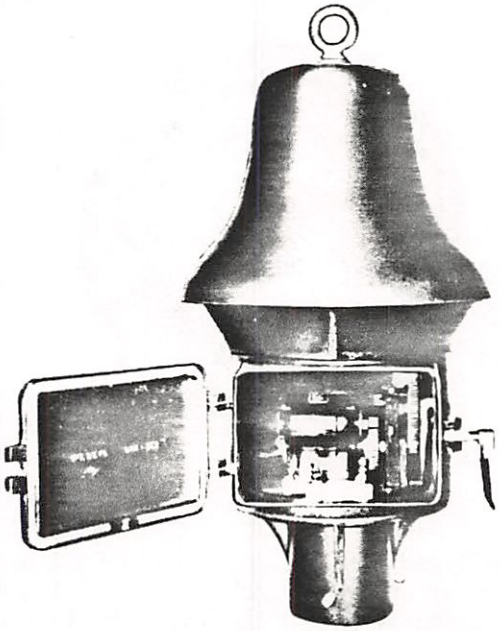

The Type AL-50 Motor Driven Locomotive Type Bell is particularly adapted for use where a very penetrating audible warning is required, as in industrial areas and inside plants or mills with high ambient noise level.

The mechanism is extremely simple, consisting of a motor and a train of gears to drive a cam to raise a weight, which, being attached to the clapper, delivers heavy, evenly-timed blows to the inside of the 16" bell-steel gong. The motor and gears are mounted on a removable base.

The bell may be equipped with a motor to operate on any commercial A.C. voltage and frequency or on 10 volts or 110 volts D.C., as specified.

Ref. No.	Description	Piece No.
A	Type AL-50 Locomotive type bell for mounting on top of 4" I.D. pipe post. (Specify D.C. voltage or A.C. voltage and frequency)	AL-50C
A1	Same as Ref. A but for mounting on 5" I.D. pipe post	AL-50F

Type AL-50C Bell can be mounted on the side of pole or flat surface by use of the Gooseneck Bracket shown on page 5-26.

For Replacement Parts Listing see opposite page

Type AL-50 Locomotive Type Bell

REPLACEMENT PARTS

For bells with 3-piece mechanism housing

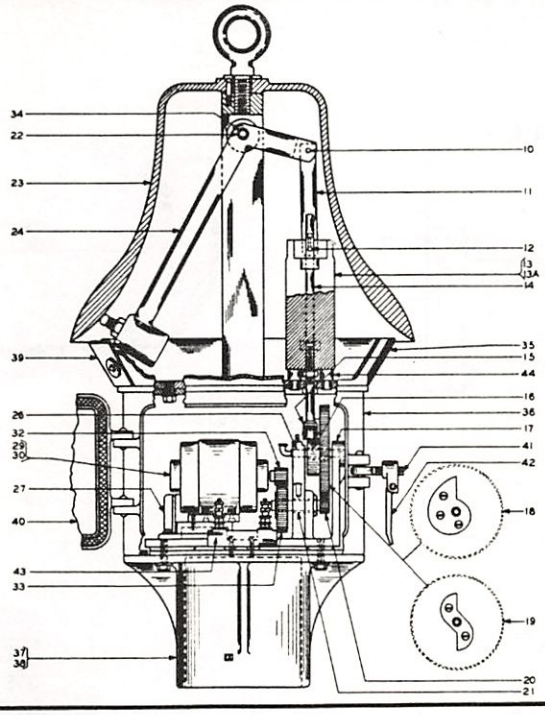

Ref. No.	Description	Piece No.
10	Connecting link pin	0050-18
11	Connecting link	0050-26
12	Operating weight pin	0050-32
13	Operating weight with bumpers (For Bells shipped before April 15, 1957.)	0050-5
13a	Operating weight only (For Bells shipped after April 15, 1957.)	0050-51A
14	Guide stud	0050-20
15	Roller assembly	0050-10
16	Bushing	0050-16
17	Mechanism frame	0050-3
18	Drive gear and single step cam	0050-33
19	Drive gear and double step cam	0050-34
20	Shaft gear	0050-24
21	Bushing	0050-15
22	Bushing	990-13
23	Steel gong	990-11
24	Clapper complete	0050-23
26	Gear shaft with oil cup	0050-35
27	Capacitor for 115 Volt A.C. motor	0700-210
27a	Capacitor for 230 Volt A.C. motor	0700-210A
29	D.C. motor (specify voltage)	Dg. 0050-28
30	A.C. motor (Specify voltage and frequency)	Dg. 0050-29
32	Motor pinion	0050-25
33	Connecting gear	0050-7
34	Clapper pivot pin	990-31
35	Gong Support	990-150A
36	Mechanism housing	990-152A
37	Base socket for 4" pipe post	990-154A
38	Base socket for 5" pipe post	990-155A
39	Hand hole cover with screws	990-156B
40	Housing cover with packing	990-151B
41	Hasp eye bolt	1410-11
42	Locking hasp	1410-30
43	Terminal Strip	1056-14
44	Bumper	0050-22

Mounting Fittings for Highway Crossing Bells

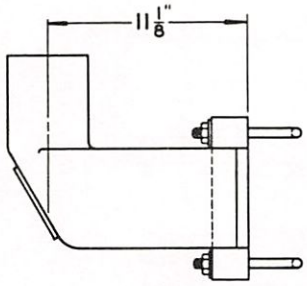

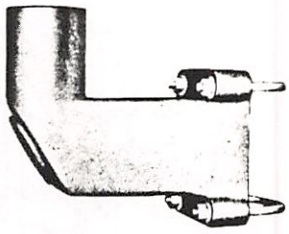

Gooseneck Bracket
Ref. A

Reducer
5" to 4" I.D. Pipe
Ref. B

Adaptor for Mounting
Bells on Flat Surfaces
Ref. C and D

Gooseneck Brackets are furnished for Bell Sockets 4½" I.D. (equivalent to 4" I.D. pipe post.) Gooseneck Brackets may be used with bolts or lag screws to mount bells on the side of buildings or other vertical surfaces.

Ref. No.	Description	Piece No.
A	Type 873 Gooseneck Bracket complete with "U" bolts for 4" I.D. Pipe Mounting	873-29B
A1	Same as Ref. A but for 3½" I.D. pipe mounting	873-28B
A2	Same as Ref. A but for 5" I.D. pipe mounting	873-30B
A3	Same as Ref. A but for 3" I.D. pipe mounting	873-27B
A4	Same as Ref. A but for 6" I.D. pipe mounting	873-31B
A5	Same as Ref. A but for 8" I.D. pipe mounting	873-32B
B	Reducer for 5" to 4" I.D. pipe	990-63
C	Adaptor for mounting bell with socket for 4" I.D. pipe on top of any flat surface	216-2
D	Adaptor for mounting bell with socket for 3" I.D. pipe on top of any flat surface	216-3

TERMINAL HOUSING

CONTENTS

	Page No.
Terminal Housings (Pedestal Type)	6-3 to 6-13
Pole Terminal Housings	6-15 to 6-22
Flexible Connections	6-23
Padlocks	6-24

WC Hayes
WESTERN-CULLEN-HAYES, Inc.
2700 West 36th Place • Chicago, Illinois 60632 • Telephone: 312/254-9600 • Telex 25-3206

Type 1155 Terminal Housing

Type 1155 Terminal Housing is made of cast iron and can hold as many as four A.A.R. Terminals which may be installed in the head casting. Different kinds of connectors and bushings can be used. Standard height, 17″ overall; riser, 2″ I.D.; head 5″ sq. by 3¼″ deep. A riser is also available to provide 24″ overall height, if specified.

Ref. No.	Description	Piece No.
A	Type 1155 Terminal Housing with two fibre bushings and one A.A.R. terminal block	1155-187
A1	Same as Ref. A but with two A.A.R. terminal blocks	1155-188
A2	Same as Ref. A but with three A.A.R. terminal blocks	1155-189
B	Type 1155 Terminal Housing with two 3/4″ pipe tap holes, one on each side, for flexible metal conduit connection	1155-126
C	Type 1155 Terminal Housing with one 14″ long rubber house, one 2-post terminal strip and one 3-post terminal strip	1155-143
E	Type 1155 Terminal Housing with two connectors (for .750″ to .812″ dia. cable), one on each side and two 4-post terminal strips	1155-163
F	Type 1155 Terminal Housing with two cable grips (for .375″ to .500″ dia. cable) on one side	1155-176
G	Type 1155 Terminal Housing with two porcelain bushings (Federal A2) on one side and one A.A.R. terminal block	1155-158
H	Type 1155 Terminal Housing with one $1\frac{5}{16}$″ dia. hole on one side and with two 4-post terminal strips	1155-131
H1	Same as Ref. H but with one 1″ pipe tap hole	1155-131A
H2	Same as Ref. H but with two 1″ tap holes with one on each side	1155-131B
H3	Same as Ref. H but with two 1″ pipe tap holes on one side	1155-131C
J	Type 1155 Terminal Housing with one 1″ squeeze connector and one A.A.R. terminal block	1155-171
J1	Same as Ref. J but with two A.A.R. terminal blocks	1155-172
J2	Same as Ref. J but with three A.A.R. terminal blocks	1155-173
J3	Same as Ref. J but with four A.A.R. terminal blocks	1155-174
J4	Same as Ref. J but with one 1½″ squeeze connector and four A.A.R. terminal blocks	1155-175
J5	Same as Ref. J but less A.A.R. terminal block	1155-170
J6	Same as Ref. J but less connector and with four A.A.R. terminal blocks	1155-175A
K	Type 1155 Terminal Housing with one connector (for .500″ to .625″ dia. cable) and one A.A.R. terminal block	1155-155A
K1	Same as Ref. K less connector	1155-155B
L	Type 1155 Terminal Housing with one connector (for .500″ to .625″ dia. cable) and two A.A.R. terminal blocks	1155-161
L1	Same as Ref. L but with one A.A.R. terminal block	1155-161A
M	Type 1155 Terminal Housing with one 1½″ straight squeeze connector and one A.A.R. terminal block	1155-110F
N	Type 1155 Terminal Housing with one 1½″ straight squeeze connector and five 2-post terminal blocks (1″ c.c.)	1155-145
P	Type 1155 Terminal Housing with one fibre bushing less pipe and base	1155-157
P1	Same as Ref. P plus No. 7321 resistance unit	1155-157R

Replacement parts list on following page

Type 1155 Terminal Housing

Ref. No.	Description	Piece No.
	REPLACEMENT PARTS	
1	Pipe and Base sub-assembly for 17" overall height	1155-58
1A	Same as Ref. 1 but for 24" overall height	1155-58F
2	A.A.R. terminal block with connector	1056-5
2A	Same as Ref. 2 less connector	1056-10
3	Terminal strips with two terminal posts	2508-102
3A	Same as Ref. 3 but with three terminal posts	2508-103
3B	Same as Ref. 3 but with four terminal posts	2508-104
4	1" terminal block with connector	2506-102
5	Resistance Unit	7321
6	Top casting for Ref. H	1155-123K2
6A	Top casting for Ref. H1	1155-23UA
6B	Top casting for Ref. H2	1155-123L4
6C	Top casting for Ref. H3	1155-23BL
6D	Top casting for Ref. B	1155-123C4
6E	Top casting for Ref. C	1155-23S
6F	Top casting for Ref. E	1155-23CL
6G	Top casting for Ref. F	1155-23AZ
6H	Top casting for Ref. G	1155-23W
6J	Top casting for Ref. A, A1, A2	1155-123E4
6K	Top casting for Ref. J, J1, J2, J3	1155-123H2
6L	Top casting for Ref. J4, J6, L	1155-123K2
6M	Top casting for Ref. J5	1155-123H1
6N	Top casting for Ref. K	1155-123C2
6P	Top casting for Ref. K1	1155-123
6R	Top casting for Ref. L & L1	1155-123B2
6T	Top casting for Ref. M	1155-23CX
6U	Top casting for Ref. N	1155-23MA
7	Cover	1155-122
8	Connector for .750" to .812" dia. cable Ref. E	
8A	Connector for .375" to .500" dia. cable Ref. F & K	
8B	Connector for .500" to .625" dia. cable Ref. J	
9	1" Straight Squeeze Connector Ref. J & L	
9A	1½" Straight Squeeze Connector Ref. J & M	
10	Porcelain Bushing for .4687" to .8125" dia. cable Ref. G	
11	Fibre Bushing 1/2" I.D. Ref. A	1165-12
11A	Fibre Bushing, 1/4" I.D. Ref. P	1165-12B
12	Retaining Spring for fibre bushing Ref. A & N	531
13	Eyebolt	1247-4
14	Wing Nut	1247-5
15	3/16" dia. x 1½" lg. Rd. Hd. Rivet (brass)	
16	7/16" dia. x 18" lg. Torchwick packing	
17	337" I.D. x 7/8" O.D. plain washer (brass)	
18	3/8" x 5/8" lg. cup point set screw (steel)	
19	No. 10 - 32 x 3/4" lg. Rd. Hd. Machine Screw (brass)	
20	Bushing—2" dia. conduit for Ref. C	
21	Lock Nut—2" dia. conduit for Ref. C	
22	Clamp for Ref. C	1143-24
23	Sleeve, for Ref. C (steel)	1143-25
24	Rubber hose—3 ply, 1¼" I.D. x 1¾" O.D., 14" lg. for Ref. C	
25	1/4" - 20 x 1¾" lg. Hex. Hd. Cap. Scr. for Ref. C (steel)	
26	1/4" - 20 Hex. Nut for Ref. C (steel)	
27	Mach. Screw No. 8-32 x 1/4" lg. Rd. Hd. for Ref. C	
28	Cover Plate for Ref. C	
29	3/4" std. lock nut for Ref. E	
30	Bracket, Dilecto Grade M for Ref. P	1155-26
31	Washer, Dilecto Grade L for Ref. P	0300-241
32	No. 10 - 32 x 1¾" lg. Rd. Hd. Mach. Screw for Ref. P	

Type 1155 Terminal Housing

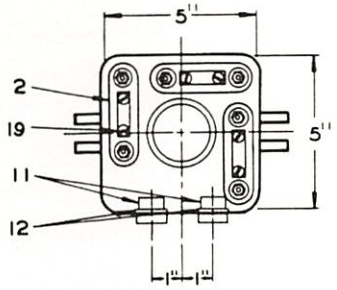

Ref. A

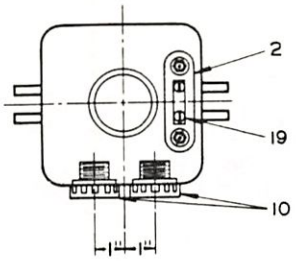

Ref. G

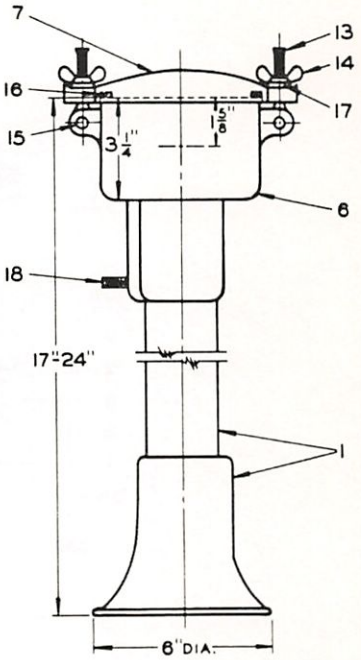

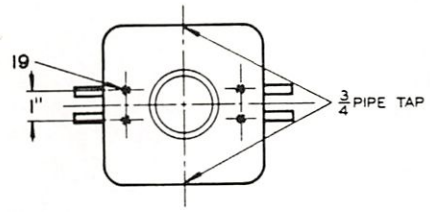

Ref. B

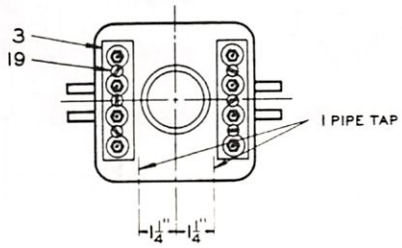

Ref. H

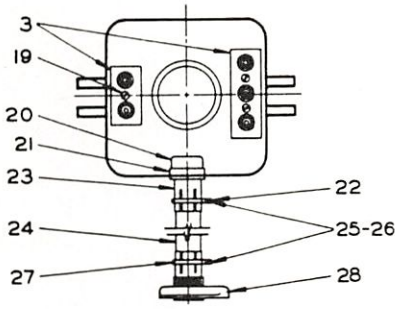

Ref. C

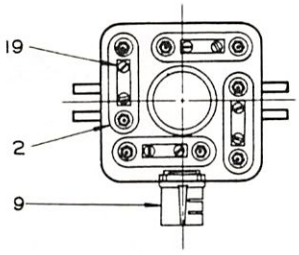

Ref. J

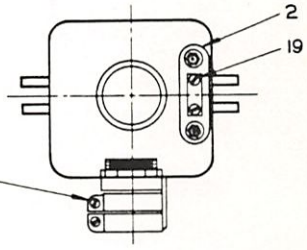

Ref. M

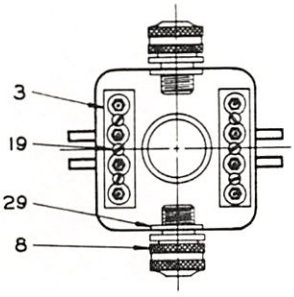

Ref. E

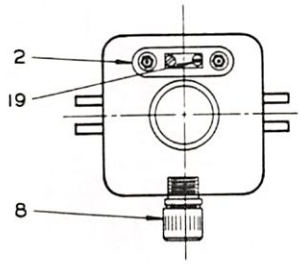

Ref. K

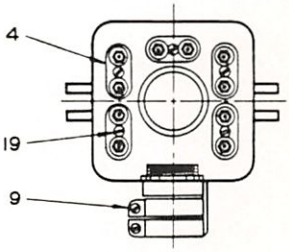

Ref. N

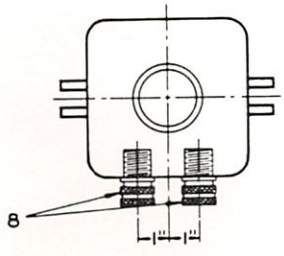

Ref. F

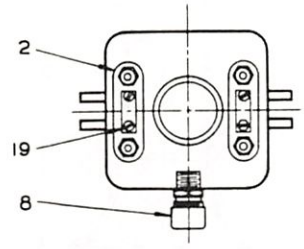

Ref. L

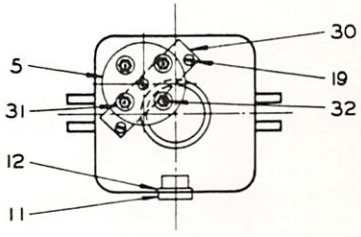

Ref. P

Type 1182 Terminal Housing

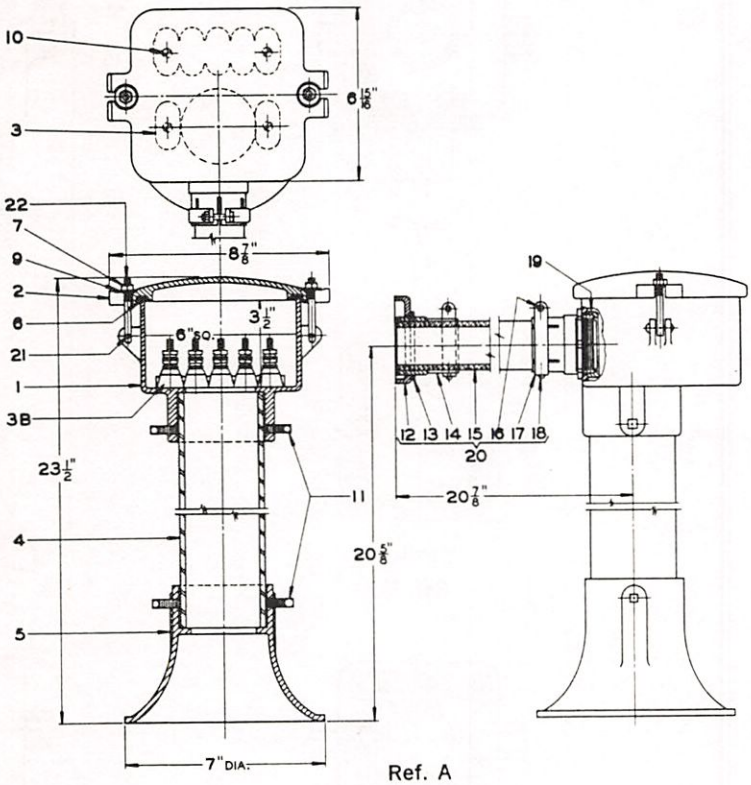

Ref. A

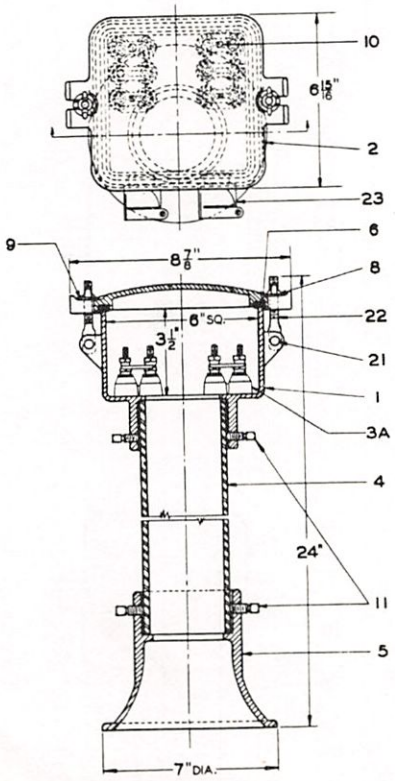

Ref. B

Type 1182 Terminal Housing

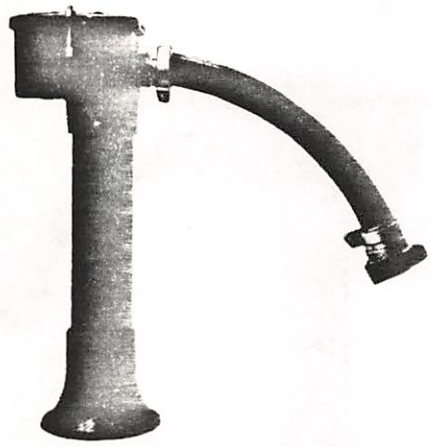

The 1182 Terminal Housing has the Riser offset leaving mounting space for more terminals in the box. Terminals, Connectors and Riser other than those listed can be furnished if specified on order.

Ref. No.	Description	Piece No.
A	Type 1182 Terminal Housing, complete with flexible connection for U.S. & S. Co. Switch Circuit Controller and eight Terminal Blocks	1182-22
B	Type 1182 Terminal Housing, complete with two 1/2" straight squeeze connectors and six Terminal Blocks	1182-10A
	REPLACEMENT PARTS	
1	Top Casting for Ref. A	1182-11E
1A	Top Casting for Ref. B	1182-11G
2	Cover	1182-12
3	Terminal Block for Ref. A	2506-102
3A	Terminal Block for Ref. B	2506-106
3B	Terminal Block for Ref. A	2506-110
4	3" I.D. x 15" lg. std. pipe	
5	Foot	1103-12
6	1/2" dia. x 24" lg. Torchwick packing	
7	5/16" - 18 hex. nut	
8	Wing Nut	1247-5
9	5/16" plain washer, stl.	
10	No. 10—32 x 5/8" lg. rd. hd. machine screw, brass	
11	3/8"—16 x 3/4" lg. cup point set screw, stl.	
12	Cover plate	1705-18
13	2" conduit locknut	
14	Sleeve	1182-25
15	2" O.D. x 1½" I.D. Rubber hose 19½" lg.	
16	1/4" - 20 x 1¾" lg. hex. hd. mach. screw and hex. nut, stl.	
17	Clamp	1182-15
18	No. 8-32 x 1/4" lg. rd. hd. mach. screw, brass	
19	2" conduit bushing	
20	Flexible Connector, complete with cover for U-5 switch circuit controller, includes items 12 to 18	1182-24U
21	3/16" x 1¼" lg. rd. hd. rivet, brass	
22	Eye bolt	1247-6
23	1/2" straight squeeze connector	

Type 1143 Terminal Housing

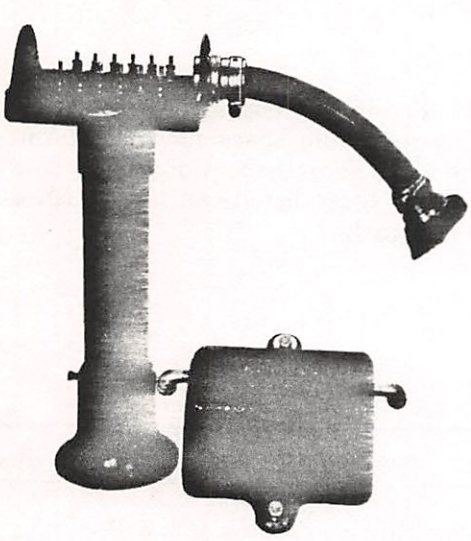

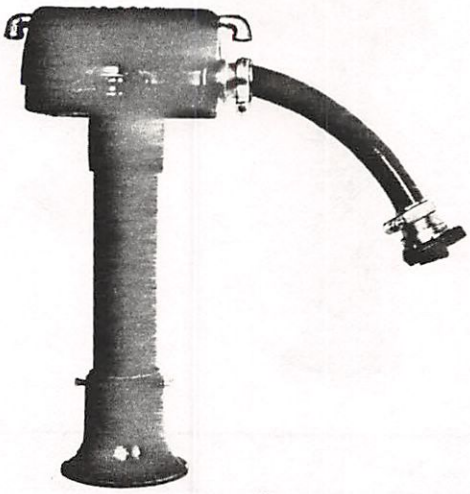

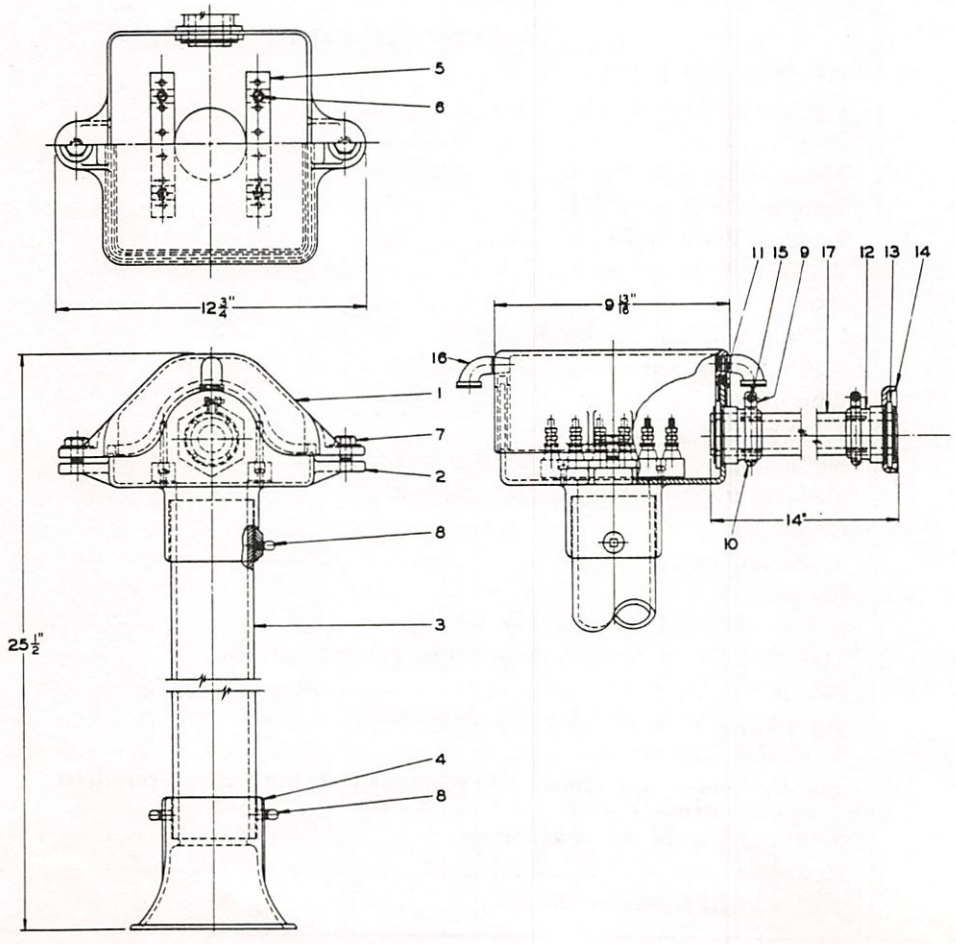

Type 1143 Terminal Housing

Type 1143 Terminal Housing has a rounded top cover and is furnished with two 6-post terminal strips and one 1¼" I.D. x 14" long rubber hose connection with cover plate for specified switch circuit controller.

It may also be equipped, as required, for use with switch machines and other similar apparatus.

Ref. No.	Description	Piece No.
A	Type 1143 Terminal Housing with one outlet complete with rubber hose and cover plate for connecting to U.S. & S., U.5 switch circuit controllers	1143-1
A-1	Same as Ref. A but for G.R.S. Model 5 circuit controllers	1143-1A
	REPLACEMENT PARTS	
1	Cover	1143-13
2	Top Casting	1143-11
3	3" Std. Pipe 15" long (steel)	
4	Foot casting	1103-12
5	Terminal Strip (6 post)	2508-106
6	No. 10-32 x 5/8" lg. rd. hd. mach. scr. (brass)	
7	1/2" - 13 x 1¼" lg. hex. hd. cap, scr. and 2 washers (cadmium plated)	
8	3/8" - 16 x 1/2" lg. sq. hd. cup point set scr. (cadmium plated)	
9	2" I.D. Clamp	1143-15
10	No. 8-32 x 1/4" lg. rd. hd. mach. scr. (cadmium plated)	
11	3/8" Torchwick packing 38" lg.	
12	Sleeve	1143-25
13	2" std. conduit lock nut	
14	Cover plate for US&S U-5 switch circuit controller	1705-1B
14A	Cover plate for GRS Model 5 switch circuit controller	1702-1B
15	1/4"-20 x 1¾" lg. hex hd. mach. scr. and hex nut	
16	Ventilator	1143-16
17	1¼" I.D. x 1¾" O.D. 3 ply Rubber hose	

Type 1233 Terminal Housing

Ref. A

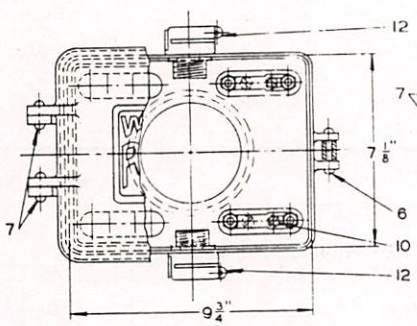

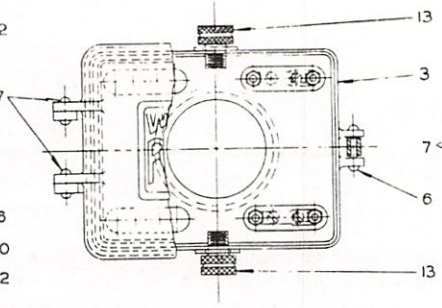

Ref. B

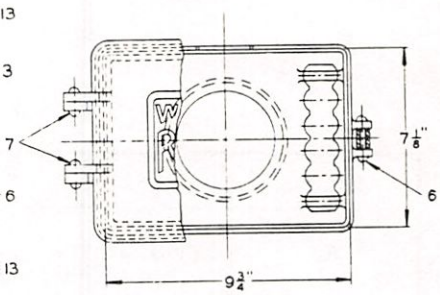

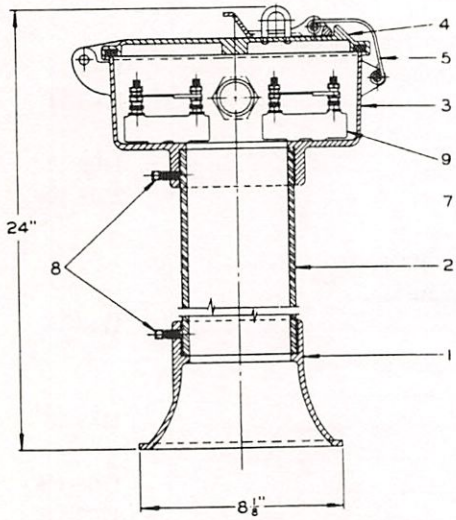

Ref. A

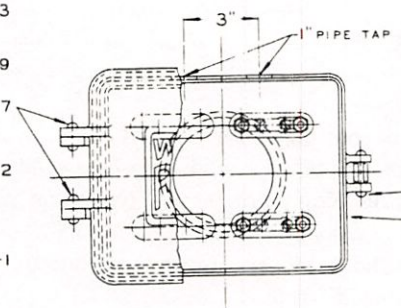

Ref. C

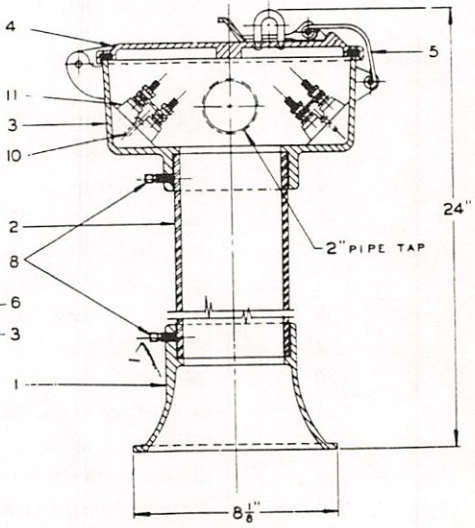

Ref. D

Type 1233 Terminal Housing

Type 1233 Terminal Housing consists of a terminal box 9⅜" x 6¾" x 3⅝" deep in which as many as 24 A.A.R. binding posts can be provided (either 12 No. 10565 A.A.R. Terminal Blocks or 2 Type 2506 Twelve post Multiple Unit Terminal strips.) Pipe riser is four inches inside diameter. Overall height is 24 inches.

When required, a squeeze connector (specify size) will be mounted in one or two sides of the terminal box.

Standard assemblies call for 4 No. 10565 A.A.R. Terminal Blocks or 2 Type 2506 Twelve-Post Multiple Unit Terminal Strips. Other combinations of terminals can be furnished if specified on order.

Ref. No.	Description	Piece No.
A	Type 1233 Terminal Housing complete with four A.A.R. terminals No. 1056-5E and two 1" squeeze connectors, one on each side	1233-4E
A1	Same as Ref. A less 1" squeeze connector but drilled for same	1233-4EA
A2	Same as Ref. A but with two 3/4" squeeze connectors, one on each side	1233-4F
A3	Same as Ref. A less squeeze connectors, but drilled for two 1" connectors	1233-4
B	Type 1233 Terminal housing complete with four A.A.R. terminals No. 1056-5E and two 3/4" cable grips for .437" to .562" OD Cables	1233-4J
C	Type 1233 Terminal Housing complete with four A.A.R. terminals No. 1056-5E and two 1" pipe taped holes on one side	1233-4G
D	Type 1233 Terminal Housing complete with twelve A.A.R. terminals No. 2506-112 and one 2" pipe taped hole	1233-12K
D1	Same as Ref. D but with two 1" pipe taped holes, one on each side	1233-12ER
D2	Same as Ref. D but with one 1" pipe taped hole	1233-12EP
D3	Same as Ref. D less pipe taped hole	1233-12
D4	Same as Ref. D but drilled for one 3/4" squeeze connector	1233-12B
D5	Same as Ref. D but drilled for one 1" squeeze connector	1233-12C
D6	Same as Ref. D but drilled for one 1¼" squeeze connector	1233-12D
D7	Same as Ref. D but drilled for one 1½" squeeze connector	1233-12E
D8	Same as Ref. D but complete with one 2" squeeze connector	1233-12F

Replacements Parts List on following page

Type 1233 Terminal Housing

Ref. No.	Description	Piece No.
	REPLACEMENT PARTS	
1	Foot Casting	A-233-2
2	4" Standard Pipe, 15" lg.	
3	Case for Ref. A & A1	1233-1HA
3A	Case for Ref. A2 & B	1233-1L
3B	Case for Ref. A3	1233-1
3D	Case for Ref. C	1233-1K
3E	Case for Ref. D1	1233-1J
3F	Case for Ref. D2	1233-1JA
3G	Case for Ref. D3	1233-1A
3H	Case for Ref. D4	1233-1B-1
3J	Case for Ref. D5	1233-1B-2
3K	Case for Ref. D6	1233-1B-3
3L	Case for Ref. D7	1233-1B-4
3M	Case for Ref. D8	1233-1B-5
4	Cover with staple and packing	1265-5X
5	Hasp complete	1265-40
6	5/16" x 1¾" lg. rd. brass rivet	
7	1/4" x 1" lg. rd. brass rivet	
8	3/8" x 3/4" lg. steel cup point set screw	
9	A.A.R. Terminal Block	1056-5
10	No. 10-32 x 3/4" lg. rd. hd. mach. screw brass	
11	A.A.R. Terminal Strip	2506-112
12	3/4" Squeeze Connector	
12A	1" Squeeze Connector	
12B	1¼" Squeeze Connector	
12C	1½" Squeeze Connector	
12D	2" Squeeze Connector	
13	3/4" Cable grip for .437" to .562" O.D. cable	

Type 1183 Terminal Housing

Type 1183 Terminal Housing is made of cast iron and can hold as many as four A.A.R. Terminals which may be installed in the head casting. Different kinds of connectors and bushings can be used. Standard height, 22¾" overall; riser, 2" I.D.; head 4⅜" x 7⅜" x 3¾" deep.

Ref. No.	Description	Piece No.
A	Type 1183 Terminal Housing complete with two No. 2508-106 A.A.R. Terminal Strip and four test links and two ventilators	1183-94
B	Type 1183 Terminal Housing complete with four No. 1056-5 A.A.R. Terminal Blocks and two cable grips for .625" to .750" O.D. cable	1183-80
B1	Same as Ref. "B" less terminal blocks but with two cable grips for .375" to .500" O.D. cable	1183-85
	REPLACEMENT PARTS	
1	Riser	1183-17
2	Case for Ref. A	1183-23K
2A	Case for Ref. B	1183-23G
3	Cover	1183-22
4	Eye Bolt	1247-6B
5	Wing Nut	1247-5
6	.337" I.D. x 7/8" O.D. Pl. washer	
7	3/16" dia. x 1½" lg. rd. hd. rivet	
8	3/8" - 16 x 3/4" lg. sq. hd. set screw, cup pt.	
9	5/16" plain washer	
10	5/16" - 18 Hex. nut	
11	Ventilator for Ref. A only	1143-16
12	3/8" sq., 22½" long, jute packing	
13	A.A.R. terminal strip for Ref. A only	2508-106
14	No. 10 - 32 x 5/8" lg. rd. hd. mach. screw brass	
15	Test switches for Ref. A only	280
16	A.A.R. Terminal Block	1056-5
17	No. 10 - 32 x 3/4" lg. rd. hd. mach. sc.	
18	Cable grip for .625" to .750" O.D. cable	
18A	Cable grip for .375" to .500" O.D. cable	

See illustrations on following page

Type 1183 Terminal Housing

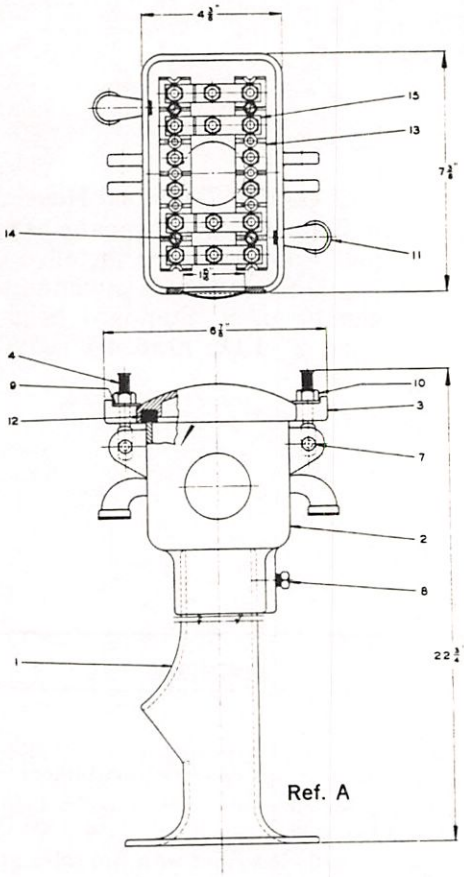

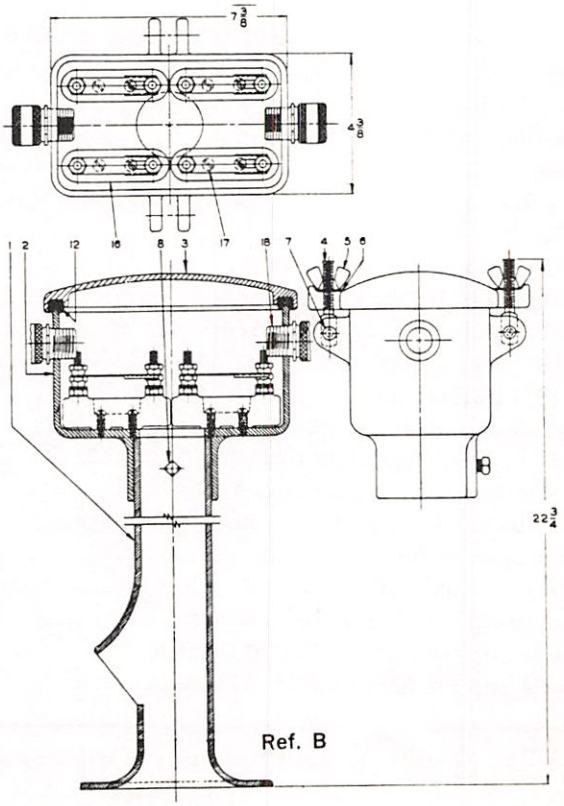

Type 1265 Terminal Housing

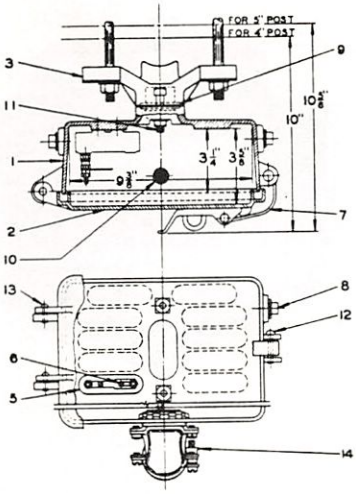

Ref. B

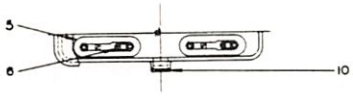

Ref. A

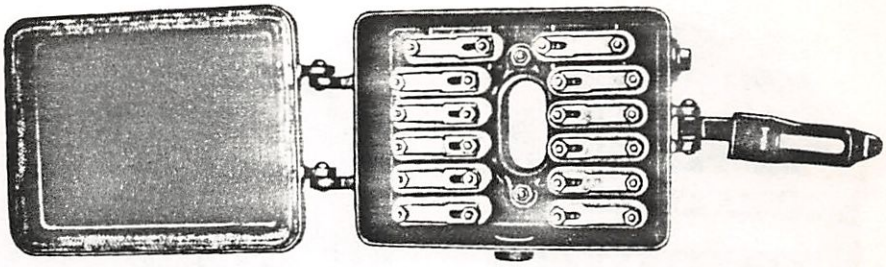

Ref. A

Type 1265 Terminal Box is provided for mounting on 4" or 5" I.D. pipe as specified. It contains 12 or less A.A.R. porcelain terminal blocks for the connection of parkway cables and the wires that run to flashing light signal units, bells, or other apparatus mounted on the pole. Furnished with 12 terminal blocks, unless otherwise specified.

Ref. No.	Description	Piece No.
A	Type 1265 Terminal Housing with 12 A.A.R. Terminal Blocks type 1056-5. (Specify for use on 4" or 5" I.D. pipe post)	1265
A1	Same as Ref. A but 8 A.A.R. Terminal Blocks type 1056-5 only	1265-B
A2	Same as Ref. A but 5 A.A.R. Terminal Blocks type 1056-5 only	1265-D
B	Type 1265 Terminal Housing with 10 A.A.R. Terminal Blocks type 1056-5 (unless otherwise specified) and one 2" 90° squeeze connector. (Specify for use on 4 or 5 inch I.D. pipe post	1265-20C
B1	Same as Ref. B less "U" bolt	1265-20CL
	REPLACEMENT PARTS	
1	Case for Ref. A	1265-1AC
1A	Case for Ref. A1	1265-1AD
1B	Case for Ref. A2	1265-1AE
1C	Case for Ref. B and B1	1265-1J
2	Cover	1265-5
3	Clamp	1265-102
4	"U" bolt for 4" pipe	3364-2
4A	"U" bolt for 5" pipe	3364-5
5	A.A.R. Terminal Block	1056-5
6	No. 10-32 x 3/4" lg. Rd. Hd. Mach. Scr. Brass	
7	Hasp Assembly	1265-40
8	1/2" Pipe Plug	
9	7/16" x 11" lg. Torchwick packing	
10	Ventilator for Ref. A, A1, and A2 only	1265-6A
11	1/2"-13 x 2" lg. Sq. Hd. bolt and hex nut	
12	5/16" x 1¾" lg. Rd. Hd. Rivet, brass	
13	1/4" x 7/8" lg. Rd. Hd. Rivet, brass	
14	2"-90° Squeeze Connector for Ref. B and B1 only	

Type 1228 Terminal Housing

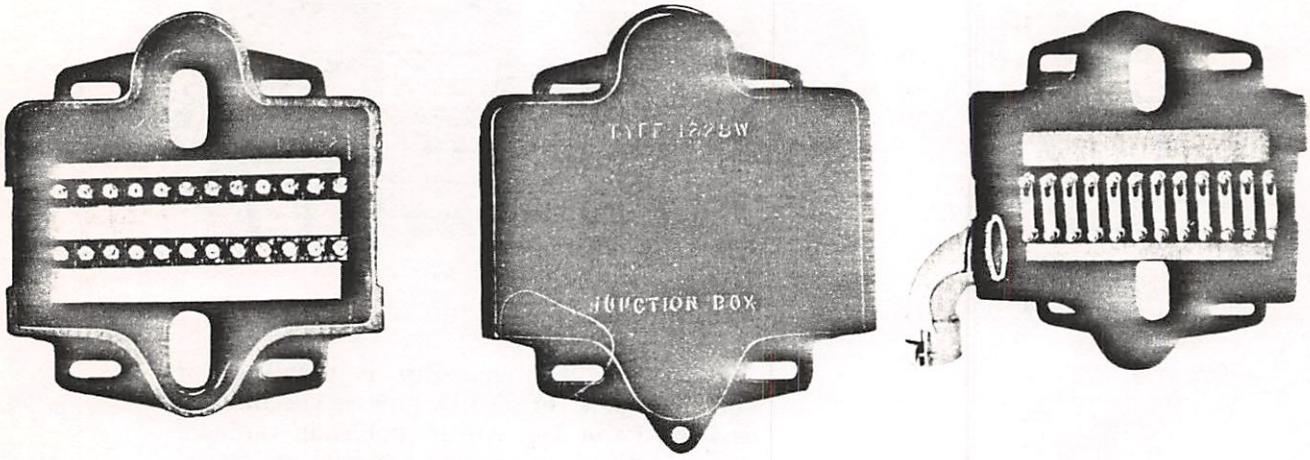

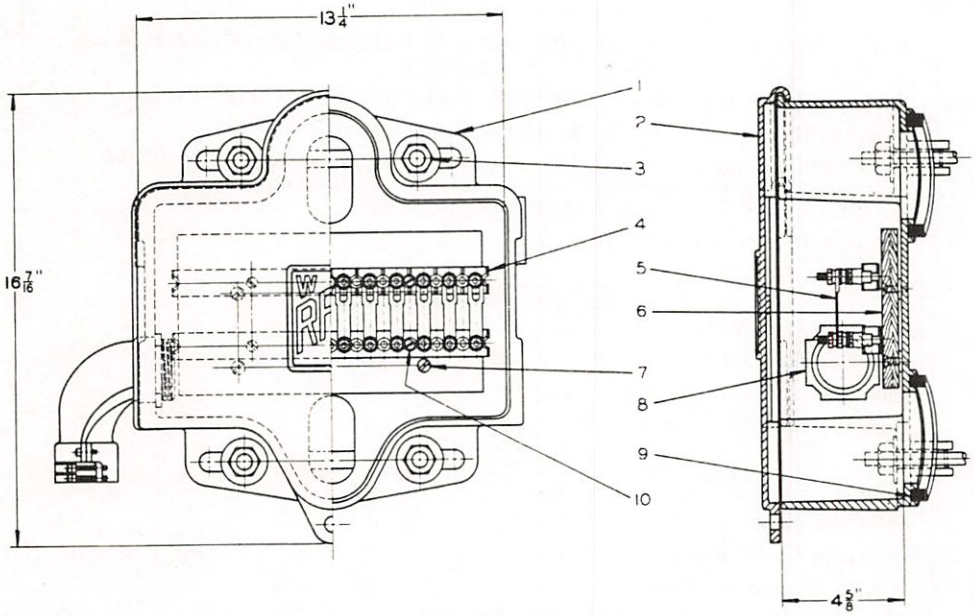

Type 1228 Terminal Housing

Type 1228 Terminal Housing is used for clamping to 4″, 5″, 6″ or 8″ pipe post. It has a slide cover which can be removed when raised 3″. It is especially useful for mounting behind a ladder where a terminal box with hinged cover would prove awkward.

A terminal board in the back provides for mounting terminals, resistors, etc. Two openings in the back permit easy entrance of cable and wires from the mast. (Specify I.D. of pipe post.)

Ref. No.	Description	Piece No.
A	Type 1228 W Terminal Housing, complete with one 2″-90° squeeze connector and two 12 post Terminal Strips	1228W
A1	Same as Ref. A less 2″-90° squeeze connector	1228WB
A2	Same as Ref. A less 2″-90° squeeze connector and the Terminals Strips	1228WBA
A3	Same as Ref. A less 2″-90° squeeze connector (for use on 15'0″ steel cantilever signal only)	1228WC
A4	Same as Ref. A but with one 1½″-90° squeeze connector	1228WP
	REPLACEMENT PARTS	
1	Case for Ref. A	1228-2A
1A	Case for Ref. A1	1228-2B
1B	Case for Ref. A3	1228-2C
1C	Case for Ref. A4	1228-2D
2	Cover	1228-3
3	4″ "U" Bolt with hex. nuts and washers	1228-13
3A	Same as Ref. 3 but 5″	3364-5
3B	Same as Ref. 3 but 6″	3364-34
3C	Same as Ref. 3 but 8″	3364-33
4	Terminal Strip	2508-112
5	Connector	1056-4
6	Wood Panel	1228-14
7	1/4″-20 x 1″ lg. csk flat hd. mach. screw	
8	2″-90° Squeeze Connector with conduit lock nut	
9	3/8″ x 5/8″ x 11⅜″ felt packing	
10	No. 10 x 1″ lg. rd. hd. wood screw, blued	

Type 1236 Pole Terminal Housing

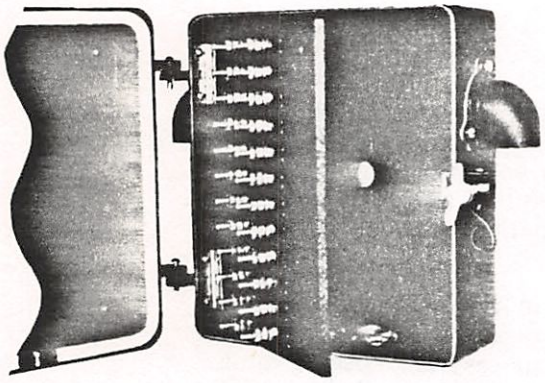

Ref. C

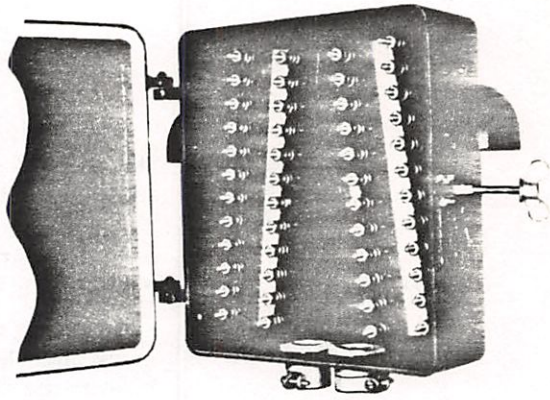

Ref. A

Type 1236 Pole Terminal Housing can be equipped with as many as 48 binding posts. A 7/8″ hole is provided in the back of the box for through bolt mounting on 4″ or larger diameter pipe or on wood poles.

Standard assembly, as illustrated above, includes four A.A.R. Type 1054 (WRRSCo. No. 2508-112) 12-post multiple unit terminal strips, two 1¼″ squeeze connectors and 2″ dia. hooded outlets on the sides of the box with fibre protective bushings.

Inside dimensions: 13¼″ high x 11¾″ wide x 4″ deep.

Terminal and squeeze connector combinations other than those listed can be furnished if specified on order.

The special design, with hinged terminal board, Ref. C., is an example of the versatility.

Ref. No.	Description	Piece No.
A	Type 1236 Pole Terminal Housing complete with two 1¼″ squeeze connectors and four No. 2508-112 A.A.R. terminal strips	1236-54
A1	Same as Ref. A but two No. 2508-112 A.A.R. terminal strips	1236-57
A2	Same as Ref. A less terminals	1236-50
A3	Same as Ref. A but with two 1½″ squeeze connectors	1236-52B
B	Type 1236 Pole Terminal Housing complete with one 1¼″ squeeze connector and two No. 2508-112 A.A.R. terminal strips	1236-52
B1	Same as Ref. B but with one 1½″ squeeze connector and four No. 2508-112 A.A.R. terminal strips	1236-54A
C	Type 1236 Pole Terminal Housing complete with two 1¼″ squeeze connectors and hinged ebony asbestos terminal board	1236-100

Replacement Parts shown on following pages

Type 1236 Pole Terminal Housing

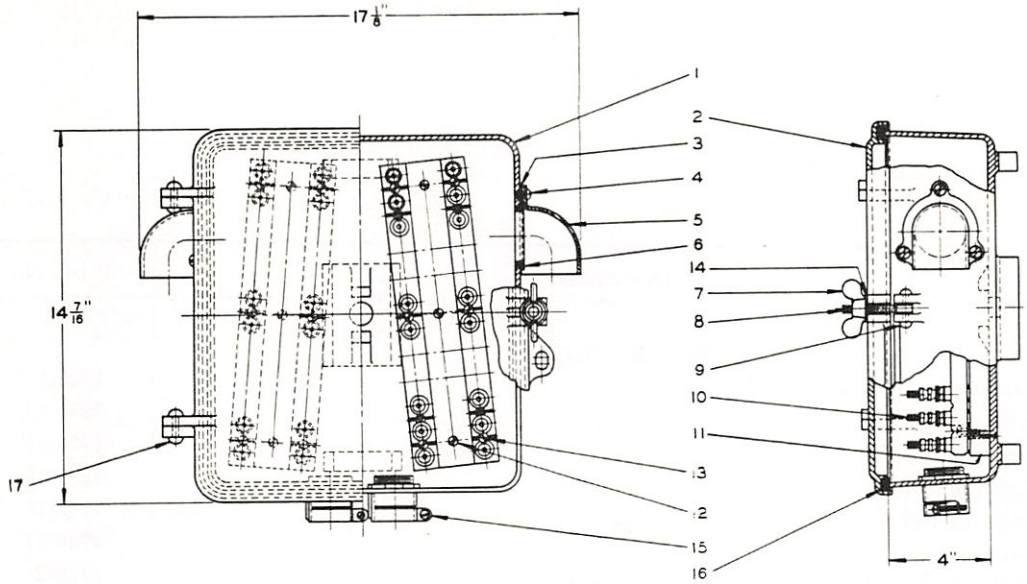

Ref. A

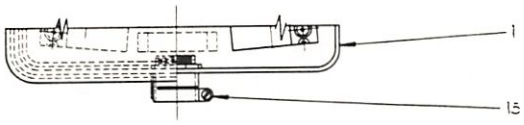

Ref. B

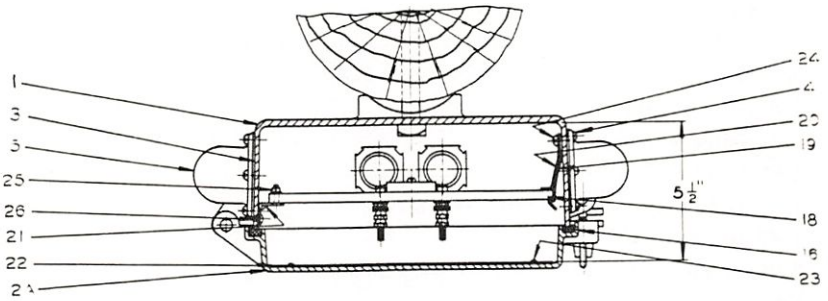

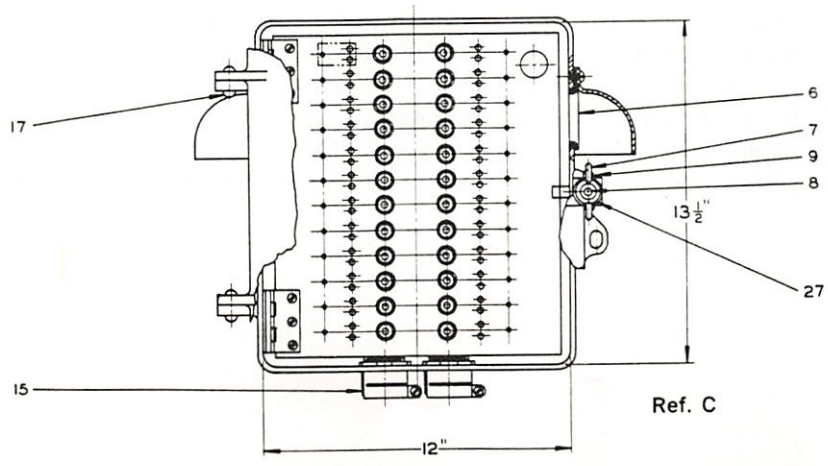

Ref. C

Type 1236 Pole Terminal Housing

Ref. No.	Description	Piece No.
	REPLACEMENT PARTS	
1	Case for Ref. A, A1, and A2	1236-1
1A	Case for Ref. B	1236-1A
1B	Case for Ref. B1	1236-1E
1C	Case for Ref. A3	1236-1G
1D	Case for Ref. C	1236-1C
2	Cover	1236-11
2A	Cover for Ref. C only	1236-21
3	Gasket	1232-18
4	1/4"-20 x 5/8" lg. rd. hd. mach. scr.	
5	Cable hood	1232-15
6	Bushing, Fibre	1232-19
7	Wing Nut	1247-7
8	Eye Bolt	1247-6
9	3/16" Rivet, 1⅜" lg.	
10	A.A.R. Terminal Strip	2508-112
11	3⅜" x 12" x 1" wood backboard	1236-12
12	No. 10-32 x 1" lg. fl. hd. mach. scr.	
13	No. 10-1" lg. blue, rd. hd. wood screw	
14	3/8" std. washer	
15	1¼" Squeeze Connector	
15A	1½" Squeeze Connector	
16	1/2" Dia. Trochwick packing 54" lg.	1236-24
17	1/4" Rivet 1" lg.	
18	Sub-assembly of ebony asbestos terminal board	1236-30
19	Spring Latch	1236-23
20	Spring Stop	1236-23A
21	2½" fast pin butt hinge	1236-28
22	Insulator	1236-27
23	Type "U" No. 6 x 1/4" lg. parker kalon rd. hd. drive scr.	
24	No. 10-32 x 5/16" lg. rd. hd. machine screw	
25	No. 10-32 x 5/8" lg. fl. hd. mach. scr. hex nut and pl. washer	
26	No. 10-32 x 1/4" lg. rd. hd. machine screw	
27	Washer, .337" I.D. x 7/8" O.D. x 1/16" thick	

Type 1232 Pole Terminal Housing

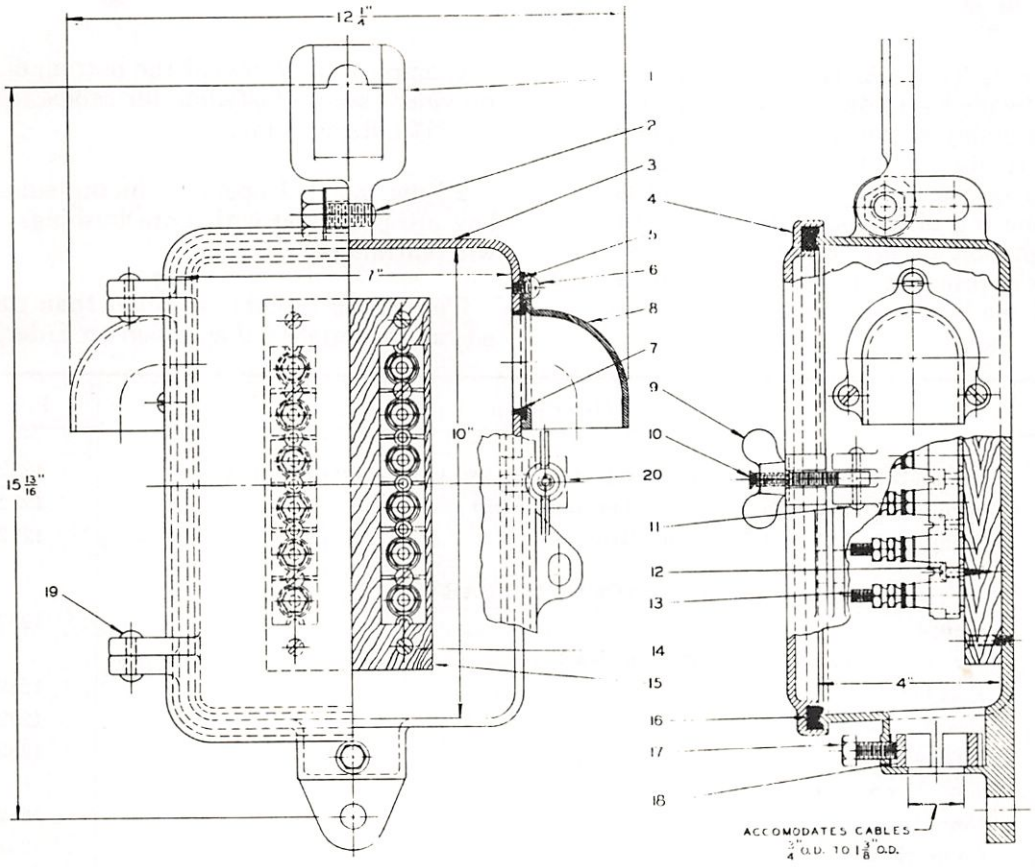

Type 1232 Pole Terminal Housing

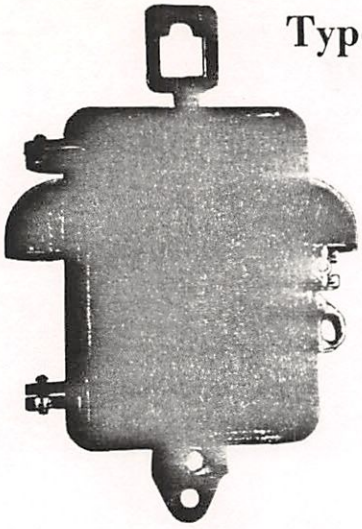

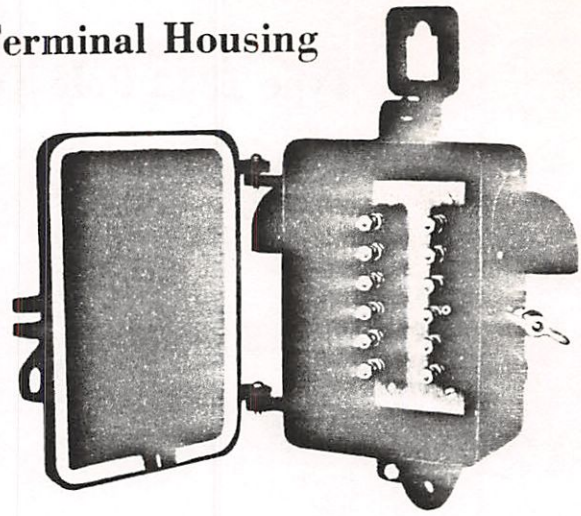

Type 1232 Pole Terminal Housing measures 10″ high by 7″ wide by 4″ deep inside measurements. The assembly shown above is equipped with two A.A.R. 6-post multiple unit terminal strips for connections. An adjustable hanger is furnished at the top of the box for attachment to the through bolt on the crossarm. A 5/8″ diameter hole is provided in the projection at the bottom of the box to secure the box to the pole.

Clamps in the recess at the bottom of the box provide a secure fastening for cables from 3/4″ to 1¼″ outside diameter.

2″ dia. hooded openings in the sides of the box are protected with fibre bushings, for line wire entrances.

Terminal combinations other than those listed can be supplied if specified on order.

Ref. No.	Description	Piece No.
A	Type 1232 Terminal Housing complete with two 6-post terminal strips	1232-53
A1	Same as Ref. A with one 6-post Terminal Strip	1232-51
A2	Same as Ref. A less Terminal Strips	1232-50
	REPLACEMENT PARTS	
1	Hanger	1232-16
2	No. 1/2″ - 13 x 1″ lg. cap scr. and washer	
3	Pole box	1232-1
4	Cover	1232-11
5	Gasket	1232-18
6	1/4″-20 x 5/8″ lg. rd. mach. scr.	
7	Fibre Bushing	1232-19
8	Cable Hood	1232-15
9	Wing Nut	1247-7
10	Eye Bolt	1247-6
11	3/16″ Rivet 1⅜″ lg., rd. hd.	
12	No. 10 x 1″ lg. blue rd. hd. wood scr.	
13	Terminal Strip	2508-106
14	No. 10-32 x 1″ lg. fl. csk. mach. scr.	
15	Mounting Board	1232-23
16	1/2″ dia. Torchwick Packing 36″ lg.	
17	3/8″-16 x 1″ lg. hex. hd. cap scr.	
18	Clamp Block	1232-17
19	1/4″ Rivet 1″ lg. rd. hd.	
20	Washer, 7/8″ O.D. x 337″ I.D. x .064″ thick	

Flexible Connections

Ref. A

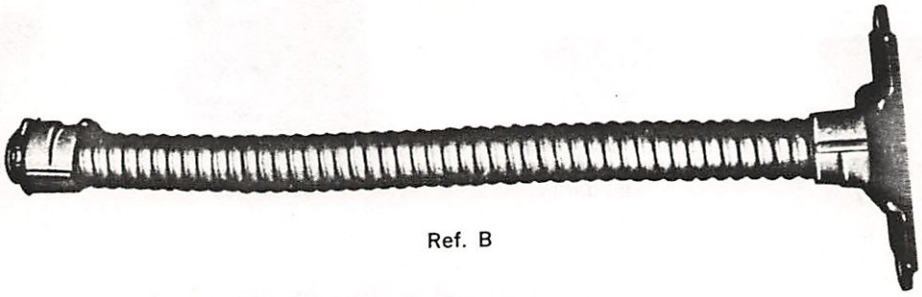

Ref. B

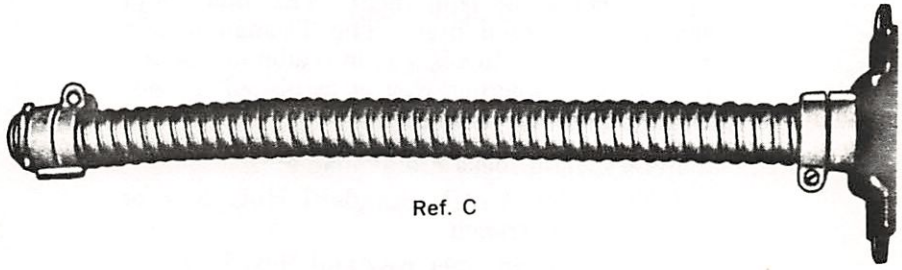

Ref. C

Flexible Connections with cover plates are provided for protection of flexible insulated wires between bootlegs and switch circuit controllers. They are available with either 1″ or 1½″ conduit. Type 1702 is designed for the G.R.S. Model 5 Switch Circuit Controller. Type 1705 is designed for the U.S. & S. U-5 Switch Circuit Controller.

Ref. No.	Description	Piece No.
A	Type 1703 Flexible Connection only, 1″ x 18″ lg. flex metallic conduit and two 1″ straight squeeze connectors	1703-0
A1	Same as Ref. A but 1½″ x 18″ lg. flex metallic conduit and one 1½″ straight squeeze connector	1703-0X
A2	Same as Ref. A1 but two 1½″ straight squeeze connectors	1703-2
B	Type 1702 Flexible Connection with cover plate for GRS Model 5 Switch Circuit Controller with 1½″ conduit	1702-12
C	Type 1705 Flexible Connection with cover plate for US&S U-5 Switch Circuit Controller with 1½″ conduit	1705-12
	REPLACEMENT PARTS	
1	1″ x 18″ lg. flex metallic conduit	
1A	1½″ x 18″ lg. flex metallic conduit	
2	1″ Straight Squeeze Connector	
2A	1½″ Straight Squeeze Connector	
3	Cover plate for GRS Co. Model 5 Switch Circuit Controller Ref. B	1702-1A
4	Cover plate for US&S U-5 Switch Circuit Controller Ref. C	1705-1A

Type 147 Signal Padlock

Triangular Key

A.A.R. Standard Hex Key

Padlock

Spanner Key

A heavily constructed padlock for use in protecting signaling equipment. The body and shackle are forged brass. The Triangular and Hex Keys are furnished in cadmium-plated bronze. The Spanner Key is furnished in cadmium-plated sheet steel.

Three types of locks are available:

Padlock for A.A.R. Standard Hex. Key or socket wrench.

Padlock for Spanner Key and Hex. Key.

Padlock for Triangular Key.

Ref. No.	Description	Piece No.
A	Type 147 Padlock for A.A.R. Standard Hex. Key	0147-1
B	Type 147 Padlock for Hex. or Spanner Key	0147-3
C	Type 147 Padlock for Triangular Key	0147-2
D	Key for Type 147 Padlock, A.A.R. Standard Hex	0147-14
E	Spanner Key for Type 147 Padlock	0147-13
F	Triangular Key for Type 147 Padlock	0147-10

Padlocks

FOR EVERY RAILROAD PURPOSE

No. 620 Padlock 1⅜″

Padlocks are furnished all keyed alike or all differently-keyed as desired. Some styles can be master-keyed if required. These locks cannot be jarred open. Specify quantity of keys to be furnished.

Genuine pin tumbler mechanism. Padlock of extruded brass. Shackle of case-hardened steel.

BOOTLEGS

CONTENTS

	Page No.
Bootlegs	7-2 to 7-9
Connectors	7-10 to 7-12
Channel Pins and Punches	7-15
Bonding Drill	7-16 to 7-20
Bonding Drill Bits	7-17
Cable Marker	7-25
Victolac Insulating and Cable Paint	730
Victolac Sealing Compounds	7-31
Cold Application Sealing Compounds	7-32
Signal Cement	7-32

WESTERN-CULLEN-HAYES, Inc.
2700 West 36th Place • Chicago, Illinois 60632 • Telephone: 312/254-9600 • Telex 25-3206

Type 1184 Bootleg

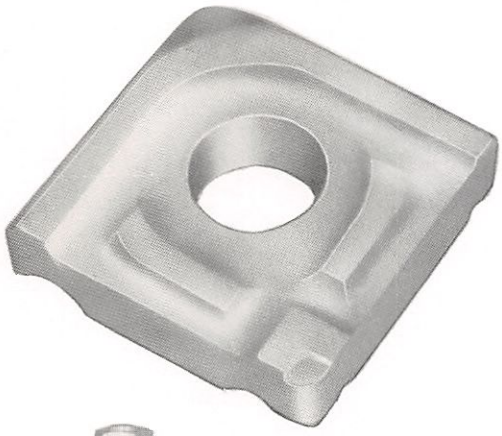

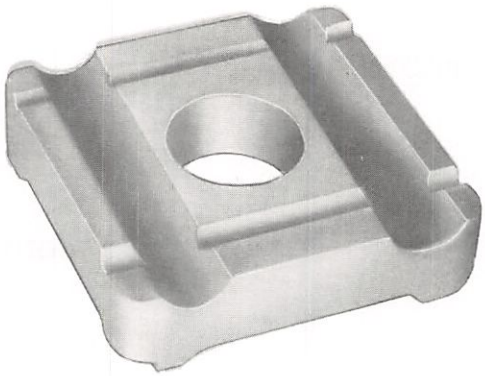

No. 1184-17 Universal Clamp

No. 1184-24AR

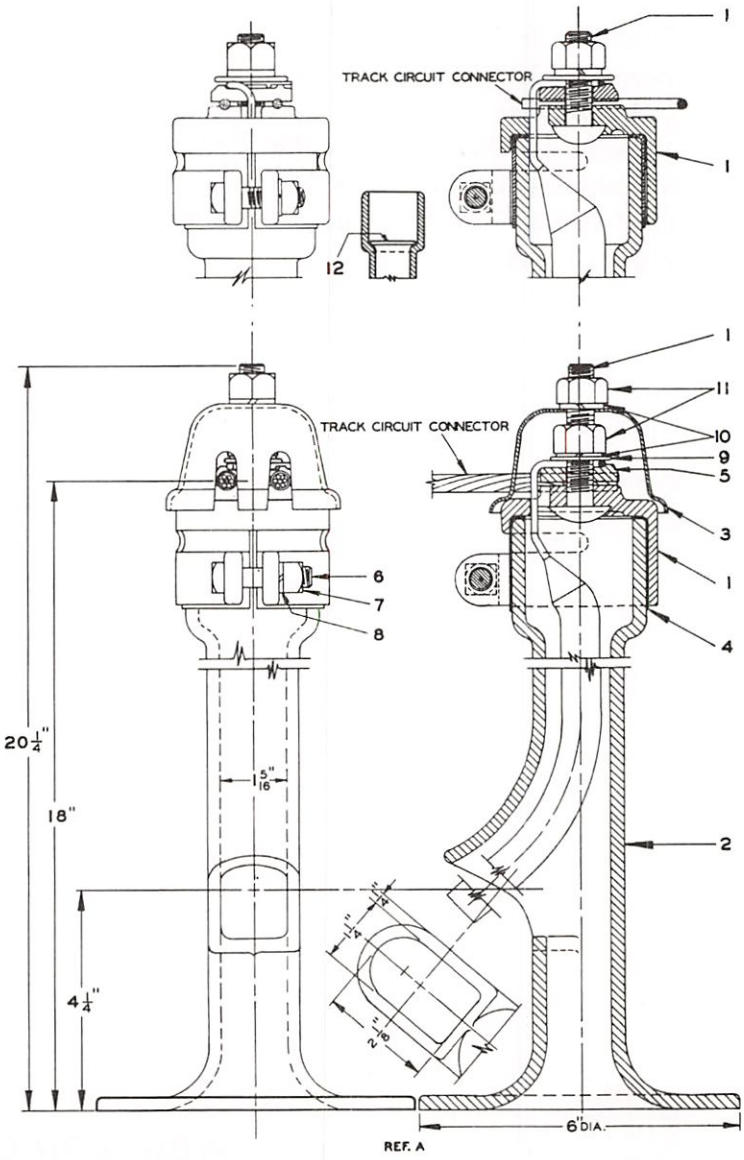

Type 1184 Bootleg

Type 1184 Parkway Cable Bootlegs have been designed for use with either one or two single conductor plug type track circuit connectors or one duplex conductor track circuit connector. The cast bronze clamping member is of universal design with grooves to accommodate any of the stranded conductors listed on A.A.R., Signal Section, Drawings 1631 and 1632. The Bootlegs are furnished with or without the slotted cover, as desired.

The riser is of cast grey iron, 1¼" inside diameter, and has a side entrance for the parkway cable, located 4¼" above the bottom of the base.

The height from the bottom of the base to the rail connectors is 18". Overall height of the bootleg with cover is 20¼" and that of the one without a cover is 19½".

The malleable iron bootleg head and the slotted steel cover are hot galvanized. All other hardware is cadmium plated except the 1/2" lock washers which are bronze, unplated.

The bootleg head is insulated from the riser by a 1/16" thick hard fibre sleeve.

The clamping bolt is permanently attached to the head casting.

Ref. No.	Description	Piece No.
A	Type 1184 Bootleg complete, with cover	1184-24AR
A1	Same as Ref. A, but without cover	1184-24BR
A2	Same as Ref. A without cover but with black fibre washer (Ref. 12) in riser	1184-24CR
A3	Same as Ref. A less riser	1184-24A
A4	Same as Ref. A less riser and cover	1184-24B
A5	Same as Ref. A less riser and cover but with black fibre washer (Ref. 12) to be placed in riser	1184-24CRB
	REPLACEMENT PARTS	
1	Head Casting and Carriage bolt as used with cover	1184-7
1A	Same as Ref. 1 but as used without cover	1184-7B
2	Riser	1178-23
3	Cover	1184-36
4	Insulating cap	1184-6
5	Universal clamp	1184-17
6	3/8" - 16 x 1½" lg. sq. hd. bolt, stl. (cad. pl.)	
7	3/8" - 16 sq. nut, stl. (cad. pl.)	
8	3/8" lock washer, stl. (cad. pl.)	
9	Washer, rounded edge, stl. (cap. pl.)	1186-12
10	1/2" lock washer, bronze	
11	1/2" - 13 hex. nut stl. (cad. pl.)	
12	Black fibre washer	1184-29

Type 1186-32 Bootlegs

The Type 1186-32 Parkway Cable Bootlegs are designed for use with two parkway cable wires and two single conductor or one duplex conductor track circuit connectors. The mechanical clamp is of universal design to accommodate any of the stranded conductors listed on A.A.R., Signal Section, Drawings 1631 and 1632.

Parkway Cable wires are brought up through two holes in the bottom of the solderwell and terminated under rounded-edged, flat, washers on the 1/2″ bolt.

Track circuit connectors enter the solderwell, when required, through holes of appropriate size, drilled flush with the bottom of the grooves in the bootleg head. Thus the cable wires and track circuit connectors are mechanically supported and electrically connected by pressure on the bolt assembly. Soldered electrical connection can be made, when desired, by pouring molten solder into the well.

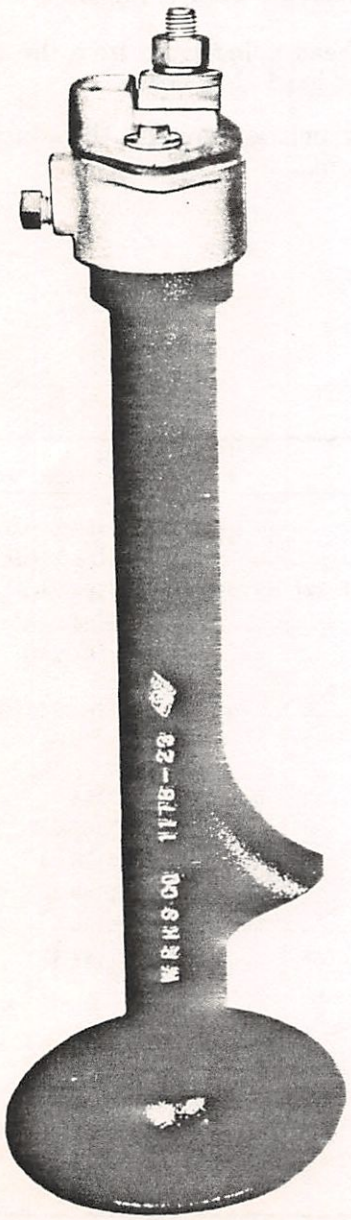

No. 1186-32AIR

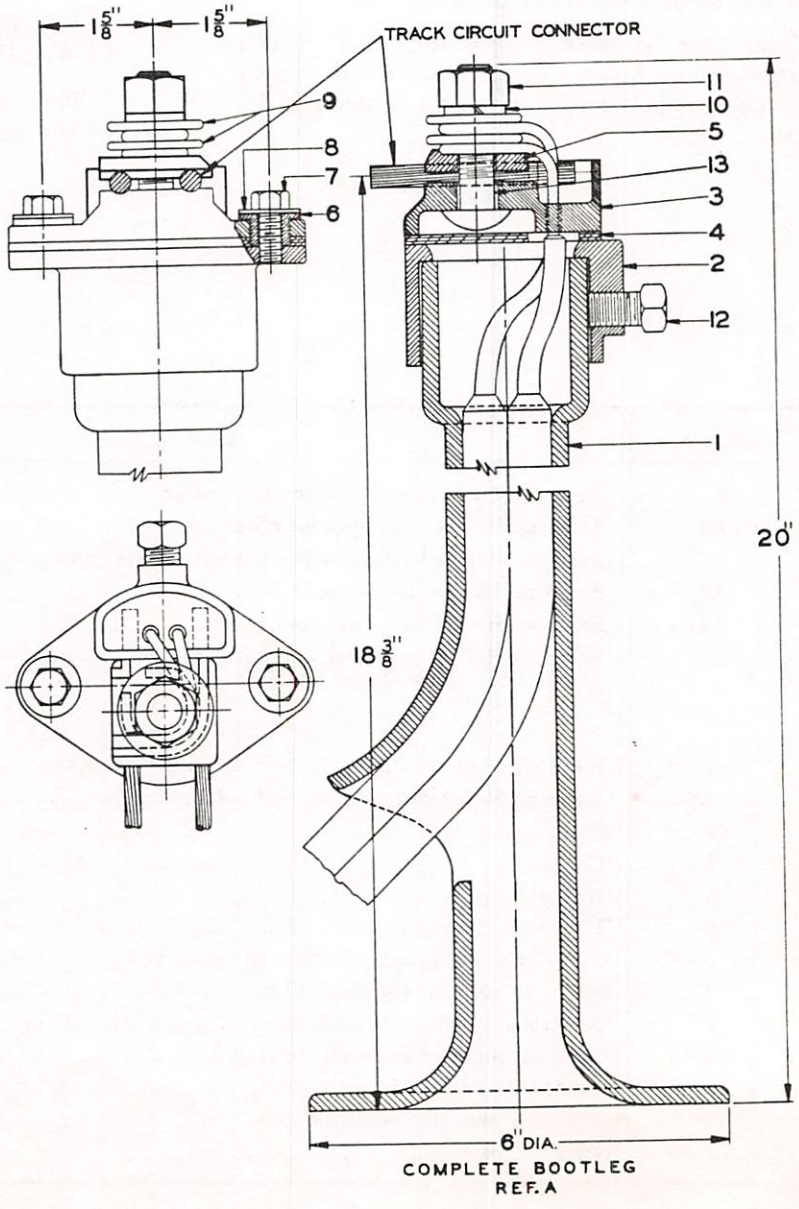

COMPLETE BOOTLEG
REF. A

Type 1186-32 Bootlegs

The holes in the bottom of the solderwell are for use with #6 to #10 solid conductor parkway cable wires. The ordering reference table, below, shows the data for the various sizes of stranded track circuit connector which each design will accommodate.

The riser is of cast grey iron, 1¼" inside diameter, and has a side entrance for the parkway cable, located 4¼" above the base.

The height from bottom to the track circuit connectors is 18⅜" and the overall height of the bootleg is 20".

The cap is of cast grey iron secured to the riser by a 1/2", cup point set screw. The grooved head and solderwell casting is malleable iron insulated from the cap by a hard fibre plate. Cap screws are Everdue bronze insulated from the head casting by Nylon Bushings. The head and cap castings are hot-galvanized. All other hardware is cadmium plated except the 1/2" lockwasher which is bronze, unplated.

The Universal Clamp illustrated on page 7-2 is supplied with this bootleg.

Ref. No.	Description	Solderwell Drilled for Track Circuit Connector Strand	Piece No.
A	Type 1186-32 Bootleg complete	Not drilled	1186-32AR
A1	Type 1186-32 Bootleg complete	3/16" dia.	1186-32BR
A2	Type 1186-32 Bootleg complete	7 - #12 A.W.G.	1186-32CR
A3	Type 1186-32 Bootleg complete	7 - #10 A.W.G.	1186-32DR
A4	Type 1186-32 Bootleg complete	7 - #12 B.W.G.	1186-32ER
A5	Type 1186-32 Bootleg complete less riser	Not drilled	1186-32A
A6	Type 1186-32 Bootleg complete less riser	3/16" dia.	1186-32B
A7	Type 1186-32 Bootleg complete less riser	7 - #12 A.W.G.	1186-32C
A8	Type 1186-32 Bootleg complete less riser	7 - #10 A.W.G.	1186-32D
A9	Type 1186-32 Bootleg complete less riser	7 - #12 B.W.G.	1186-32E
	REPLACEMENT PARTS		
1	Riser		1178-23
2	Cap		1186-8
3	Head, not drilled for track circuit connector		1186-72G
3A	Head, drilled for 3/16" dia. strand		1186-72E
3B	Head, drilled for 7 - #12 A.W.G. strand		1186-72D
3C	Head, drilled for 7 - #10 A.W.G. strand		1186-72C
3D	Head, drilled for 7 - #12 B.W.G. strand		1186-72A
4	Insulating plate		1186-9
5	Universal clamp		1184-17
6	Insulating bushing, nylon		1184-10N
7	5/16" - 18 x 7/8" hex. hd. cap. sc., bronze		
8	Washer 11/32" I.D. x 11/16" O.D. x 1/16" thick, bronze		
9	Washer, rounded edge, stl. (cad. pl.)		1186-12
10	1/2" lock washer, bronze		
11	1/2" - 13 hex. nut, stl. (cad. pl.)		
12	1/2" - 13 x 3/4" sq. hd. cup pt. set screw, stl. (cad. pl.)		
13	Carriage bolt 1/2" - 13 x 2" lg. (cad. pl.)		

Type 1186-33 Bootlegs

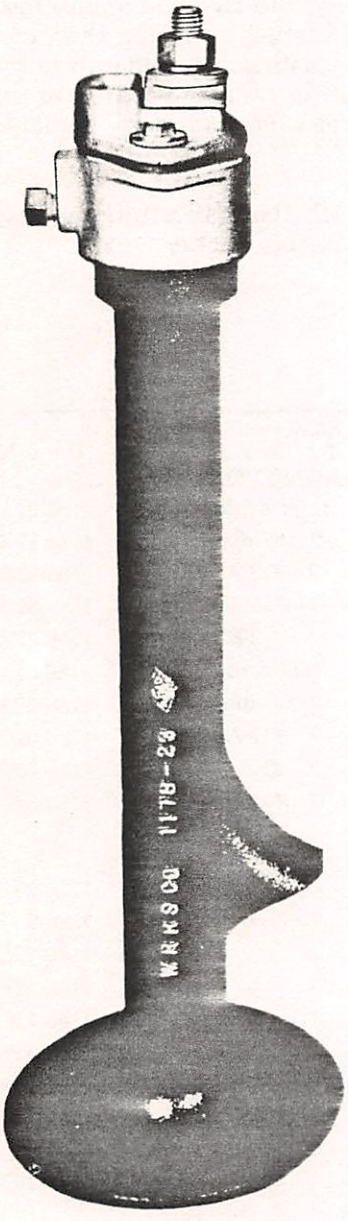

No. 1186-33

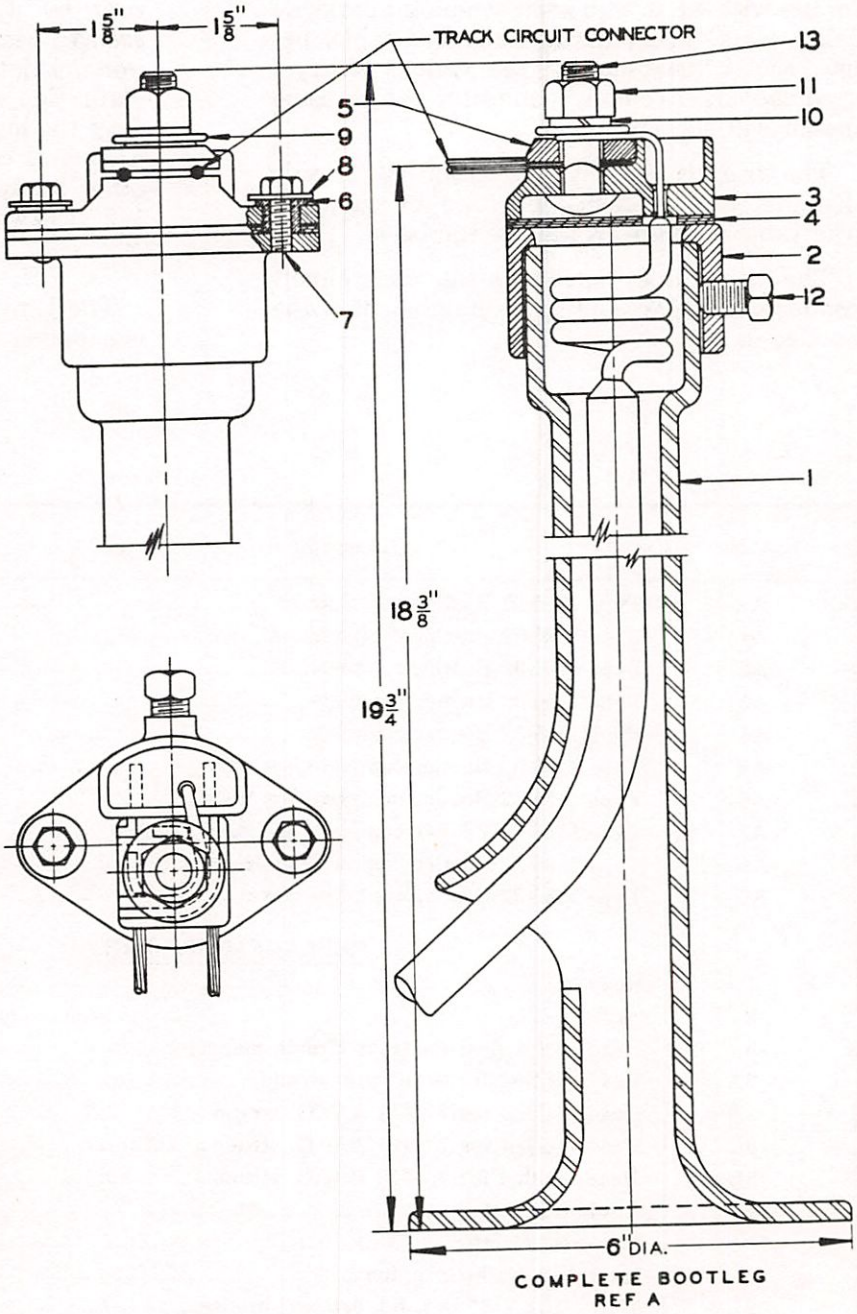

COMPLETE BOOTLEG
REF A

Type 1186-33 Bootlegs

The Type 1186-33 Parkway Cable Bootlegs are identical with the Type 1186-32 Bootlegs, described on the preceeding pages, except that they are designd for use with one Parkway Cable, and therefore, have but one hole drilled in the bottom of the solderwell for one #6 to #10 A.W.G., solid conductor parkway cable wire.

Ref. No.	Description	Solderwell Drilled for Track Circuit connector strand	Piece No.
A	Type 1186-33 Bootleg complete	Not Drilled	1186-33AR
A1	Type 1186-33 Bootleg complete	3/16" dia.	1186-33-BR
A2	Type 1186-33 Bootleg complete	7 - #12 A.W.G.	1186-33CR
A3	Type 1186-33 Bootleg complete	7 - #10 A.W.G.	1186-33DR
A4	Type 1186-33 Bootleg complete	7 - #12 B.W.G.	1186-33ER
A5	Type 1186-33 Bootleg complete less riser	Not Drilled	1186-33A
A6	Type 1186-33 Bootleg complete less riser	3:16" dia.	1186-33B
A7	Type 1186-33 Bootleg complete less riser	7 - #12 A.W.G.	1186-33C
A8	Type 1186-33 Bootleg complete less riser	7 - #10 A.W.G.	1186-33D
A9	Type 1186-33 Bootleg complete less riser	7 - #12 B.W.G.	1186-33E
	REPLACEMENT PARTS		
1	Riser		1178-23
2	Cap		1186-8
3	Head, not drilled for track circuit connector		1186-71G
3A	Head, drilled for 3/16" dia. strand		1186-71E
3B	Head, drilled for 7 #12 A.W.G. strand		1186-71D
3C	Head, drilled for 7 #10 A.W.G. strand		1186-71C
3D	Head, drilled for 7 #12 B.W.G. strand		1186-71A
4	Insulating plate		1186-9
5	Universal clamp		1184-17
6	Insulating bushing, nylon		1186-10N
7	5/16" - 18 x 7/8" hex. hd. cap. scr., bronze		
8	Washer 11/32" I.D. x 11/16" O.D. x 1/16" thick, bronze		
9	Washer, rounded edge, stl. (cad. pl.)		1186-12
10	1/2" lock washer, bronze		
11	1/2" - 13 hex. nut, stl. (cad. pl.)		
12	1/2" - 13 x 3/4" sq. hd. cup pt. set screw, stl. (cad. pl.)		
13	Car. bolt 1/2" x 1¾" lg. (cad. pl.)		

Type 1155 Bootleg

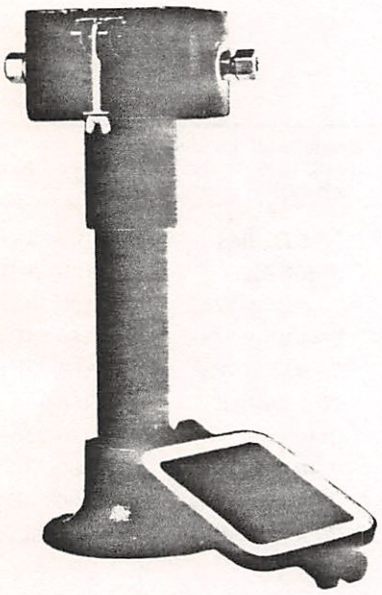

No. 1155-161B

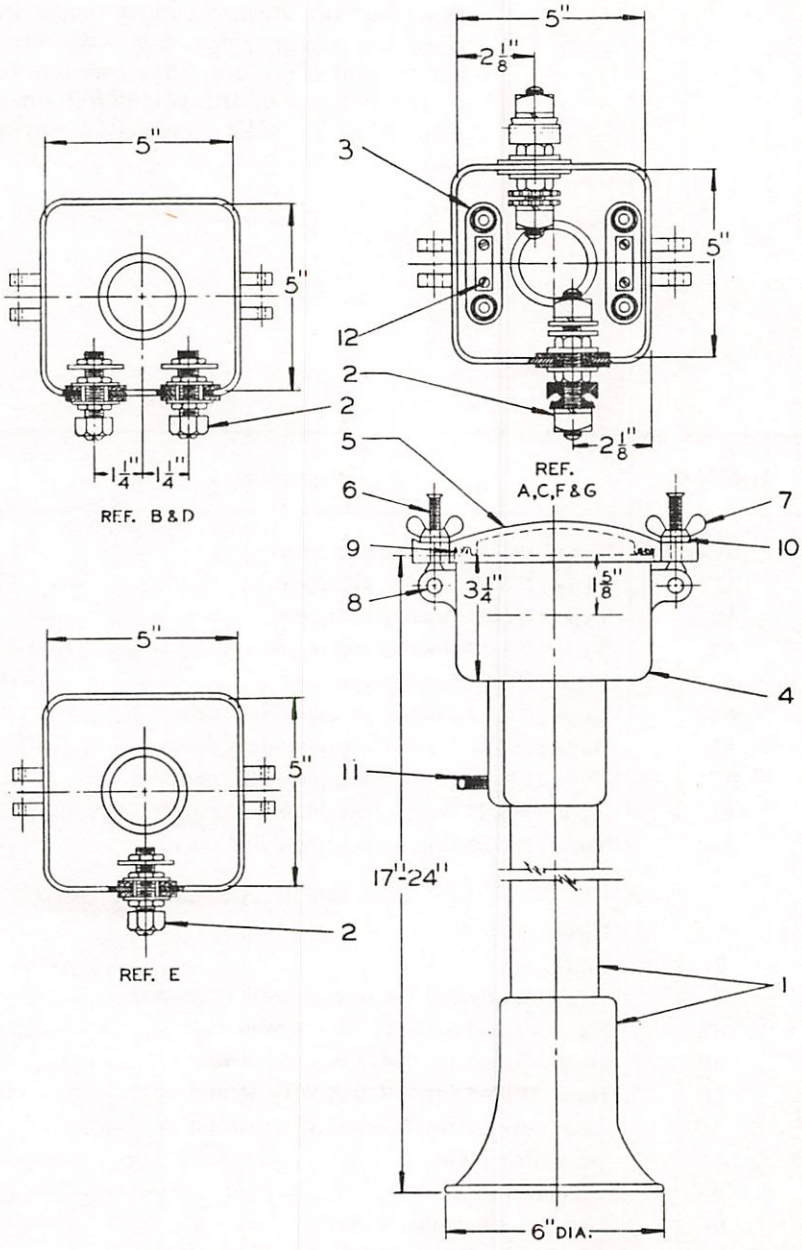

Type 1155 Bootleg

Type 1155 Bootleg has an extra large head. As many as four A.A.R. porcelain terminals may be installed in the head. Any connector shown on pages 7-10 and 7-11 may be furnished with this bootleg. Type 1155-31 Mechanical Connector for 7 - #10 A.W.G., 7 - #12 A.W.G., or 7 - #14½ B.W.G. strands is especially popular in Type 1155 Bootleg assemblies.

Standard height, 17″ overall; riser 2″ I.D.; head 5″ sq. by 3¼″ deep.

A riser is also available, when specified, to provide 24″ overall height.

Ref. No.	Description	Piece No.
A	Type 1155 Bootleg with two type 1170-41 connectors and two A.A.R. terminal blocks	1155-161B
B	Type 1155 Bootleg with two type 1170-39A connectors on one side	1155-276
B1	Same as Ref. B less connectors	1155-276A
C	Type 1155 Bootleg with two type 1170-39A connectors, one on each side	1155-277
D	Type 1155 Bootleg with two type 1170-32 connectors on one side	1155-278
E	Type 1155 Bootleg with one type 1170-41 connector	1155-161C
F	Type 1155 Bootleg with one type 1155-241 connector	1155-185
F1	Same as Ref. F less pipe and base	1155-185A
G	Type 1155 Bootleg with two type 1155-241 connectors, one on each side	1155-186
G1	Same as Ref. G less pipe and base	1155-186A
	REPLACEMENT PARTS	
1	Pipe and base sub-assembly for 17″ overall height	1155-58
1A	Pipe and base sub-assembly for 24″ overall height	1155-58F
2	Connector for Ref. A	1170-41
2A	Connector for Ref. B&C	1170-39A
2B	Connector for Ref. D	1170-32
2C	Connector for Ref. E	1170-41
2D	Connector for Ref. F&G	1155-241
3	AAR terminal block	1056-10
4	Top casting for Ref. A	1155-23BF
4A	Top casting for Ref. B&D	1155-23Z
4B	Top casting for Ref. C	1155-23ZA
4C	Top casting for Ref. E	1155-123D1
4D	Top casting for Ref. F	1155-23BG
4E	Top casting for Ref. G	1155-23BH
5	Cover	1155-122
6	Eyebolt	1247-4
7	Wing nut	1247-5
8	3/16″ dia. x 1½″ lg. rd. hd. rivet (brass)	
9	7/16″ dia. x 18″ lg. Torchwick Packing	
10	.337″ I.D. x 7/8″ O.D. plain washer (brass)	
11	3/8″ - 16 x 5/8″ lg. cup point set screw, stl	
12	No. 10 - 32 x 3/4″ lg. rd. hd. machine screw (brass)	

(For connector parts see page 7-11)

Type 1155 Connector

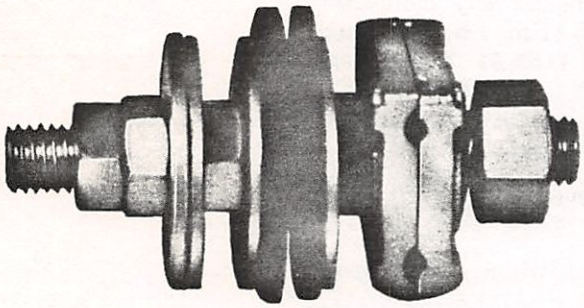

Ref. A

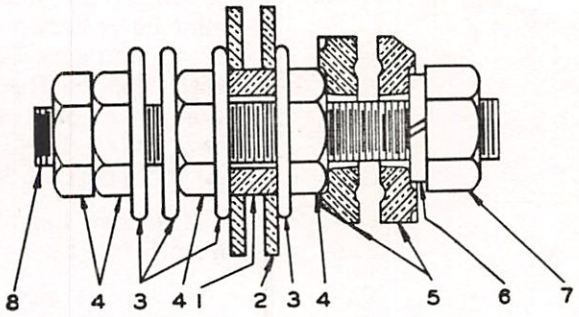

This connector consists of a 1/2″ threaded steel rod 4″ long, with steel washers, steel hex. nuts for clamping to the wall of the bootleg, hex. nuts for terminating the wires, complete with bronze universal wire clamps, and necessary bakelized canvas insulation. All steel parts are hot galvanized.

Type 1155-241 (Ref. A) has a 3/8″ long insulating bushing for 3/16″-1/4″ thick wall and Type 1155-241A (Ref. A1) has a 5/8″ long insulating bushing for 5/16″-3/8″ thick wall. Both types are used for #6 A.W.G. wire and 7 #10 A.W.G., 7 #12 A.W.G., or 7 #14½ A.W.G. strands.

Ref. No.	Description	Piece No.
A	Type 1155 Connector with 1″ O.D. x 9/16″ I.D. x 3/8″ lg. insulating bushing	1155-241
A1	Same as Ref. A but with 5/8″ lg. insulating bushing	1155-241A
	REPLACEMENT PARTS	
1	Insulating bushing 1″ O.D. x 9/16″ I.D. x 3/8″ lg.	1155-34
1A	Insulating bushing 1″ O.D. x 9/16″ I.D. x 5/8″ lg.	1155-34A
2	Insulating washer	1155-35
3	1/2″ standard steel washer (cad. pl.)	1155-36
4	1/2″-13 hex. jam nut	1184-17
5	Universal clamp	
6	1/2″ standard lock washer	
7	1/2″-13 standard hex. nut	
8	Threaded rod 1/2″-13	1155-40

Type 1170 Connectors

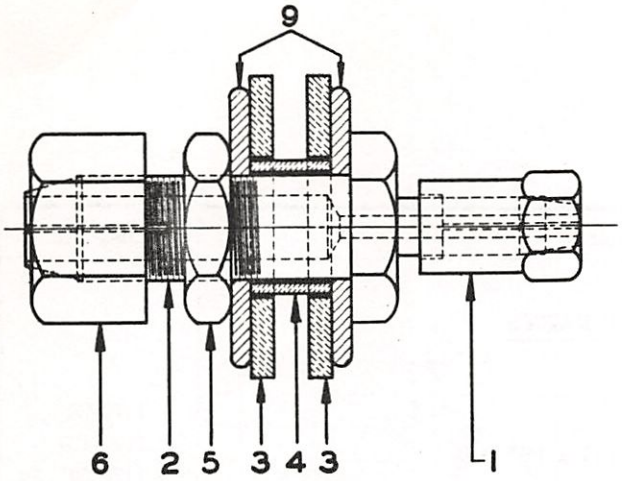

Ref. A

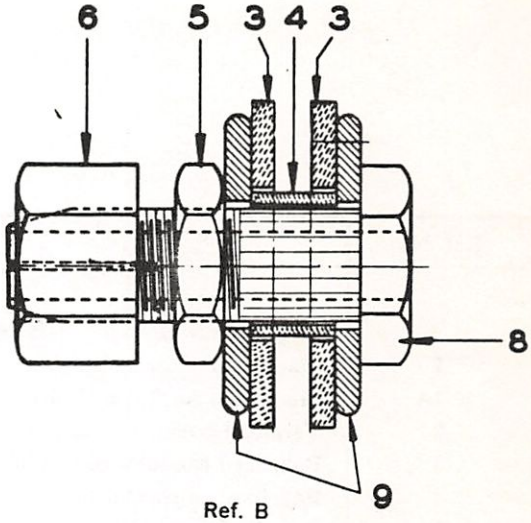

Ref. B

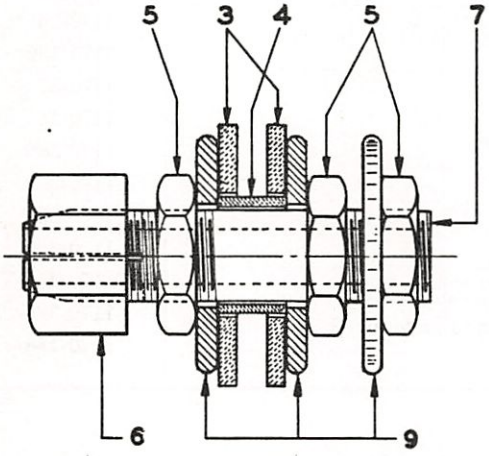

Ref. C

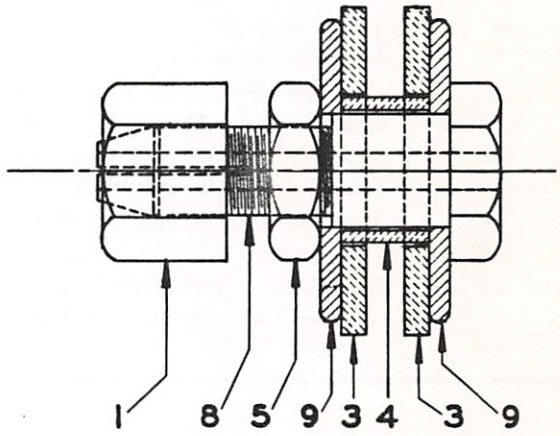

Ref. D

These connectors are made of hollow brass studs with brass clamps and lock nuts, electro galvanized steel washers, and highest grade bakelized canvas insulation. Ref. A connector is for terminating #9 A.W.G. solid copper wire and strand composed of 7#10 A.W.G. wires.

Ref. No.	Description	Piece No.
A	Type 1170 Connector complete (used with Type 1155-278 bootleg)	1170-32
B	Type 1170 Connector complete for 7 #10 A.W.G. strand	1170-39
B1	Same as Ref. B but for 7 #12 A.W.G. strand	1170-39A
B2	Same as Ref. B but for 7 #14½ A.W.G. strand	1170-39B
B3	Same as Ref. B but for 3/8" strand	1170-39C
B4	Same as Ref. B but for 7 #12 B.W.G. strand	1170-39D
B5	Same as Ref. B but for .251" dia. strand	1170-39F
C	Type 1170 Connector complete (used with Type 1155-161B and 1155-161C)	1170-41
D	Type 1170 Connector complete for 3/16" stranded bond	1170-139
D1	Same as Ref. D but less Ref. 3, 4 and 9	1170-139X

Parts list on following page

Type 1170 Connectors

Ref. No.	Description	Piece No.
	REPLACEMENT PARTS	
1	Clamp nut	1170-29
1A	Clamp nut for Type 1170-139 connector	1170-137
2	Terminal bolt	1170-30
3	Bakelized canvas washer 1/8" thick x 3/4" I.D. x 1⅝" O.D.	1170-34
4	Bakelized canvas bushing	1170-35
5	Brass lock nut, 1/4" thick	1170-36
5A	Brass lock nut for Type 1170-139 connector	1170-136
6	Brass clamp nut	1170-37
7	Hollow brass stud	1170-44
8	Brass bolt for 7-#10 A.W.G. strand	1170-38
8A	Brass bolt for 7-#12 A.W.G. strand	1170-38A
8B	Brass bolt for 7-#14½ A.W.G. strand	1170-38B
8C	Brass bolt for 3/8" strand	1170-38C
8D	Brass bolt for 7-#12 B.W.G. strand	1170-38D
8E	Brass bolt for .251" dia. strand	1170-38E
8F	Brass bolt for 3/16" strand	1170-138
9	Washer, 7/64" thick x 9/16" I.D. x 1⅜" O.D. stl. electro galvanized or cad. plated	

Channel Pins

TINNED

Single-Grooved Pin (A.A.R. 10861)

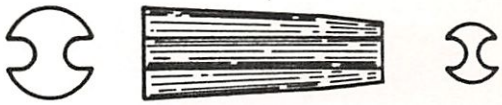

Double-Grooved Pin (A.A.R. 10862)

Ref. No.	Description	Piece No.
A	Single-Grooved Channel Pin, Tinned	339
B	Double-Grooved Channel Pin, Tinned	342

Channel Pin Punches and Sets

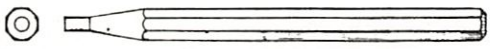

Ref. C

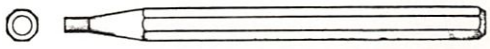

Ref. D

Ref. E

Ref. F

For Single-Grooved 9/32" Pins

For Double-Grooved 3/8" Pins

Ref. No.	Description	Piece No.
C	Standard Channel Pin Punch for 9/32" single grooved pins	1852
D	Standard Channel Pin Drift Punch for 9/32" single grooved pins	1853
E	Standard Channel Pin Punch for 3/8" double grooved pins	1855
F	Standard Channel Pin Drift Punch for 3/8" double grooved pins	1856

Bonding Drill

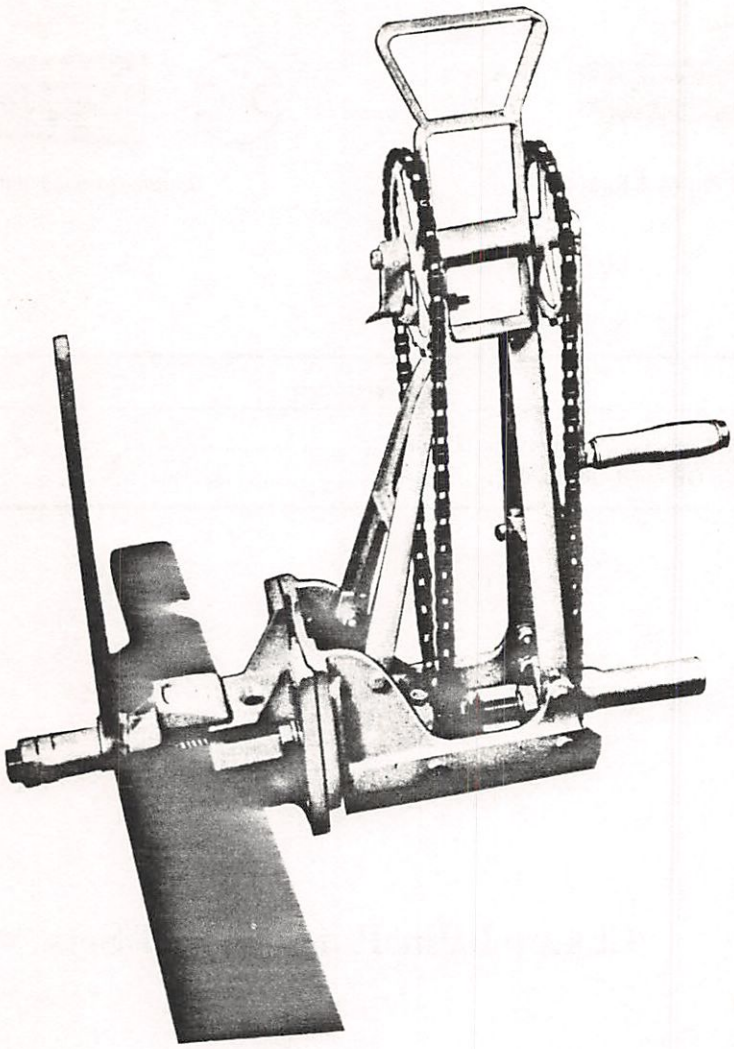

BONDING DRILL

The Western BW Bonding Drill is engineered to give Signalmen a safe economical means of accurately drilling holes in either the head or web of rail.

The Western BW Bonding Drill is a light weight, one-man tool, that can be easily carried and clamped to a rail head enabling the efficient drilling of bonding holes in all types and weight of rail from 80 to 150 pounds.

Simple attachment and precision adjustment features insure ease of operation and absolute accuracy. These features have won wide approval and acceptance as standard equipment by the Nation's leading railroads.

FEATURES

Frame constructed of light weight, high strength, malleable iron. Efficient lubrication of all bearings is attained through ball-valve oil fittings.

Depth gauge adjusting nuts which are easily set to accurately determine the depth of hole to be drilled.

Positive drilling feed is provided through a special gear reduction system.

Drill rigidly mounted to the head of a rail with one single movement of the clamp lever.

Adjustable so the drill may be positioned to drill at any height in either web or head of rail.

Bonding Drill

The Western BW Bonding Drill is available with various types of chuck and spindle assemblies for use with 9/32″ or 3/8″ diameter drill bits, as specified in listing below.

Ref. No.	Description	Piece No.
A	Type HD-185 Bonding Drill with 9/32″ Hyduty chuck and spindle	HD185-A
B	Type HD-185 Bonding Drill with 3/8″ Hyduty chuck and spindle	HD185-B
C	Type HD-185 Bonding Drill with 9/32″ set screw spindle	HD185-C
D	Type HD-185 Bonding Drill with 3/8″ set screw spindle	HD185-D
E	Type HD-185 Bonding Drill with 3/8″ collet chuck and spindle	HD185-E

See pages 7-18 to 7-20 for Replacement Parts.

Bonding Drill Bits

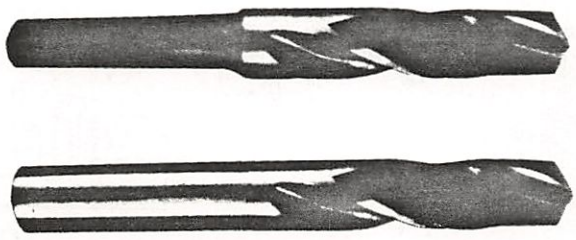

Made of the toughest high speed steel for long performance, accurate hole size and user satisfaction. All sizes are 3″ long.

Ref. No.	Description	Piece No.
A	High Speed bonding drill bit, 9/32″ dia., flatted shank	1452
B	High Speed bonding drill bit, 3/8″ dia., with 9/32″ flatted shank	1454
B1	Same as Ref. B but with 3/8″ flatted shank	1455
B2	Same as Ref. B but with 3/8″ round shank	1455R

Bonding Drill

REPLACEMENT PARTS

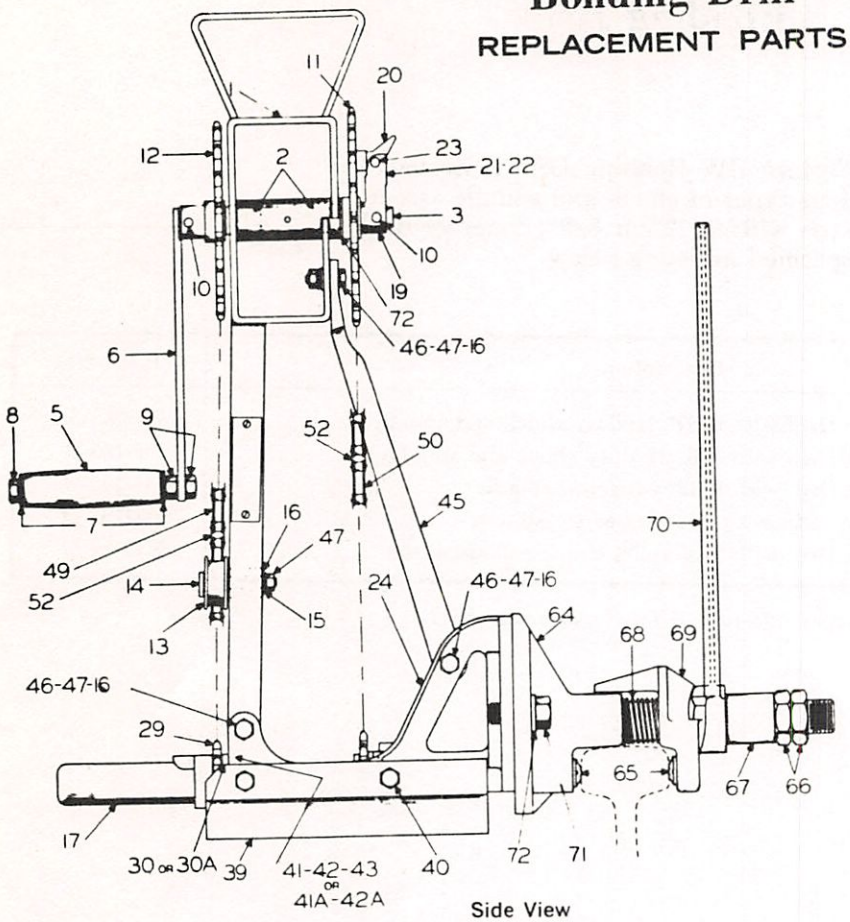

Side View

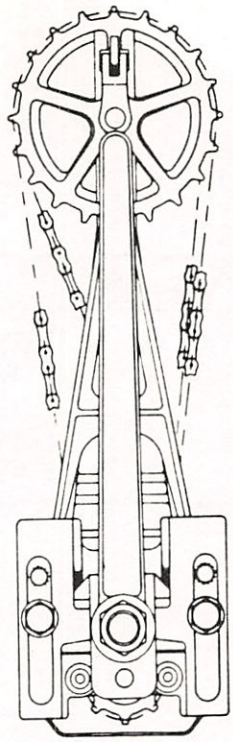

End View

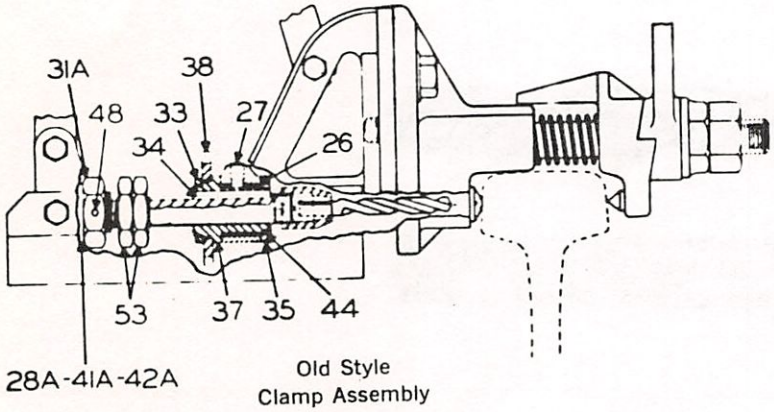

Old Style
Clamp Assembly

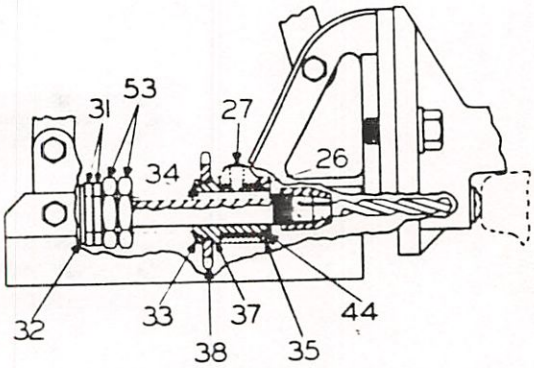

Drive & Feed
Mechanism

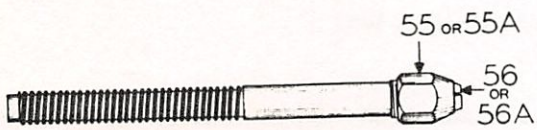

Chuck and Spindle
Assembly

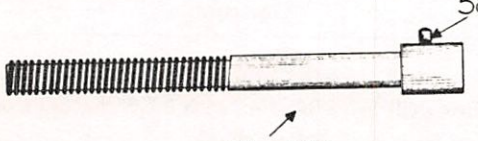

Set Screw Spindle Assembly

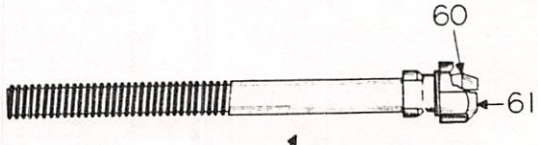

Spindle and Collet
Chuck Assembly

Bonding Drill

REPLACEMENT PARTS

Ref. No.	Qty. Reg.	Description	Piece No.
1	1	Upper frame and bushing assembly (18-20) Gear Ratio	HD-161
2	2	*Upper frame bushing	HD-68
3	1	Crankshaft	HD-3
4	1	Crank Assembly complete	HD-177
5	1	*Crank handle	HD-19
6	1	*Crank	HD-13
7	2	*Flat washer 3/8" nom. dia.	106263
8	1	*Crankshaft capscrew 7/16" - 14 x 5½" hex	250481
9	2	*Hex. nut 7/16" - 14	102636
10	2	Crankshaft pins	251754
11	1	Crank feed sprocket—20 teeth	HD-105
12	1	Crank feed sprocket—18 teeth	HD-106
13	1	Idler sleeve	HD-93
14	1	Idler to frame brace stud	HD-94
15	1	Lock washer 5/16" dia.	103320
16	6	Flat washer 5/16" nom. dia.	103340
17	1	Feed screw shield	MS-608-A
18	1	Pawl arm assembly complete	HD-176
19	1	*Pawl arm	HD-16
20	1	*Pawl	HD-17
21	1	*Pawl plunger	HD-32
22	1	*Pawl spring	HD-34
23	1	Pawl rivet 3/16" dia. x 7/8" button hd.	104070
24	1	Lower frame and bushing assembly	HD-158
26	1	*Drive sleeve bushing	HD-48
27	2	*Frame Oilers	250389
28	1	Feed sprocket assembly complete	HD-210
28A	1	Feed sprocket assembly complete	HD-232
29	1	*Feed sprocket—7 teeth	HD-7
30	1	*Feed nut	HD-24
30A	1	*Feed nut	HD-229
31	2	Feed nut adjusting nut	HD-27
31A	1	Feed nut adjusting nut	HD-231
32	1	Feed nut adjusting nut washer	HD-28
33	1	Drive sleeve locknut	HD-29
34	1	Drive sleeve key	HD-76
35	1	Drive sleeve collar	HD-30
36	1	Drive sleeve assembly complete	HD-206
37	1	*Drive sleeve	HD-4
38	1	*Drive sleeve sprocket—8 teeth	HD-9
39	1	Lower frame shield	HD-66
40	4	Shield capscrew 3/8" - 16 x 1/2"	106974
41	1	Bearing	M-2984
41A	1	Bearing	M-3408
42	1	Washer	M-2985
42A	1	Washer	M-3411
43	1	Washer	M-2986
44	1	Drive collar pin 1/8" dia. x 1⅜" lg.	HD-203
45	1	Frame brace	HD-154
46	5	Capscrew 5/16" - 18 x 1¼" lg. hex. hd.	100122

*Parts Indented are included in the Part under which they are Indented.

Replacement Parts List continued on following page.

Bonding Drill

REPLACEMENT PARTS

(continued)

Ref. No.	Qty. Reg.	Description	Piece No.
47	6	Hex. nut 5/16" - 18	102634
48	1	No. 10 - 24 x 1/4" lg. hex socket cup point set screw	
49	1	Feed chain — 47 links	HD-207
50	1	Feed chain — 48 links	HD-187
52	2	Chain connecting link	251045
53	2	Feed depth gauging nut	HD-103
		CHUCK AND SPINDLE ASSEMBLY	
		(For 9/32" Flatted Shank Bit)	
54	1	Chuck and Spindle Assembly	HD-97
55	1	*Chuck only	HD-72
56	1	*Jaw only	HD-71
		(For 3/8" Flatted Shank Bit)	
54A	1	Chuck and Spindle assembly	HD-98
55A	1	*Chuck only	HD-78
56A	1	*Jaw only	HD-79
		SETSCREW SPINDLE ASSEMBLY	
		(For 9/32" Flatted Shank Bit)	
57	1	Setscrew Spindle Assembly	HD-178
58	1	Spindle Setscrew 5/16" - 18 x 1/2" squarehead	102881
		(For 3/8" Flatted Shank Bit)	
57A	1	Setscrew Spindle Assembly	HD-179
58	1	Spindle Setscrew 5/16" - 18 x 1/2" squarehead	102881
		SPINDLE AND COLLET CHUCK ASSEMBLY	
		(For 3/8" Round Shank Bit)	
59	1	Spindle and Collet Chuck Assembly	M-3192
60	1	Collet only	M-3189
61	1	Spindle nut only	M-3190
		CURRENT TYPE C RAIL CLAMP ASSEMBLY	
63	1	Rail Clamp assembly	M-3185
64	1	*Stationary jaw assembly complete	M-3186
65	3	*Stationary and movable jaw points	M-2989
66	2	*Stationary jaw check nut—1" - 14 hex	115781
67	1	*Stationary jaw spacer	HD-223
68	1	*Moveable jaw release spring	HD-123
69	1	*Moveable jaw assembly complete	M-3187
70	1	*Moveable jaw hand clamping lever	HD-122
71	2	Stationary jaw capscrew—5/8" - 11 x 1½"	100184
72	3	Special washer	P-175
73	2	Stationary jaw wrench (not shown)	HD-225
		HD183 OLD STYLE TYPE C RAIL CLAMP ASSEMBLY	
		(No longer in Production; order Ref. 63)	

*Parts Indented are included in the Part under which they are Indented.

HD 350 ---BONDING DRILL

Bonding Drill

REPLACEMENT PARTS

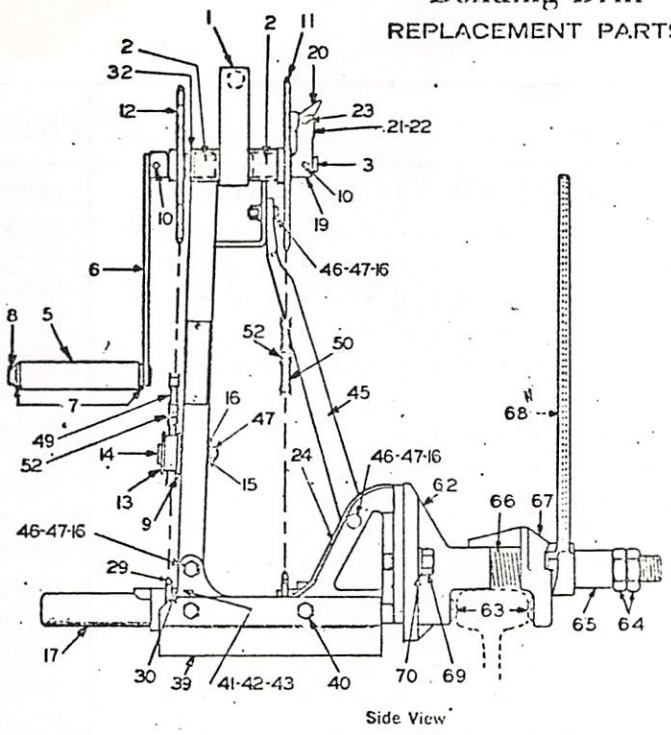

Side View

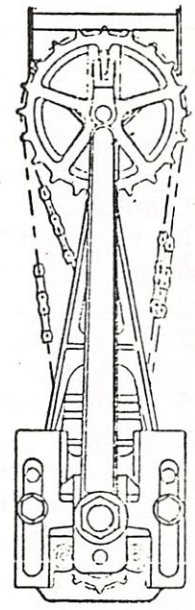

End View

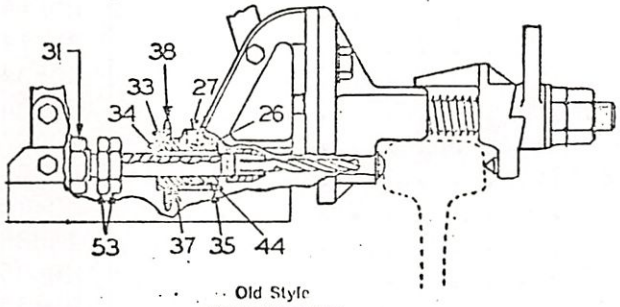

Old Style
Clamp Assembly

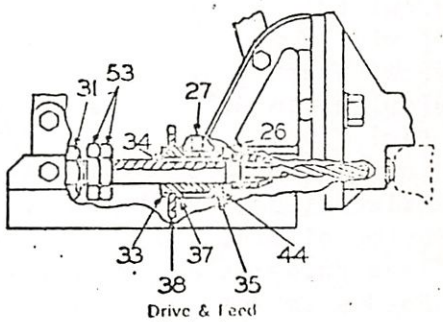

Drive & Feed
Mechanism

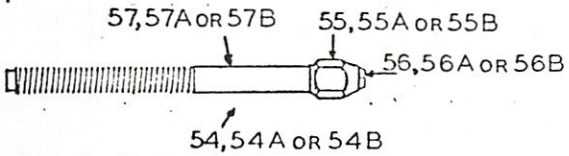

Chuck and Spindle
Assembly

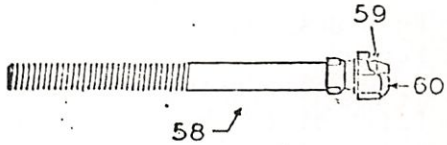

Spindle and Collet
Chuck Assembly

WESTERN-CULLEN-HAYES, Inc.
2700 West 36th Place • Chicago, Illinois 60632 • Telephone: 312/254-9600 • Telex 25-3206

Ref.No.	Qty. Reqd	Description	Piece No.
1	1	Upper frame and bushing assembly (36-40) Gear Ratio . .	HD-364
2	2	*Upper frame bushing	HD-68
3	1	Crankshaft.	HD-3
4	1	Crank Assembly complete	HD-273
5	1	*Crank handle.	HD-19
6	1	*Crank	HD-290
7	2	*Flat washer 7/16" nom. dia.	106263
8	1	Push nut.	HD-272
9	1	½ Plain washer Type B (N)	
10	2	Crankshaft pins	251754
11	1	Crank feed sprocket - 40 teeth.	HD-354
12	1	Crank feed sprocket - 36 teeth.	HD-353
13	1	Idler sleeve.	HD-357
14	1	Idler to frame brace stud	HD-94
15	1	Lock washer 5/16" dia..	103320
16	6	Flat washer 5/16" nom. dia.	103340
17	1	Feed screw shield	MS-608-A
18	1	Pawl arm assembly complete.	HD-176
19	1	*Pawl arm.	HD-16
20	1	*Pawl.	HD-17
21	1	*Pawl plunger.	HD-32
22	1	*Pawl spring	HD-34
23	1	Pawl rivet 3/16" dia. x 7/8" button hd.	104070
24	1	Lower frame and bushing assembly.	HD-365
26	1	*Drive sleeve bushing.	HD-254
27	2	*Frame oilers.	250389
28	1	Feed sprocket assembly complete	HD-355
29	1	*Feed sprocket - 14 teeth.	HD-351
30	1	*Feed nut.	HD-312
31	1	Feed nut adjusting nut.	HD-303
32	1	Washer.	HD-363
33	1	Drive sleeve locknut.	HD-29
34	1	Drive sleeve key.	HD-76
35	1	Drive sleeve collar	HD-30
36	1	Drive sleeve assembly complete.	HD-356
37	1	*Drive sleeve.	HD-310
38	1	*Drive sleeve sprocket - 16 teeth.	HD-352
39	1	Lower frame shield.	HD-66
40	4	Shield capscrew 3/8" - 16 x 1/2".	106974
41	1	Bearing	M-3408
42	1	Washer.	3-B-131
43	1	Internal ring	M-3532
44	1	Drive collar pin 1/8" dia. x 1-3/8" lg.	HD-293
45	1	Frame brace	HD-154

*Parts Indented are included in the Part under which they are indented.

Replacement Parts List continued on following page

WESTERN-CULLEN-HAYES, Inc.
2700 West 36th Place • Chicago, Illinois 60632 • Telephone: 312/254-9600 • Telex 25-3206

Ref. No.	Qty. Req'd	Description	Piece No.
46	5	Capscrew 5/16" - 18 x 1¼" lg. hex. hd.	100122
47	6	Hex nut 5/16" - 18	102634
49	1	Feed chain - 94 links.	HD-359
50	1	Feed chain - 96 links.	HD-360
52	2	Chain connecting link.	HD-361
53	2	Feed depth gauging nut	HD-103
		CHUCK AND SPINDLE ASSEMBLY (*Model 350A*) (For 9/32" Flatted Shank Bit)	
54	1	Chuck and spindle assy.	HD-313
55	1	*Chuck only	HD-264
56	1	*Jaw only	HD-265
57	1	*Spindle.	HD-322
		CHUCK AND SPINDLE ASSEMBLY (*Model 350B*) (For 3/8" Flatted Shank Bit)	
54A	1	Chuck and spindle assy.	HD-314
55A	1	*Chuck only	HD-264
56A	1	*Jaw only	HD-265
57A	1	*Spindle.	HD-323
		CHUCK AND SPINDLE ASSEMBLY (*Model 350E*)	
54B	1	Chuck and spindle assy	HD-317
55B	1	*Chuck only	M-3190
56B	1	*Jaw only	M-3189
57B	1	*Spindle S/A.	HD-318
		SPINDLE AND COLLET CHUCK ASSY. (*Model 350D*) (For 3/8" Round Shank Bit)	
58	1	Spindle and collet chuck assy.	HD-316
59	1	*Collet only.	M-3189
60	1	*Spindle nut only	M-3190
61	1	Rail clamp assy.	M-3185
62	1	*Stationary jaw assy complete	M-3186
63	3	*Stationary and moveable jaw points.	M-2989
64	2	*Stationary jaw check nut - 1"-14hex.	122463
65	1	*Stationary jaw spacer.	HD-223
66	1	*Moveable jaw release spring.	HD-123
67	1	*Moveable jaw assy complete	M-3187
68	1	*Moveable jaw hand clamping lever	HD-338
69	2	Stationary jaw cpascrew 5/8-11x1½.	100184
70	2	Special Washer	P-175

*Parts Indented are included in the Part under which they are indented.

Replacement Parts List continued on following page

Ref. No.	Qty. Reqd.	Description	Piece No.
71	2	Stationary jaw wrench (Not Shown)	HD-225
72	1	Field replacement kit	HD-362
	1	*Feed sprocket (36T)	HD-353
	1	*Drive sprocket (40T)	HD-354
	1	*Feed nut sprocket (14T)	HD-351
	1	*Drive sleeve sprocket (16T)	HD-352
	1	*Feed chain 47" lg	HD-359
	1	*Drive chain 48" lg.	HD-360
	2	*Chain connecting links.	HD-361
	1	*Idler sleeve.	HD-357
	1	*Washer.	HD-363
	1	*Washer ½" plain Type B (N).	
	1	*Print assy. HD-350.	M-3625-W

*Parts Indented are included in the Part under which they are indented.

Replacement Parts List continued on following page

Cable Marker

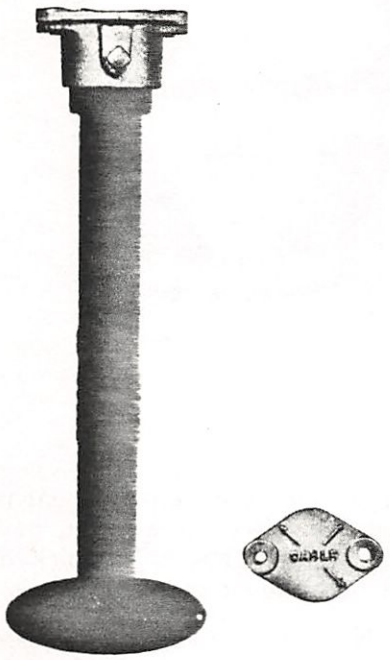

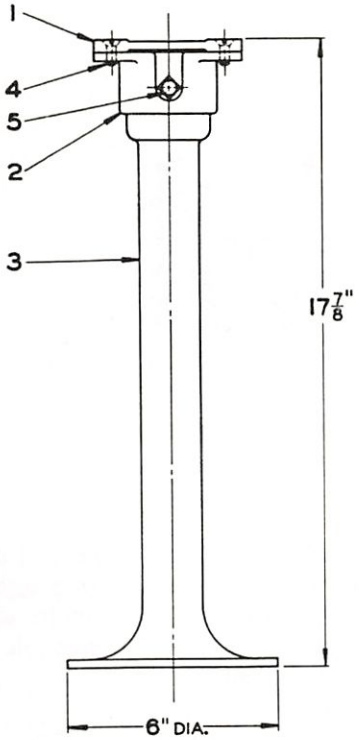

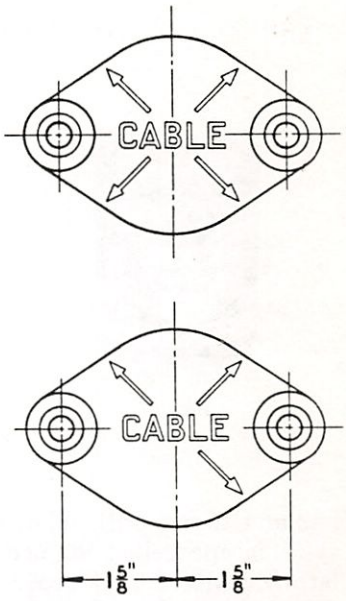

Type ES 1692 Cable Marker is for marking the route of the underground cable. By removing an arrow with a chisel the reversible top can be used for 90° turn or straight through designation.

Ref. No.	Description	Piece No.
A	Type ES 1692 Cable Marker complete	ES 1692
	REPLACEMENT PARTS	
1	Reversible Cable Marker Plate	ES 1692-1
2	Cap	1186-8
3	Riser	1178-23
4	5/16" - 18 x 3/4" lg. fl. hd. mach. sc	
5	1/2" - 13 x 3/4" lg. sq. hd. cup pt. steel set sc	

Victolac Universal Black

INSULATING PAINT

CABLE PAINT

Ref. A

Ref. B

Ref. F

Victolac Universal Black, of the volatile thinner type, is unexcelled for use in painting and insulating soldered and taped joints, junction boxes, switchboards, cables, battery racks, storage batteries, transformers, switch rod or rail insulations, and in fact, for all purposes where an insulating and protective paint or varnish is required.

Victolac No. 11 is the ideal material in its field, because while it dries quickly with a permanent hard, glossy surface, it will never chip, crack, nor deteriorate the insulation or other material with which it comes in contact. At the same time, it offers positive permanent protection against the effects of weather, moisture, acids, alkalies, gases, etc. It is quick drying, suitable for both indoor and outside use.

Victolac No. 12Q is a slightly slower drying compound meeting the requirements of A.A.R., Signal Section Specification, No. 181. It is recommended for painting braid-covered cables, wood battery racks, etc.

Furnished in one pint, one gallon and five-gallon containers, also 55-gallon, one-time shipping drums.

Ref. No.	Description	Piece No.
A	Victolac No. 11 Universal Black Insulating Paint in one-pint can	11P
B	Victolac No. 11 Universal Black Insulating Paint in one-gallon can	11G
C	Victolac No. 11 Universal Black Insulating Paint in five-gallon can	11G5
D	Victolac No. 11 Universal Black Insulating Paint in 55-gallon one-time shipping drum	11G55
E	Victolac No. 12Q Universal Black Cable Paint in one-gallon can	12G
F	Victolac No. 12Q Universal Black Cable Paint in five-gallon can	12G5
G	Victolac No. 12Q Universal Black Cable Paint in 55-gallon one-time shipping drum	12G55

Victolac Parkway Cable Sealing Compound

FUSIBLE ASPHALTIC BASE TYPE

Ref. A

Ref. B

Ref. C

Victolac No. 25 is a high grade insulating material which is unequalled for application to parkway cable bootlegs, junction boxes, and trunking where sealing is desirable to prevent corrosion and deterioration. It will not absorb moisture, is dense and very adhesive, sets with practically no shrinkage, is pliable at all times (even in coldest weather), is free from all chemical impurities, and is acid-proof. It meets A.A.R., Signal Section, Specification No. 184.

Victolac No. 25 is especially suitable for use where there is a wide fluctuation in prevailing temperatures, as it has a remarkably constant volume notwithstanding temperature changes. For voltages up to 6,000. Melting point 180° F. Furnished only in 25-lb. cakes or 100-lb. cylindrical cartons.

Victolac No. 78: an especially high grade compound for voltages up to 22,000. Dielectric strength 940 volts per mil. Melting point 169°F. Furnished in one-gallon containers.

Ref. No.	Description	Piece No.
A	Victolac No. 25 in twenty-five lb. cake	25-25
B	Victolac No. 25 in 100-lb. carton	25-100
C	Victolac No. 78 in one-gallon can	78-1

Cold Application Sealing Compounds

A.A.R., SIGNAL SECTION SPECIFICATION NO. 188

Ref. A

No. WL640 cold application sealing compound is for closing entrances to mechanism cases, switch circuit controllers, relay housings and cable outlets to exclude insects, vermin and rodents. It can be applied and removed at ordinary temperatures.

Available in one-gallon containers packed 4 to a carton.

SIGNAL CEMENT

Ref. B

A plastic cement for sealing lenses in place, wire entrances in relay cases, bootlegs, cable junction boxes, cabinets, etc. It is elastic, adhesive, and will not run in heat. It retains these qualities for years, permitting removal of wires and the running of new wires without replacing the wire entrance seal. Furnished in gray or black. The ingredients are not toxic to the skin, yet they repel rodents.

Available in one gallon containers, packed four to the case. Supplied in gray or black.

Ref. No.	Description	Piece No.
A	Cold working sealing compound, one-gallon container	WL640
B	Signal Cement, one-gallon container, gray	7202
B1	Same as Ref. B, but black	7209

BOOTLEGS

CONTENTS

	Page No.
Bootlegs	7-2 to 7-9
Connectors	7-10 to 7-12
Channel Pins and Punches	7-15
Bonding Drill	7-16 to 7-20
Bonding Drill Bits	7-17
Cable Marker	7-25
Victolac Insulating and Cable Paint	730
Victolac Sealing Compounds	7-31
Cold Application Sealing Compounds	7-32
Signal Cement	7-32

WESTERN-CULLEN-HAYES, Inc.
2700 West 36th Place • Chicago, Illinois 60632 • Telephone: 312/254-9600 • Telex 25-3206

Type 1184 Bootleg

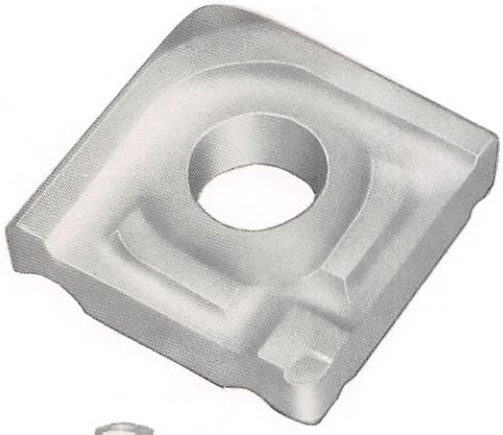

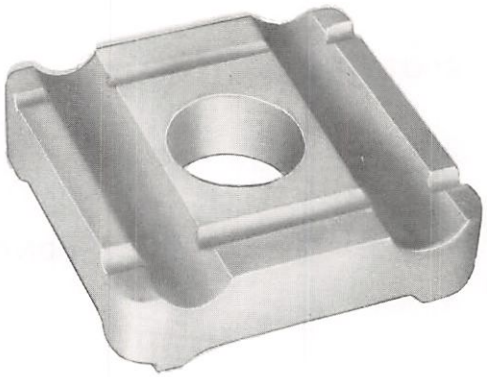

No. 1184-17 Universal Clamp

No. 1184-24AR

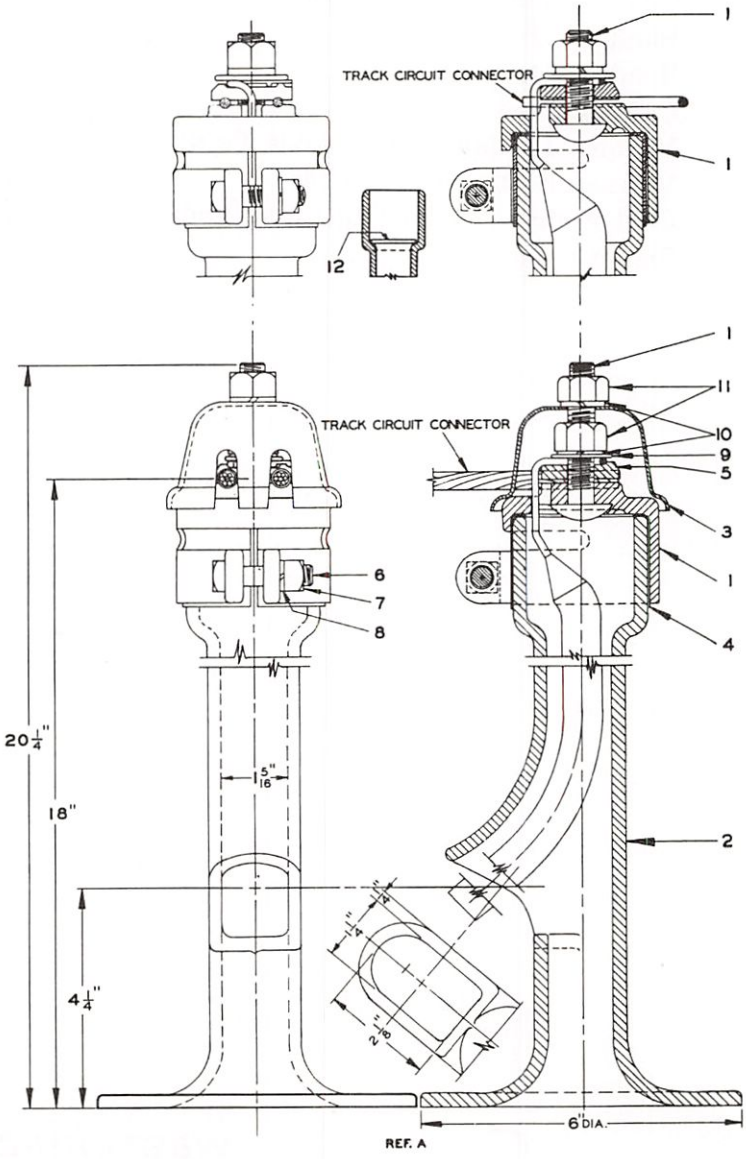

Type 1184 Bootleg

Type 1184 Parkway Cable Bootlegs have been designed for use with either one or two single conductor plug type track circuit connectors or one duplex conductor track circuit connector. The cast bronze clamping member is of universal design with grooves to accommodate any of the stranded conductors listed on A.A.R., Signal Section, Drawings 1631 and 1632. The Bootlegs are furnished with or without the slotted cover, as desired.

The riser is of cast grey iron, 1¼" inside diameter, and has a side entrance for the parkway cable, located 4¼" above the bottom of the base.

The height from the bottom of the base to the rail connectors is 18". Overall height of the bootleg with cover is 20¼" and that of the one without a cover is 19½".

The malleable iron bootleg head and the slotted steel cover are hot galvanized. All other hardware is cadmium plated except the 1/2" lock washers which are bronze, unplated.

The bootleg head is insulated from the riser by a 1/16" thick hard fibre sleeve.

The clamping bolt is permanently attached to the head casting.

Ref. No.	Description	Piece No.
A	Type 1184 Bootleg complete, with cover	1184-24AR
A1	Same as Ref. A, but without cover	1184-24BR
A2	Same as Ref. A without cover but with black fibre washer (Ref. 12) in riser	1184-24CR
A3	Same as Ref. A less riser	1184-24A
A4	Same as Ref. A less riser and cover	1184-24B
A5	Same as Ref. A less riser and cover but with black fibre washer (Ref. 12) to be placed in riser	1184-24CRB
	REPLACEMENT PARTS	
1	Head Casting and Carriage bolt as used with cover	1184-7
1A	Same as Ref. 1 but as used without cover	1184-7B
2	Riser	1178-23
3	Cover	1184-36
4	Insulating cap	1184-6
5	Universal clamp	1184-17
6	3/8" - 16 x 1½" lg. sq. hd. bolt, stl. (cad. pl.)	
7	3/8" - 16 sq. nut, stl. (cad. pl.)	
8	3/8" lock washer, stl. (cad. pl.)	
9	Washer, rounded edge, stl. (cap. pl.)	1186-12
10	1/2" lock washer, bronze	
11	1/2" - 13 hex. nut stl. (cad. pl.)	
12	Black fibre washer	1184-29

Type 1186-32 Bootlegs

The Type 1186-32 Parkway Cable Bootlegs are designed for use with two parkway cable wires and two single conductor or one duplex conductor track circuit connectors. The mechanical clamp is of universal design to accommodate any of the stranded conductors listed on A.A.R., Signal Section, Drawings 1631 and 1632.

Parkway Cable wires are brought up through two holes in the bottom of the solderwell and terminated under rounded-edged, flat, washers on the 1/2″ bolt.

Track circuit connectors enter the solderwell, when required, through holes of appropriate size, drilled flush with the bottom of the grooves in the bootleg head. Thus the cable wires and track circuit connectors are mechanically supported and electrically connected by pressure on the bolt assembly. Soldered electrical connection can be made, when desired, by pouring molten solder into the well.

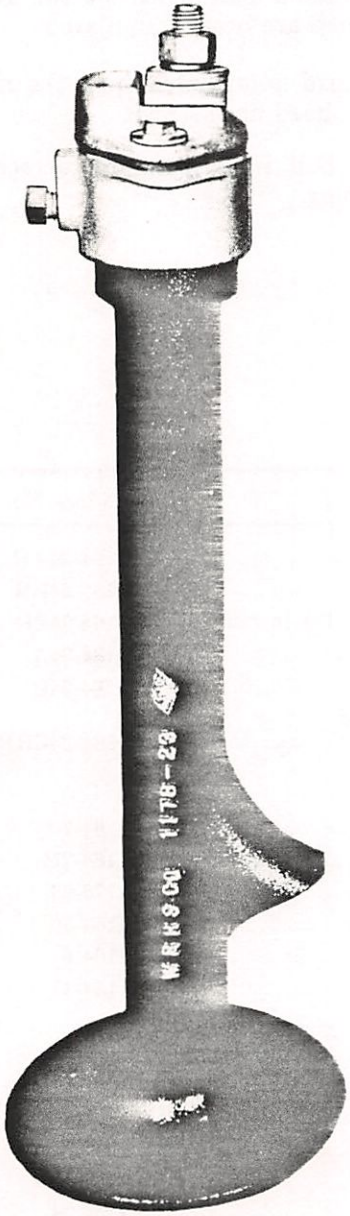

No. 1186-32AIR

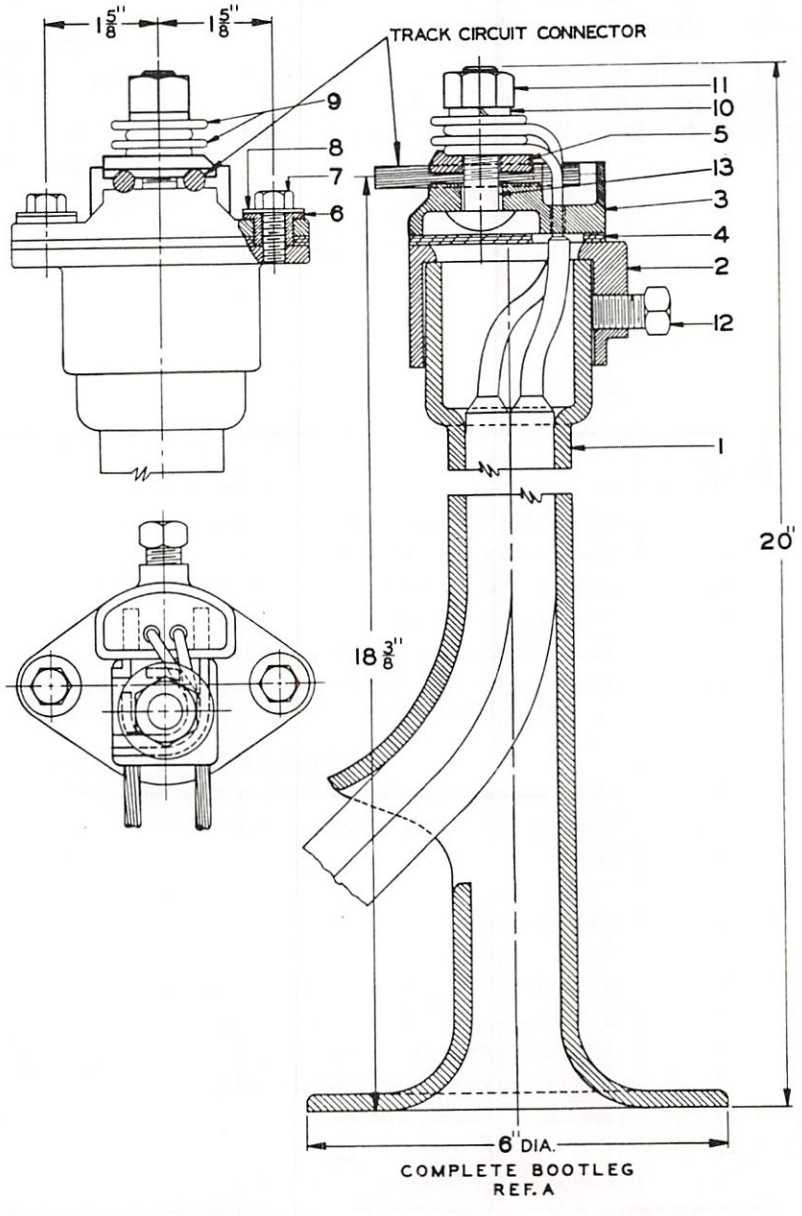

COMPLETE BOOTLEG
REF. A

Type 1186-32 Bootlegs

The holes in the bottom of the solderwell are for use with #6 to #10 solid conductor parkway cable wires. The ordering reference table, below, shows the data for the various sizes of stranded track circuit connector which each design will accommodate.

The riser is of cast grey iron, 1¼" inside diameter, and has a side entrance for the parkway cable, located 4¼" above the base.

The height from bottom to the track circuit connectors is 18⅜" and the overall height of the bootleg is 20".

The cap is of cast grey iron secured to the riser by a 1/2", cup point set screw. The grooved head and solderwell casting is malleable iron insulated from the cap by a hard fibre plate. Cap screws are Everdue bronze insulated from the head casting by Nylon Bushings. The head and cap castings are hot-galvanized. All other hardware is cadmium plated except the 1/2" lockwasher which is bronze, unplated.

The Universal Clamp illustrated on page 7-2 is supplied with this bootleg.

Ref. No.	Description	Solderwell Drilled for Track Circuit Connector Strand	Piece No.
A	Type 1186-32 Bootleg complete	Not drilled	1186-32AR
A1	Type 1186-32 Bootleg complete	3/16" dia.	1186-32BR
A2	Type 1186-32 Bootleg complete	7 - #12 A.W.G.	1186-32CR
A3	Type 1186-32 Bootleg complete	7 - #10 A.W.G.	1186-32DR
A4	Type 1186-32 Bootleg complete	7 - #12 B.W.G.	1186-32ER
A5	Type 1186-32 Bootleg complete less riser	Not drilled	1186-32A
A6	Type 1186-32 Bootleg complete less riser	3/16" dia.	1186-32B
A7	Type 1186-32 Bootleg complete less riser	7 - #12 A.W.G.	1186-32C
A8	Type 1186-32 Bootleg complete less riser	7 - #10 A.W.G.	1186-32D
A9	Type 1186-32 Bootleg complete less riser	7 - #12 B.W.G.	1186-32E
	REPLACEMENT PARTS		
1	Riser		1178-23
2	Cap		1186-8
3	Head, not drilled for track circuit connector		1186-72G
3A	Head, drilled for 3/16" dia. strand		1186-72E
3B	Head, drilled for 7 - #12 A.W.G. strand		1186-72D
3C	Head, drilled for 7 - #10 A.W.G. strand		1186-72C
3D	Head, drilled for 7 - #12 B.W.G. strand		1186-72A
4	Insulating plate		1186-9
5	Universal clamp		1184-17
6	Insulating bushing, nylon		1184-10N
7	5/16" - 18 x 7/8" hex. hd. cap. sc., bronze		
8	Washer 11/32" I.D. x 11/16" O.D. x 1/16" thick, bronze		
9	Washer, rounded edge, stl. (cad. pl.)		1186-12
10	1/2" lock washer, bronze		
11	1/2" - 13 hex. nut, stl. (cad. pl.)		
12	1/2" - 13 x 3/4" sq. hd. cup pt. set screw, stl. (cad. pl.)		
13	Carriage bolt 1/2" - 13 x 2" lg. (cad. pl.)		

Type 1186-33 Bootlegs

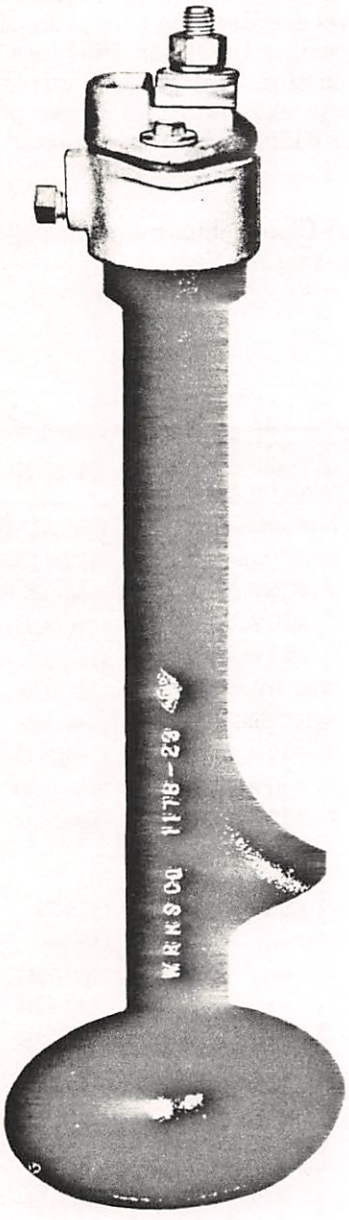

No. 1186-33

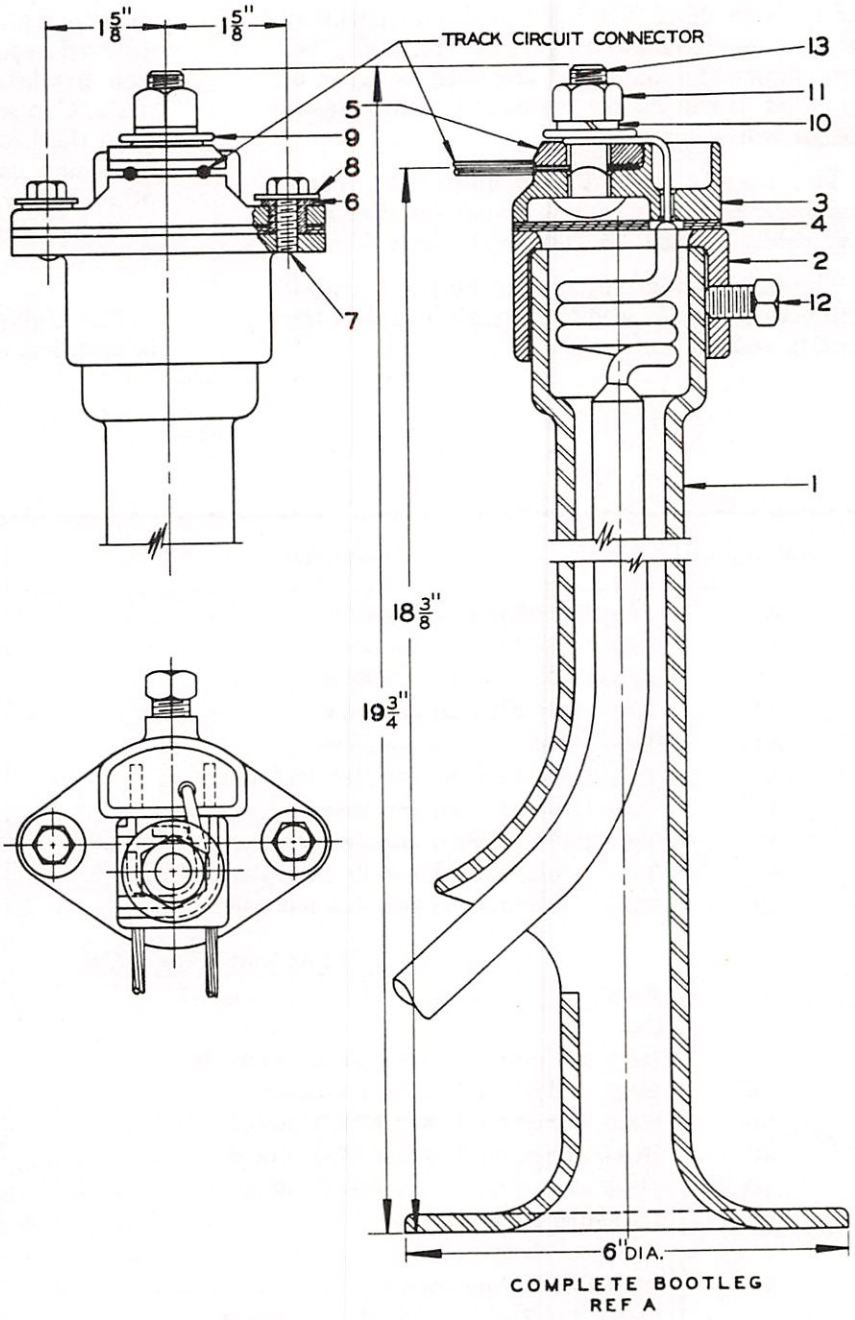

COMPLETE BOOTLEG
REF A

Type 1186-33 Bootlegs

The Type 1186-33 Parkway Cable Bootlegs are identical with the Type 1186-32 Bootlegs, described on the preceeding pages, except that they are designd for use with one Parkway Cable, and therefore, have but one hole drilled in the bottom of the solderwell for one #6 to #10 A.W.G., solid conductor parkway cable wire.

Ref. No.	Description	Solderwell Drilled for Track Circuit connector strand	Piece No.
A	Type 1186-33 Bootleg complete	Not Drilled	1186-33AR
A1	Type 1186-33 Bootleg complete	3/16" dia.	1186-33-BR
A2	Type 1186-33 Bootleg complete	7 - #12 A.W.G.	1186-33CR
A3	Type 1186-33 Bootleg complete	7 - #10 A.W.G.	1186-33DR
A4	Type 1186-33 Bootleg complete	7 - #12 B.W.G.	1186-33ER
A5	Type 1186-33 Bootleg complete less riser	Not Drilled	1186-33A
A6	Type 1186-33 Bootleg complete less riser	3:16" dia.	1186-33B
A7	Type 1186-33 Bootleg complete less riser	7 - #12 A.W.G.	1186-33C
A8	Type 1186-33 Bootleg complete less riser	7 - #10 A.W.G.	1186-33D
A9	Type 1186-33 Bootleg complete less riser	7 - #12 B.W.G.	1186-33E
	REPLACEMENT PARTS		
1	Riser		1178-23
2	Cap		1186-8
3	Head, not drilled for track circuit connector		1186-71G
3A	Head, drilled for 3/16" dia. strand		1186-71E
3B	Head, drilled for 7 #12 A.W.G. strand		1186-71D
3C	Head, drilled for 7 #10 A.W.G. strand		1186-71C
3D	Head, drilled for 7 #12 B.W.G. strand		1186-71A
4	Insulating plate		1186-9
5	Universal clamp		1184-17
6	Insulating bushing, nylon		1186-10N
7	5/16" - 18 x 7/8" hex. hd. cap. scr., bronze		
8	Washer 11/32" I.D. x 11/16" O.D. x 1/16" thick, bronze		
9	Washer, rounded edge, stl. (cad. pl.)		1186-12
10	1/2" lock washer, bronze		
11	1/2" - 13 hex. nut, stl. (cad. pl.)		
12	1/2" - 13 x 3/4" sq. hd. cup pt. set screw, stl. (cad. pl.)		
13	Car. bolt 1/2" x 1¾" lg. (cad. pl.)		

Type 1155 Bootleg

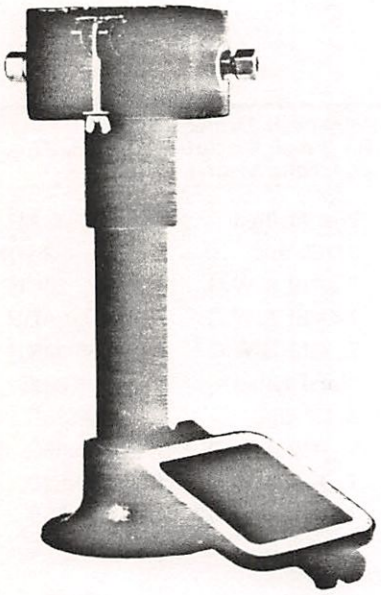

No. 1155-161B

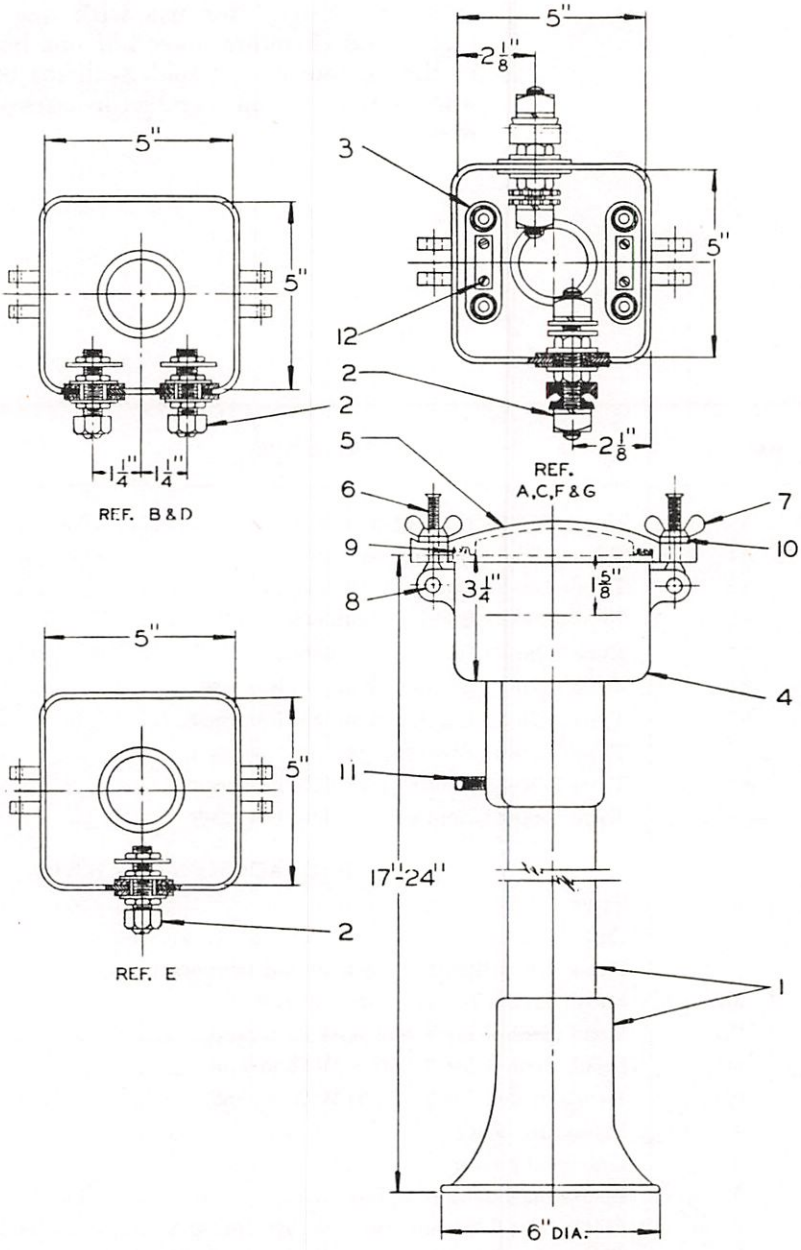

Type 1155 Bootleg

Type 1155 Bootleg has an extra large head. As many as four A.A.R. porcelain terminals may be installed in the head. Any connector shown on pages 7-10 and 7-11 may be furnished with this bootleg. Type 1155-31 Mechanical Connector for 7 - #10 A.W.G., 7 - #12 A.W.G., or 7 - #14½ B.W.G. strands is especially popular in Type 1155 Bootleg assemblies.

Standard height, 17″ overall; riser 2″ I.D.; head 5″ sq. by 3¼″ deep.

A riser is also available, when specified, to provide 24″ overall height.

Ref. No.	Description	Piece No.
A	Type 1155 Bootleg with two type 1170-41 connectors and two A.A.R. terminal blocks	1155-161B
B	Type 1155 Bootleg with two type 1170-39A connectors on one side	1155-276
B1	Same as Ref. B less connectors	1155-276A
C	Type 1155 Bootleg with two type 1170-39A connectors, one on each side	1155-277
D	Type 1155 Bootleg with two type 1170-32 connectors on one side	1155-278
E	Type 1155 Bootleg with one type 1170-41 connector	1155-161C
F	Type 1155 Bootleg with one type 1155-241 connector	1155-185
F1	Same as Ref. F less pipe and base	1155-185A
G	Type 1155 Bootleg with two type 1155-241 connectors, one on each side	1155-186
G1	Same as Ref. G less pipe and base	1155-186A
	REPLACEMENT PARTS	
1	Pipe and base sub-assembly for 17″ overall height	1155-58
1A	Pipe and base sub-assembly for 24″ overall height	1155-58F
2	Connector for Ref. A	1170-41
2A	Connector for Ref. B&C	1170-39A
2B	Connector for Ref. D	1170-32
2C	Connector for Ref. E	1170-41
2D	Connector for Ref. F&G	1155-241
3	AAR terminal block	1056-10
4	Top casting for Ref. A	1155-23BF
4A	Top casting for Ref. B&D	1155-23Z
4B	Top casting for Ref. C	1155-23ZA
4C	Top casting for Ref. E	1155-123D1
4D	Top casting for Ref. F	1155-23BG
4E	Top casting for Ref. G	1155-23BH
5	Cover	1155-122
6	Eyebolt	1247-4
7	Wing nut	1247-5
8	3/16″ dia. x 1½″ lg. rd. hd. rivet (brass)	
9	7/16″ dia. x 18″ lg. Torchwick Packing	
10	.337″ I.D. x 7/8″ O.D. plain washer (brass)	
11	3/8″ - 16 x 5/8″ lg. cup point set screw, stl	
12	No. 10 - 32 x 3/4″ lg. rd. hd. machine screw (brass)	

(For connector parts see page 7-11)

Type 1155 Connector

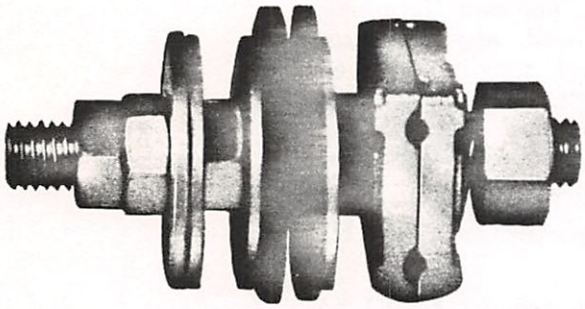

Ref. A

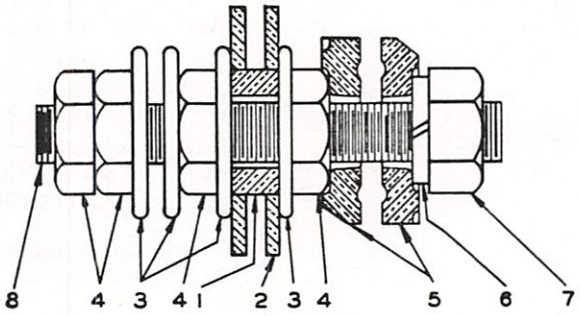

This connector consists of a 1/2″ threaded steel rod 4″ long, with steel washers, steel hex. nuts for clamping to the wall of the bootleg, hex. nuts for terminating the wires, complete with bronze universal wire clamps, and necessary bakelized canvas insulation. All steel parts are hot galvanized.

Type 1155-241 (Ref. A) has a 3/8″ long insulating bushing for 3/16″-1/4″ thick wall and Type 1155-241A (Ref. A1) has a 5/8″ long insulating bushing for 5/16″-3/8″ thick wall. Both types are used for #6 A.W.G. wire and 7 #10 A.W.G., 7 #12 A.W.G., or 7 #14½ A.W.G. strands.

Ref. No.	Description	Piece No.
A	Type 1155 Connector with 1″ O.D. x 9/16″ I.D. x 3/8″ lg. insulating bushing	1155-241
A1	Same as Ref. A but with 5/8″ lg. insulating bushing	1155-241A
	REPLACEMENT PARTS	
1	Insulating bushing 1″ O.D. x 9/16″ I.D. x 3/8″ lg.	1155-34
1A	Insulating bushing 1″ O.D. x 9/16″ I.D. x 5/8″ lg.	1155-34A
2	Insulating washer	1155-35
3	1/2″ standard steel washer (cad. pl.)	1155-36
4	1/2″-13 hex. jam nut	
5	Universal clamp	1184-17
6	1/2″ standard lock washer	
7	1/2″-13 standard hex. nut	
8	Threaded rod 1/2″-13	1155-40

Type 1170 Connectors

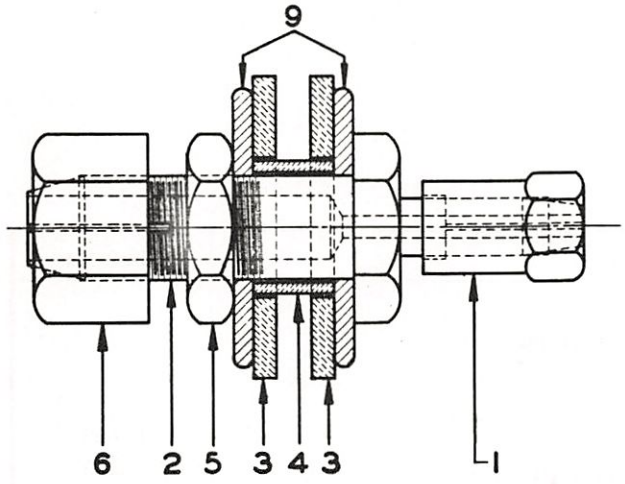

Ref. A

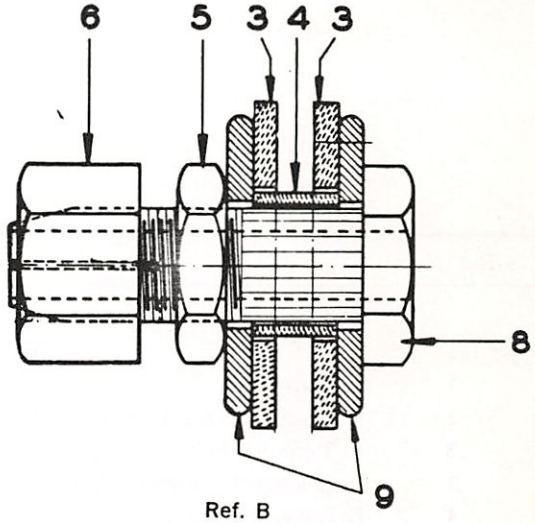

Ref. B

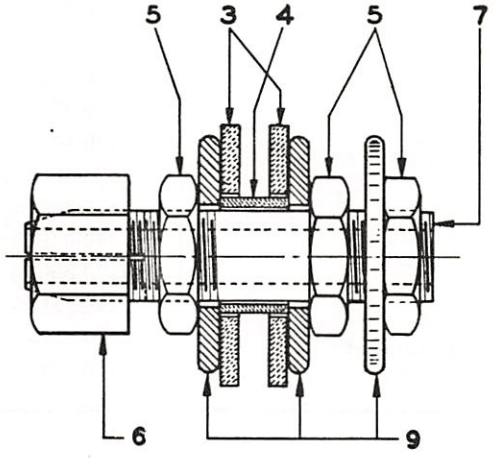

Ref. C

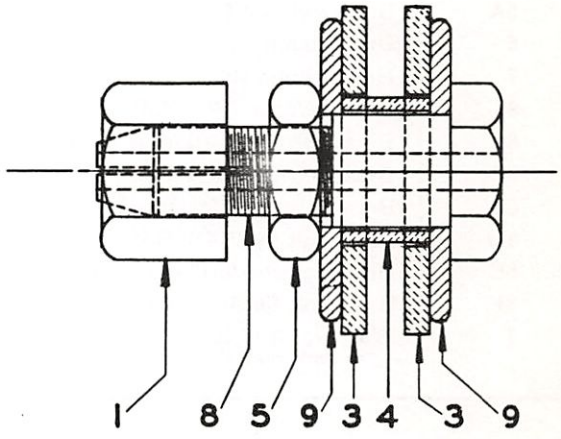

Ref. D

These connectors are made of hollow brass studs with brass clamps and lock nuts, electro galvanized steel washers, and highest grade bakelized canvas insulation. Ref. A connector is for terminating #9 A.W.G. solid copper wire and strand composed of 7#10 A.W.G. wires.

Ref. No.	Description	Piece No.
A	Type 1170 Connector complete (used with Type 1155-278 bootleg)	1170-32
B	Type 1170 Connector complete for 7 #10 A.W.G. strand	1170-39
B1	Same as Ref. B but for 7 #12 A.W.G. strand	1170-39A
B2	Same as Ref. B but for 7 #14½ A.W.G. strand	1170-39B
B3	Same as Ref. B but for 3/8" strand	1170-39C
B4	Same as Ref. B but for 7 #12 B.W.G. strand	1170-39D
B5	Same as Ref. B but for .251" dia. strand	1170-39F
C	Type 1170 Connector complete (used with Type 1155-161B and 1155-161C)	1170-41
D	Type 1170 Connector complete for 3/16" stranded bond	1170-139
D1	Same as Ref. D but less Ref. 3, 4 and 9	1170-139X

Parts list on following page

Type 1170 Connectors

Ref. No.	Description	Piece No.
	REPLACEMENT PARTS	
1	Clamp nut	1170-29
1A	Clamp nut for Type 1170-139 connector	1170-137
2	Terminal bolt	1170-30
3	Bakelized canvas washer 1/8" thick x 3/4" I.D. x 1⅝" O.D.	1170-34
4	Bakelized canvas bushing	1170-35
5	Brass lock nut, 1/4" thick	1170-36
5A	Brass lock nut for Type 1170-139 connector	1170-136
6	Brass clamp nut	1170-37
7	Hollow brass stud	1170-44
8	Brass bolt for 7-#10 A.W.G. strand	1170-38
8A	Brass bolt for 7-#12 A.W.G. strand	1170-38A
8B	Brass bolt for 7-#14½ A.W.G. strand	1170-38B
8C	Brass bolt for 3/8" strand	1170-38C
8D	Brass bolt for 7-#12 B.W.G. strand	1170-38D
8E	Brass bolt for .251" dia. strand	1170-38E
8F	Brass bolt for 3/16" strand	1170-138
9	Washer, 7/64" thick x 9/16" I.D. x 1⅜" O.D. stl. electro galvanized or cad. plated	

Channel Pins
TINNED

Single-Grooved Pin (A.A.R. 10861)

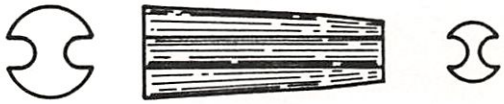

Double-Grooved Pin (A.A.R. 10862)

Ref. No.	Description	Piece No.
A	Single-Grooved Channel Pin, Tinned	339
B	Double-Grooved Channel Pin, Tinned	342

Channel Pin Punches and Sets

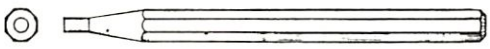

Ref. C

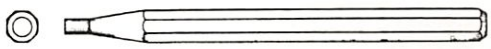

Ref. D

Ref. E

Ref. F

For Single-Grooved 9/32" Pins

For Double-Grooved 3/8" Pins

Ref. No.	Description	Piece No.
C	Standard Channel Pin Punch for 9/32" single grooved pins	1852
D	Standard Channel Pin Drift Punch for 9/32" single grooved pins	1853
E	Standard Channel Pin Punch for 3/8" double grooved pins	1855
F	Standard Channel Pin Drift Punch for 3/8" double grooved pins	1856

Bonding Drill

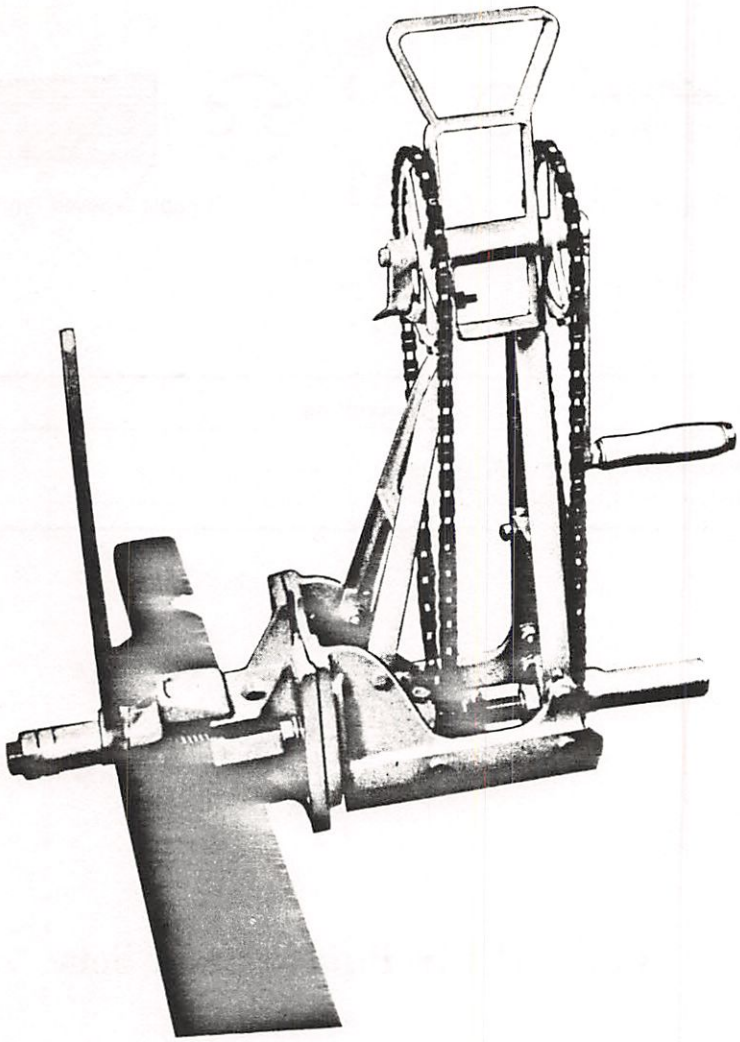

BONDING DRILL

The Western BW Bonding Drill is engineered to give Signalmen a safe economical means of accurately drilling holes in either the head or web of rail.

The Western BW Bonding Drill is a light weight, one-man tool, that can be easily carried and clamped to a rail head enabling the efficient drilling of bonding holes in all types and weight of rail from 80 to 150 pounds.

Simple attachment and precision adjustment features insure ease of operation and absolute accuracy. These features have won wide approval and acceptance as standard equipment by the Nation's leading railroads.

FEATURES

Frame constructed of light weight, high strength, malleable iron. Efficient lubrication of all bearings is attained through ball-valve oil fittings.

Depth gauge adjusting nuts which are easily set to accurately determine the depth of hole to be drilled.

Positive drilling feed is provided through a special gear reduction system.

Drill rigidly mounted to the head of a rail with one single movement of the clamp lever.

Adjustable so the drill may be positioned to drill at any height in either web or head of rail.

Bonding Drill

The Western BW Bonding Drill is available with various types of chuck and spindle assemblies for use with 9/32″ or 3/8″ diameter drill bits, as specified in listing below.

Ref. No.	Description	Piece No.
A	Type HD-185 Bonding Drill with 9/32″ Hyduty chuck and spindle	HD185-A
B	Type HD-185 Bonding Drill with 3/8″ Hyduty chuck and spindle	HD185-B
C	Type HD-185 Bonding Drill with 9/32″ set screw spindle	HD185-C
D	Type HD-185 Bonding Drill with 3/8″ set screw spindle	HD185-D
E	Type HD-185 Bonding Drill with 3/8″ collet chuck and spindle	HD185-E

See pages 7-18 to 7-20 for Replacement Parts.

Bonding Drill Bits

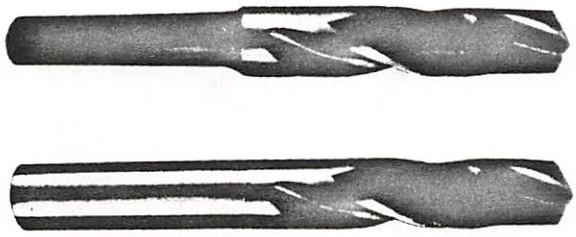

Made of the toughest high speed steel for long performance, accurate hole size and user satisfaction. All sizes are 3″ long.

Ref. No.	Description	Piece No.
A	High Speed bonding drill bit, 9/32″ dia., flatted shank	1452
B	High Speed bonding drill bit, 3/8″ dia., with 9/32″ flatted shank	1454
B1	Same as Ref. B but with 3/8″ flatted shank	1455
B2	Same as Ref. B but with 3/8″ round shank	1455R

Bonding Drill

REPLACEMENT PARTS

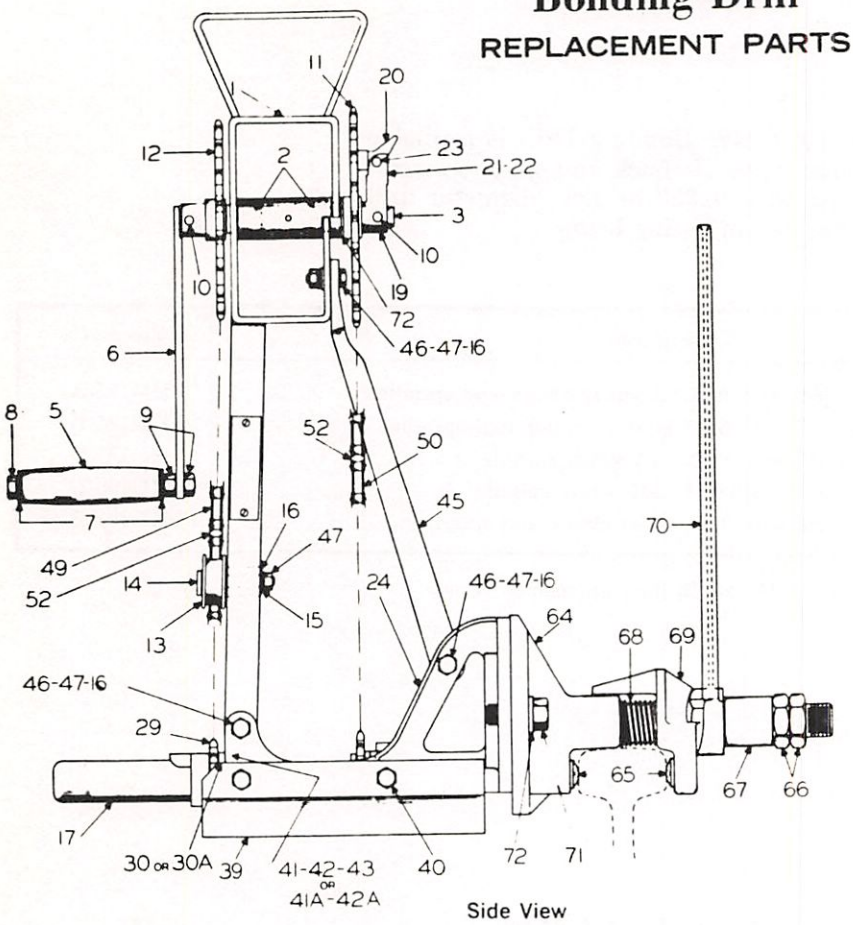

Side View

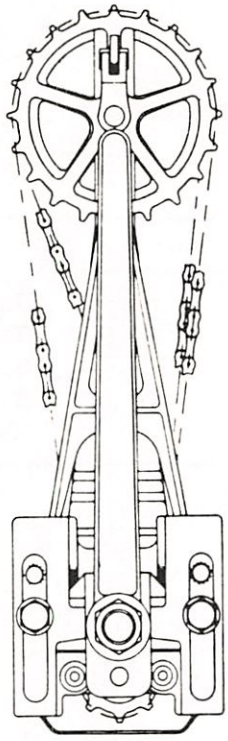

End View

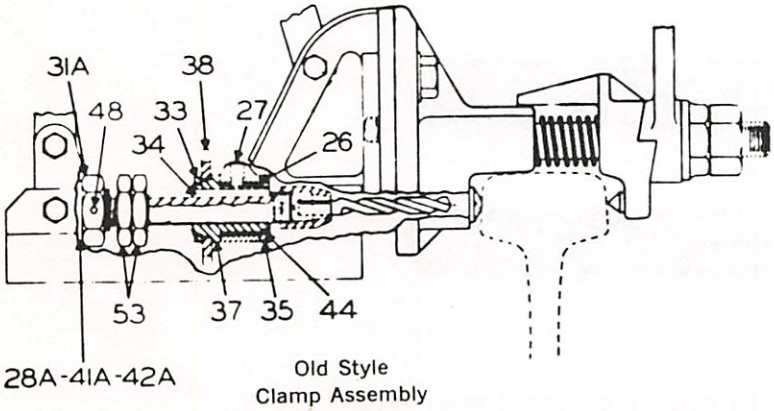

Old Style
Clamp Assembly

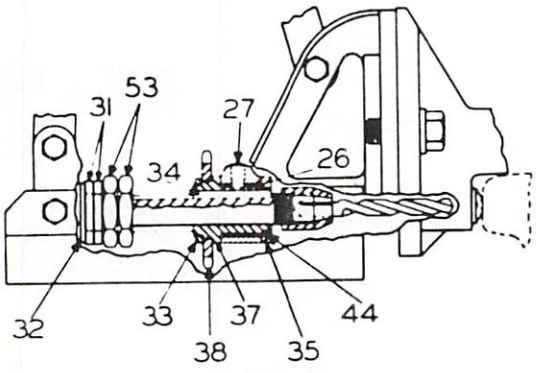

Drive & Feed
Mechanism

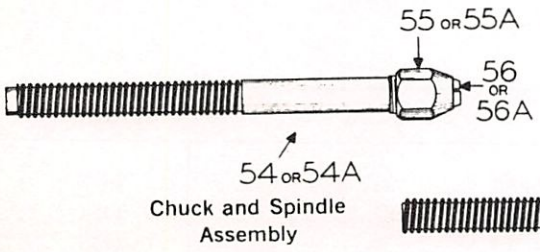

Chuck and Spindle
Assembly

Set Screw Spindle Assembly

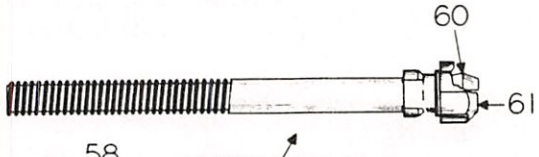

Spindle and Collet
Chuck Assembly

Bonding Drill

REPLACEMENT PARTS

Ref. No.	Qty. Reg.	Description	Piece No.
1	1	Upper frame and bushing assembly (18-20) Gear Ratio	HD-161
2	2	*Upper frame bushing	HD-68
3	1	Crankshaft	HD-3
4	1	Crank Assembly complete	HD-177
5	1	*Crank handle	HD-19
6	1	*Crank	HD-13
7	2	*Flat washer 3/8" nom. dia.	106263
8	1	*Crankshaft capscrew 7/16" - 14 x 5½" hex	250481
9	2	*Hex. nut 7/16" - 14	102636
10	2	Crankshaft pins	251754
11	1	Crank feed sprocket—20 teeth	HD-105
12	1	Crank feed sprocket—18 teeth	HD-106
13	1	Idler sleeve	HD-93
14	1	Idler to frame brace stud	HD-94
15	1	Lock washer 5/16" dia.	103320
16	6	Flat washer 5/16" nom. dia.	103340
17	1	Feed screw shield	MS-608-A
18	1	Pawl arm assembly complete	HD-176
19	1	*Pawl arm	HD-16
20	1	*Pawl	HD-17
21	1	*Pawl plunger	HD-32
22	1	*Pawl spring	HD-34
23	1	Pawl rivet 3/16" dia. x 7/8" button hd.	104070
24	1	Lower frame and bushing assembly	HD-158
26	1	*Drive sleeve bushing	HD-48
27	2	*Frame Oilers	250389
28	1	Feed sprocket assembly complete	HD-210
28A	1	Feed sprocket assembly complete	HD-232
29	1	*Feed sprocket—7 teeth	HD-7
30	1	*Feed nut	HD-24
30A	1	*Feed nut	HD-229
31	2	Feed nut adjusting nut	HD-27
31A	1	Feed nut adjusting nut	HD-231
32	1	Feed nut adjusting nut washer	HD-28
33	1	Drive sleeve locknut	HD-29
34	1	Drive sleeve key	HD-76
35	1	Drive sleeve collar	HD-30
36	1	Drive sleeve assembly complete	HD-206
37	1	*Drive sleeve	HD-4
38	1	*Drive sleeve sprocket—8 teeth	HD-9
39	1	Lower frame shield	HD-66
40	4	Shield capscrew 3/8" - 16 x 1/2"	106974
41	1	Bearing	M-2984
41A	1	Bearing	M-3408
42	1	Washer	M-2985
42A	1	Washer	M-3411
43	1	Washer	M-2986
44	1	Drive collar pin 1/8" dia. x 1⅜" lg.	HD-203
45	1	Frame brace	HD-154
46	5	Capscrew 5/16" - 18 x 1¼" lg. hex. hd.	100122

*Parts Indented are included in the Part under which they are Indented.

Replacement Parts List continued on following page.

Bonding Drill

REPLACEMENT PARTS

(continued)

Ref. No.	Qty. Req.	Description	Piece No.
47	6	Hex. nut 5/16" - 18	102634
48	1	No. 10 - 24 x 1/4" lg. hex socket cup point set screw	
49	1	Feed chain — 47 links	HD-207
50	1	Feed chain — 48 links	HD-187
52	2	Chain connecting link	251045
53	2	Feed depth gauging nut	HD-103
		CHUCK AND SPINDLE ASSEMBLY (For 9/32" Flatted Shank Bit)	
54	1	Chuck and Spindle Assembly	HD-97
55	1	*Chuck only	HD-72
56	1	*Jaw only	HD-71
		(For 3/8" Flatted Shank Bit)	
54A	1	Chuck and Spindle assembly	HD-98
55A	1	*Chuck only	HD-78
56A	1	*Jaw only	HD-79
		SETSCREW SPINDLE ASSEMBLY (For 9/32" Flatted Shank Bit)	
57	1	Setscrew Spindle Assembly	HD-178
58	1	Spindle Setscrew 5/16" - 18 x 1/2" squarehead	102881
		(For 3/8" Flatted Shank Bit)	
57A	1	Setscrew Spindle Assembly	HD-179
58	1	Spindle Setscrew 5/16" - 18 x 1/2" squarehead	102881
		SPINDLE AND COLLET CHUCK ASSEMBLY (For 3/8" Round Shank Bit)	
59	1	Spindle and Collet Chuck Assembly	M-3192
60	1	Collet only	M-3189
61	1	Spindle nut only	M-3190
		CURRENT TYPE C RAIL CLAMP ASSEMBLY	
63	1	Rail Clamp assembly	M-3185
64	1	*Stationary jaw assembly complete	M-3186
65	3	*Stationary and movable jaw points	M-2989
66	2	*Stationary jaw check nut—1" - 14 hex	115781
67	1	*Stationary jaw spacer	HD-223
68	1	*Moveable jaw release spring	HD-123
69	1	*Moveable jaw assembly complete	M-3187
70	1	*Moveable jaw hand clamping lever	HD-122
71	2	Stationary jaw capscrew—5/8" - 11 x 1½"	100184
72	3	Special washer	P-175
73	2	Stationary jaw wrench (not shown)	HD-225
		HD183 OLD STYLE TYPE C RAIL CLAMP ASSEMBLY (No longer in Production; order Ref. 63)	

*Parts Indented are included in the Part under which they are Indented.

HD 350 ---BONDING DRILL

Bonding Drill

REPLACEMENT PARTS

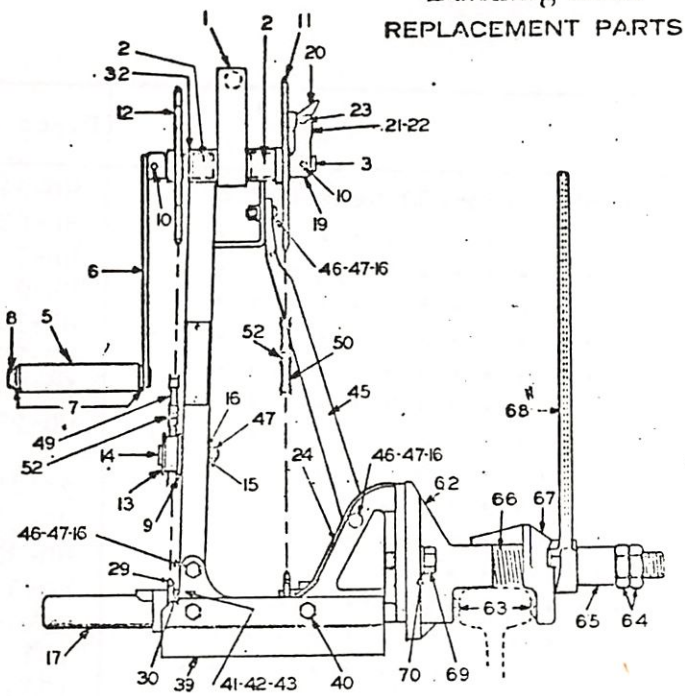

Side View

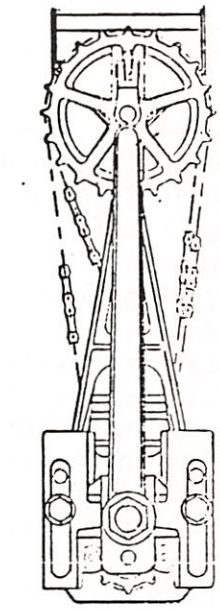

End View

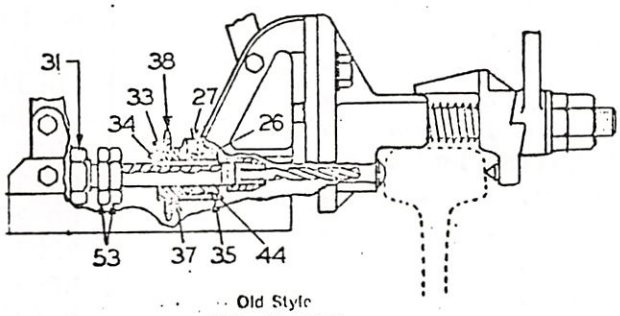

Old Style
Clamp Assembly

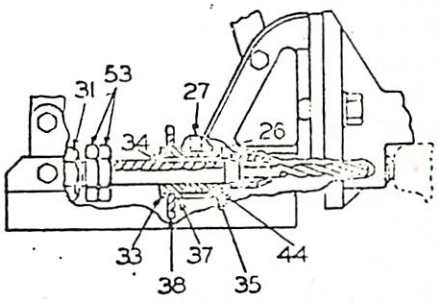

Drive & Feed
Mechanism

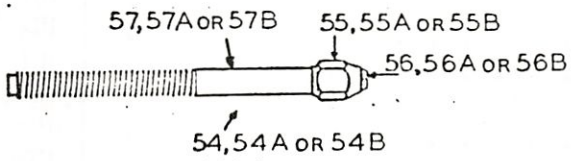

Chuck and Spindle
Assembly

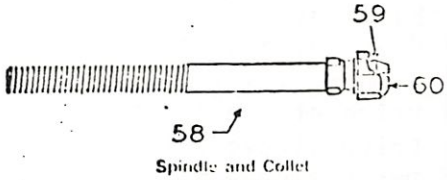

Spindle and Collet
Chuck Assembly

WC Hayes

WESTERN-CULLEN-HAYES, Inc.

2700 West 36th Place • Chicago, Illinois 60632 • Telephone: 312/254-9600 • Telex 25-3206

Ref.No	Qty. Req'd	Description	Piece No.
1	1	Upper frame and bushing assembly (36-40) Gear Ratio . .	HD-364
2	2	*Upper frame bushing	HD-68
3	1	Crankshaft.	HD-3
4	1	Crank Assembly complete	HD-273
5	1	*Crank handle.	HD-19
6	1	*Crank	HD-290
7	2	*Flat washer 7/16" nom. dia.	106263
8	1	Push nut.	HD-272
9	1	½ Plain washer Type B (N)	
10	2	Crankshaft pins	251754
11	1	Crank feed sprocket - 40 teeth.	HD-354
12	1	Crank feed sprocket - 36 teeth.	HD-353
13	1	Idler sleeve.	HD-357
14	1	Idler to frame brace stud	HD-94
15	1	Lock washer 5/16" dia..	103320
16	6	Flat washer 5/16" nom. dia.	103340
17	1	Feed screw shield	MS-608-A
18	1	Pawl arm assembly complete.	HD-176
19	1	*Pawl arm.	HD-16
20	1	*Pawl.	HD-17
21	1	*Pawl plunger.	HD-32
22	1	*Pawl spring	HD-34
23	1	Pawl rivet 3/16" dia. x 7/8" button hd.	104070
24	1	Lower frame and bushing assembly.	HD-365
26	1	*Drive sleeve bushing.	HD-254
27	2	*Frame oilers.	250389
28	1	Feed sprocket assembly complete	HD-355
29	1	*Feed sprocket - 14 teeth.	HD-351
30	1	*Feed nut.	HD-312
31	1	Feed nut adjusting nut.	HD-303
32	1	Washer.	HD-363
33	1	Drive sleeve locknut.	HD-29
34	1	Drive sleeve key.	HD-76
35	1	Drive sleeve collar	HD-30
36	1	Drive sleeve assembly complete.	HD-356
37	1	*Drive sleeve.	HD-310
38	1	*Drive sleeve sprocket - 16 teeth.	HD-352
39	1	Lower frame shield.	HD-66
40	4	Shield capscrew 3/8" - 16 x 1/2".	106974
41	1	Bearing	M-3408
42	1	Washer.	3-B-131
43	1	Internal ring	M-3532
44	1	Drive collar pin 1/8" dia. x 1-3/8" lg.	HD-293
45	1	Frame brace	HD-154

*Parts Indented are included in the Part under which they are indented.

Replacement Parts List continued on following page

WESTERN-CULLEN-HAYES, Inc.
2700 West 36th Place • Chicago, Illinois 60632 • Telephone: 312/254-9600 • Telex 25-3206

Ref. No	Qty. Req'd	Description	Piece No.
46	5	Capscrew 5/16" - 18 x 1¼" lg. hex. hd.	100122
47	6	Hex nut 5/16" - 18	102634
49	1	Feed chain - 94 links.	HD-359
50	1	Feed chain - 96 links.	HD-360
52	2	Chain connecting link.	HD-361
53	2	Feed depth gauging nut	HD-103
		CHUCK AND SPINDLE ASSEMBLY (Model 350A) (For 9/32" Flatted Shank Bit)	
54	1	Chuck and spindle assy.	HD-313
55	1	*Chuck only	HD-264
56	1	*Jaw only	HD-265
57	1	*Spindle.	HD-322
		CHUCK AND SPINDLE ASSEMBLY (Model 350B) (For 3/8" Flatted Shank Bit)	
54A	1	Chuck and spindle assy	HD-314
55A	1	*Chuck only	HD-264
56A	1	*Jaw only	HD-265
57A	1	*Spindle.	HD-323
		CHUCK AND SPINDLE ASSEMBLY (Model 350E)	
54B	1	Chuck and spindle assy	HD-317
55B	1	*Chuck only	M-3190
56B	1	*Jaw only	M-3189
57B	1	*Spindle S/A.	HD-318
		SPINDLE AND COLLET CHUCK ASSY. (Model 350D) (For 3/8" Round Shank Bit)	
58	1	Spindle and collet chuck assy.	HD-316
59	1	*Collet only.	M-3189
60	1	*Spindle nut only	M-3190
61	1	Rail clamp assy.	M-3185
62	1	*Stationary jaw assy complete	M-3186
63	3	*Stationary and movable jaw points.	M-2989
64	2	*Stationary jaw check nut - 1"-14hex.	122463
65	1	*Stationary jaw spacer.	HD-223
66	1	*Moveable jaw release spring.	HD-123
67	1	*Moveable jaw assy complete	M-3187
68	1	*Moveable jaw hand clamping lever	HD-338
69	2	Stationary jaw cpascrew 5/8-11x1½.	100184
70	2	Special Washer	P-175

*Parts Indented are included in the Part under which they are indented.

Replacement Parts List continued on following page

Ref. No.	Qty. Req'd.	Description	Piece No.
71	2	Stationary jaw wrench (Not Shown)	HD-225
72	1	Field replacement kit	HD-362
	1	*Feed sprocket (36T)	HD-353
	1	*Drive sprocket (40T).	HD-354
	1	*Feed nut sprocket (14T)	HD-351
	1	*Drive sleeve sprocket (16T)	HD-352
	1	*Feed chain 47" lg	HD-359
	1	*Drive chain 48" lg.	HD-360
	2	*Chain connecting links.	HD-361
	1	*Idler sleeve.	HD-357
	1	*Washer.	HD-363
	1	*Washer ½" plain Type B (N).	
	1	*Print assy. HD-350.	M-3625-W

*Parts Indented are included in the Part under which they are indented.

Replacement Parts List continued on following page

Cable Marker

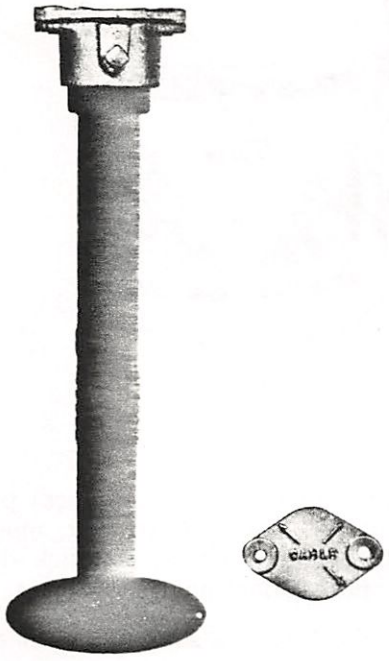

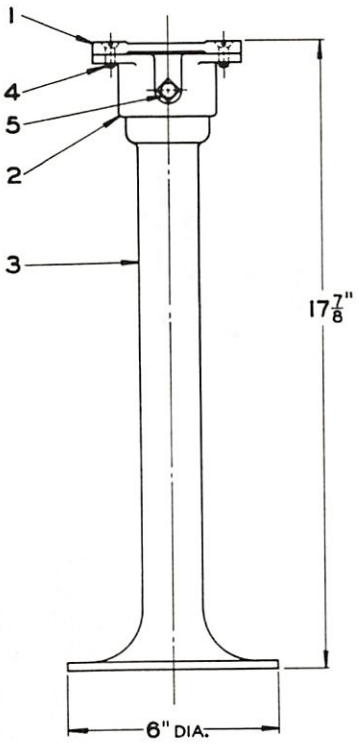

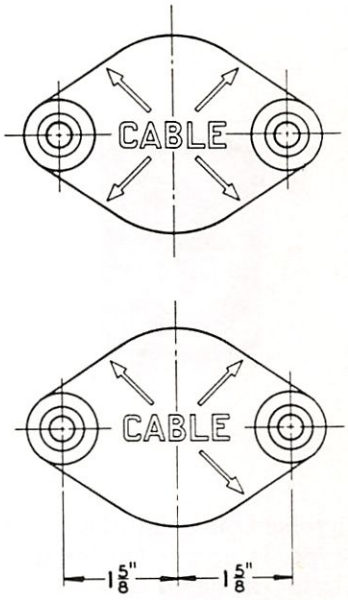

Type ES 1692 Cable Marker is for marking the route of the underground cable. By removing an arrow with a chisel the reversible top can be used for 90° turn or straight through designation.

Ref. No.	Description	Piece No.
A	Type ES 1692 Cable Marker complete	ES 1692
	REPLACEMENT PARTS	
1	Reversible Cable Marker Plate	ES 1692-1
2	Cap	1186-8
3	Riser	1178-23
4	5/16" - 18 x 3/4" lg. fl. hd. mach. sc.	
5	1/2" - 13 x 3/4" lg. sq. hd. cup pt. steel set sc.	

Victolac Universal Black

INSULATING PAINT

CABLE PAINT

Ref. A

Ref. B

Ref. F

Victolac Universal Black, of the volatile thinner type, is unexcelled for use in painting and insulating soldered and taped joints, junction boxes, switchboards, cables, battery racks, storage batteries, transformers, switch rod or rail insulations, and in fact, for all purposes where an insulating and protective paint or varnish is required.

Victolac No. 11 is the ideal material in its field, because while it dries quickly with a permanent hard, glossy surface, it will never chip, crack, nor deteriorate the insulation or other material with which it comes in contact. At the same time, it offers positive permanent protection against the effects of weather, moisture, acids, alkalies, gases, etc. It is quick drying, suitable for both indoor and outside use.

Victolac No. 12Q is a slightly slower drying compound meeting the requirements of A.A.R., Signal Section Specification, No. 181. It is recommended for painting braid-covered cables, wood battery racks, etc.

Furnished in one pint, one gallon and five-gallon containers, also 55-gallon, one-time shipping drums.

Ref. No.	Description	Piece No.
A	Victolac No. 11 Universal Black Insulating Paint in one-pint can	11P
B	Victolac No. 11 Universal Black Insulating Paint in one-gallon can	11G
C	Victolac No. 11 Universal Black Insulating Paint in five-gallon can	11G5
D	Victolac No. 11 Universal Black Insulating Paint in 55-gallon one-time shipping drum	11G55
E	Victolac No. 12Q Universal Black Cable Paint in one-gallon can	12G
F	Victolac No. 12Q Universal Black Cable Paint in five-gallon can	12G5
G	Victolac No. 12Q Universal Black Cable Paint in 55-gallon one-time shipping drum	12G55

Victolac Parkway Cable Sealing Compound

FUSIBLE ASPHALTIC BASE TYPE

Ref. A

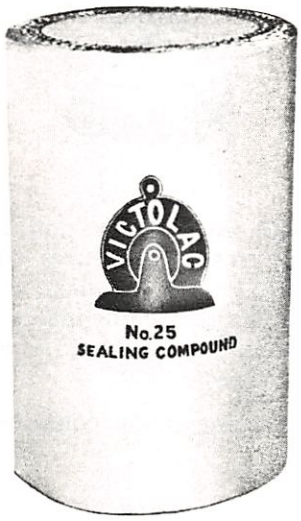

Ref. B

Ref. C

Victolac No. 25 is a high grade insulating material which is unequalled for application to parkway cable bootlegs, junction boxes, and trunking where sealing is desirable to prevent corrosion and deterioration. It will not absorb moisture, is dense and very adhesive, sets with practically no shrinkage, is pliable at all times (even in coldest weather), is free from all chemical impurities, and is acid-proof. It meets A.A.R., Signal Section, Specification No. 184.

Victolac No. 25 is especially suitable for use where there is a wide fluctuation in prevailing temperatures, as it has a remarkably constant volume notwithstanding temperature changes. For voltages up to 6,000. Melting point 180° F. Furnished only in 25-lb. cakes or 100-lb. cylindrical cartons.

Victolac No. 78: an especially high grade compound for voltages up to 22,000. Dielectric strength 940 volts per mil. Melting point 169°F. Furnished in one-gallon containers.

Ref. No.	Description	Piece No.
A	Victolac No. 25 in twenty-five lb. cake	25-25
B	Victolac No. 25 in 100-lb. carton	25-100
C	Victolac No. 78 in one-gallon can	78-1

Cold Application Sealing Compounds

A.A.R., SIGNAL SECTION SPECIFICATION NO. 188

Ref. A

No. WL640 cold application sealing compound is for closing entrances to mechanism cases, switch circuit controllers, relay housings and cable outlets to exclude insects, vermin and rodents. It can be applied and removed at ordinary temperatures.

Available in one-gallon containers packed 4 to a carton.

SIGNAL CEMENT

Ref. B

A plastic cement for sealing lenses in place, wire entrances in relay cases, bootlegs, cable junction boxes, cabinets, etc. It is elastic, adhesive, and will not run in heat. It retains these qualities for years, permitting removal of wires and the running of new wires without replacing the wire entrance seal. Furnished in gray or black. The ingredients are not toxic to the skin, yet they repel rodents.

Available in one gallon containers, packed four to the case. Supplied in gray or black.

Ref. No.	Description	Piece No.
A	Cold working sealing compound, one-gallon container	WL640
B	Signal Cement, one-gallon container, gray	7202
B1	Same as Ref. B, but black	7209

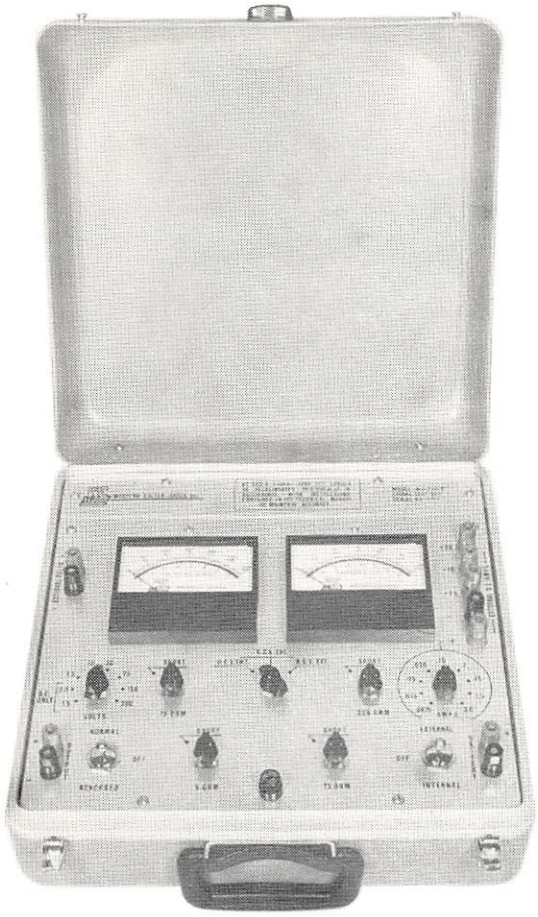

202-E SIGNAL TEST SET

MAKE ACCURATE FIELD OR SHOP TESTS QUICKLY, EASILY

- Help determine pick up, release, contact resistance, D.C. or A.C. voltages and D.C. currents.
- With internal batteries make simultaneous voltage and current readings on D.C. signal apparatus with only two leads connected to the device under test.
- Torque tests on semaphore signals can be made using external battery.
- Check motor current consumption and the operating characteristics of hold clear device on crossing gate mechanisms.
- Check switch machine overload relay.

GENERAL INFORMATION

Satisfy the requirements of the Signal Inspection Act with this laboratory-quality, portable test set. Determine characteristics of signal apparatus in the field or signal shop, quickly and easily.

With the W-C-H Model 202-E Test Set, polarity changes and voltage variations are accomplished by switches, fixed resistances and rheostats conveniently located on the panel. Unit has self-contained battery and input terminals for external battery use.

The rugged, lighweight Model 202-E Test Set features a fiberglass case. It is shipped complete with one pair of test leads and 8 "D" cell batteries.

WESTERN-CULLEN-HAYES, Inc.
2700 West 36th Place • Chicago, Illinois 60632

202-E
SIGNAL TEST SET

SPECIFICATIONS

Sensitivity	AC Voltmeter:	±3% of full scale @ 60 hz.
	DC Voltmeter:	±1% of full scale.
	DC Ammeter:	
	.0075A to 7.5A:	±1% of full scale.
	15A:	±1.5% of full scale.
	30A:	±3% of full scale.
Ranges	AC Voltmeter:	2.5, 15, 30, 75, 150, 300 Volts
	DC Voltmeter:	1.5, 3.0, 2.5, 15, 30, 75, 150, 300 Volts
	DC Ammeter:	.0075, .015, .03, .075, .15, .3, .75, 1.5, 3.0, 7.5 15.0, 30.0 Amps.
Resistance Assembly		450 Ohms total One 5 ohm, two 75 ohm and one 225 ohm potentiometers.
Fuse		6 Amp in external battery circuit only. Electrical requirements of a measuring device as sensitive as the Model 202-E Test Set preclude use of a fuse in the Internal Battery and External Volt and Current Function Circuits.
Temperature	Operating:	0° F to +100° F
	Storage:	−40° F to +140° F.

ORDERING REFERENCES

202-E TEST SET (Complete with manual, test leads, and "D" cell batteries)

REPLACEMENT TEST LEADS:

39-0117-13 (Red)
39-0117-14 (Black)
39-0117-18 (One Red/One Black)

WESTERN-CULLEN-HAYES, Inc.
2700 West 36th Place • Chicago, Illinois 60632

NEW!... the first "all-in-one" signal tester for RAILROADS

Simpson's TS-111 multi-tester

- MEASURE PERCENT "ON" TIME OF CODED TRACK PULSES—with readout directly in percentage.
- MEASURE AC VOLTAGES—even when AC is superimposed on DC track signals.
- MEASURE RESISTANCE—without fear of meter burnout. Special circuit warns operator if power is present.
- MEASURE PEAK CURRENTS—with no pointer oscillation, no guesswork. Built-in pointer stop is adjustable from the front panel.
- MEASURE AC-DC CURRENT, AC-DC VOLTAGE, AND RESISTANCE—all with one rugged instrument.

Today's train control and warning systems require a wide variety of electrical tests—all of which can now be made with one instrument: the Simpson TS-111. It makes accurate tests of circuits used for train control, remote interlocking, grade crossing protection, auto-block signals, and centralized traffic control. Designed specifically for railroads, the TS-111 has been proven in use by major U.S. and Canadian roads. Its shock-resistant movement is varistor protected from overloads, and a replaceable fuse protects the input circuits. To take rough railroad use, it comes in a permanently attached leather case. For ohms measurements a unique circuit warns when voltage is present—if no voltage is indicated, the "push for ohms" button can then be pressed without the danger of tester burnout. The versatile TS-111 is the economical and logical choice for signal and communications maintainers.

See complete list of ranges and specifications on reverse.

Simpson® model TS-111

THE ONE MULTI-TESTER DESIGNED SPECIFICALLY FOR RAILROADS . . .

- BUILT-IN CURRENT TRANSFORMER for low insertion loss AC current measurements.
- MEASURES AC VOLTAGE COMPONENT of combined AC-DC signals.
- LARGE RECESSED KNOB for positive action, even when wearing gloves.
- ADJUSTABLE POINTER STOP makes peak readings of pulsating current or voltage easy and accurate.
- MIRROR SCALE AND KNIFE-EDGE POINTER eliminates viewing angle errors—improves reading accuracy.
- MEASURES PERCENT "ON" TIME at any rate in excess of 30 pulses per minute.

SPECIFICATIONS

RANGES

DC Voltage: 0-0.6, 3, 15, 60, 300 volts (at 1000 Ω/v sensitivity).
AC Voltage: 0-3, 15, 150, 600 volts (at 300 Ω/v sensitivity).
DC Current: 0-15, 60, 300 milliamperes; 0-1.5, 6, 30 amperes.
AC current: 0-3, 30 amperes.
Resistance: 0-100 (5 at center scale), 0-10,000 (500 at center scale) Ohms.
Percent "On" Time: 0-100% (for pulses over 30 per minute).

ACCURACY

DC Ranges: ±2% of full scale. (0-3 DC volt range: ±1% of full scale).

AC Ranges: ±3% of full scale. (Sine wave, including AC voltages up to 100 volts which are superimposed on up to a 20% DC signal).

Resistance Ranges: Within ±5% of reading at center scale. (Within ±10% of reading at extreme low and high portions of the scale).

Percent "On" Range: ±2% of full scale for 10-60% (at 30 pulse rate). ±2% of full scale for 10-100% (at 180 pulse rate).

INSERTION LOSS

DC Ranges: 60 millivolt drop (maximum).

AC Ranges: 90 millivolt drop (maximum) on 0-3 Amp range. 135 millivolt drop (maximum) on 0-30 Amp range. (At 60 Hz. sine wave).

MOVEMENT

Self-Shielding Core Magnet. Spring-backed jewels provide protection from shock and vibration. Varistor directly across the meter movement limits the current to a safe level, protecting the movement from overloads.

SCALE

The readout scale is 4¼" long, marked with clear black and red printing. Knife-edge pointer and mirror scale prevent parallax errors.

BATTERY

Eveready type #950 or equivalent (standard "D" size cell) used for Ohms measurements. 1.5 volts at 300 mA (maximum).

SIZE

5¾ x 7½ x 4½" (with case).

WEIGHT

3¾ lbs. (with case).

TS-111 complete with battery, 5-ft. test leads, leather carrying case, and operator's manual.

WESTERN-CULLEN DIVISION
Federal Signal Corporation
2700 WEST 36TH PLACE, CHICAGO, ILLINOIS 60632 (312) 254-9600

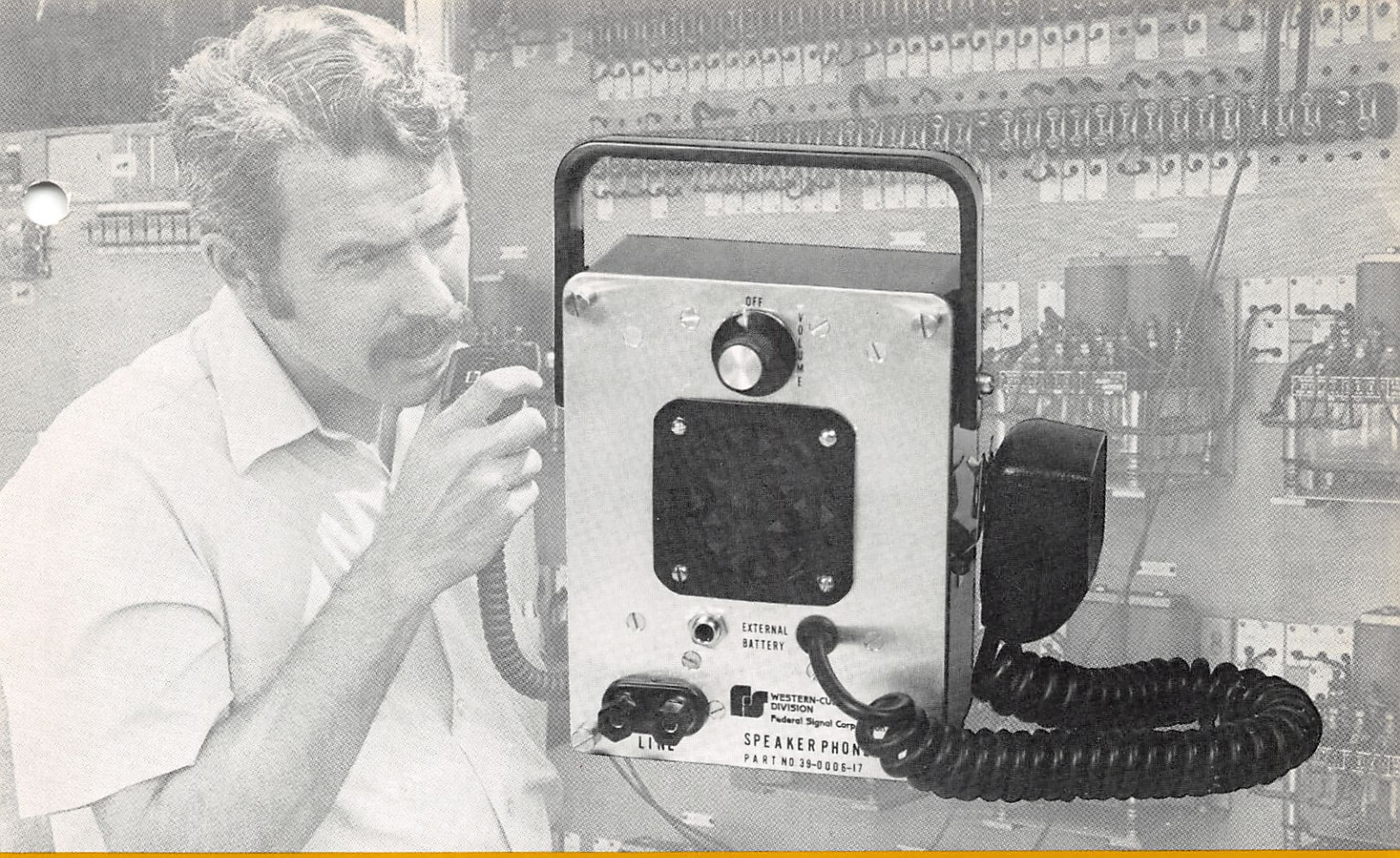

Quality and versatility.
Yours in the Western-Cullen

Signalman's Portable Speakerphone

Automatic gain control

Won't shunt DC Code or Carrier Signals

Compatible with other makes, models

Exceptional battery life

Variable output

Uses readily available, inexpensive standard "D" cell batteries

WESTERN-CULLEN DIVISION
Federal Signal Corporation

More performance. More precision. Western-Cullen speakerphones have it.

The perfect communications tool for your maintenance needs.

Western-Cullen Signalman's Speakerphone is perfect for just about any job where communication between two points is necessary—aligning and installing new signals, checking out hotbox remote readout systems or any other time maintenance crews need to communicate.

Unique automatic gain control feature compensates, automatically, for varying input levels. Without adjusting any knobs, a unit 25 miles away sounds just as loud as one two miles away.

Exclusive "press-to-talk" switch on the microphone is used to switch between transmit and receive. Long, coiled microphone cord (available in 5 or 10 ft. lengths) makes remote operation easy. Can be clipped to work clothes for almost "hands off" operation.

And the Western-Cullen Speakerphone is completely compatible with other communications equipment like our Unifone. So there is no need to replace all existing units at once. Lightweight, portable, the W-C Signalman's Speakerphone uses four standard 1½V "D" cell batteries; inexpensive and available almost anywhere. Low power use assures long battery life (about 200 hours). Jack on the front panel allows the use of external power.

Inside the W-C Speakerphone

Overall dimensions are approximately 8⅝" x 7¾"x 3½", including handle and mounted microphone. Communicates over open-wire lines, code line, cable pair or with line-to-ground hook up, and includes a series DC blocking capacitor. Five integrated circuits, and 3 transistors insure top performance. The automatic gain control circuit holds the audio output relatively constant (within 3 db) for a change of more than 20 db in input level, which corresponds to approximately 100 miles of open-wire line.

A squelch circuit automatically quiets the receiver when the input signal is below -25 dbm. Normal operation resumes when the input signal exceeds -25 dbm.

Specifications

Ambient Temperature	+32° to +160°F (0° to 71°C)
Frequency Response	±3 db between 650 Hz and 1.8 Khz
Low Frequency Roll-off	19 db/octave (200 Hz to 100 Hz)
High Frequency Roll-off	24.5 db/octave (4KHz to 8KHz)
Line Output Level	Approximately 300 mV RMS at normal talking
Line Input Level	20 to 300 mV RMS
Output Power	Approximately 250 mW into speaker
Power Supply	6V DC (four "D" size 1½-volt batteries) or external power +12 to +16 VDC nominal
Current Drain	(receiving—no signal—two-thirds volume) 15 mA; (receiving—1 KHz signal—one-half volume) 50 mA; (transmitting) 50mA; (average) 30 mA
Overall Dimensions	8⅝" x 7¾" x 3½" including handle and microphone in clip
Signal Input Leads	Two 10'-long, super-flexible leads are supplied with spade lugs on one end and insulated clips on the other
Weight	Approx. 5 lbs. w/line leads including optional external line leads ½ lb.

How to order

Speakerphone with 5 ft. Mike cord, Includes 4 "D" Size 1½ volt batteries, 2/10 ft. long line leads.	39-0006-17
Speakerphone same as above with 10 ft. Mike Cord	39-0006-17A
Optional — External power line leads 10 ft. long.	

WESTERN-CULLEN DIVISION
Federal Signal Corporation
2700 West 36th Place, Chicago, Illinois 60632

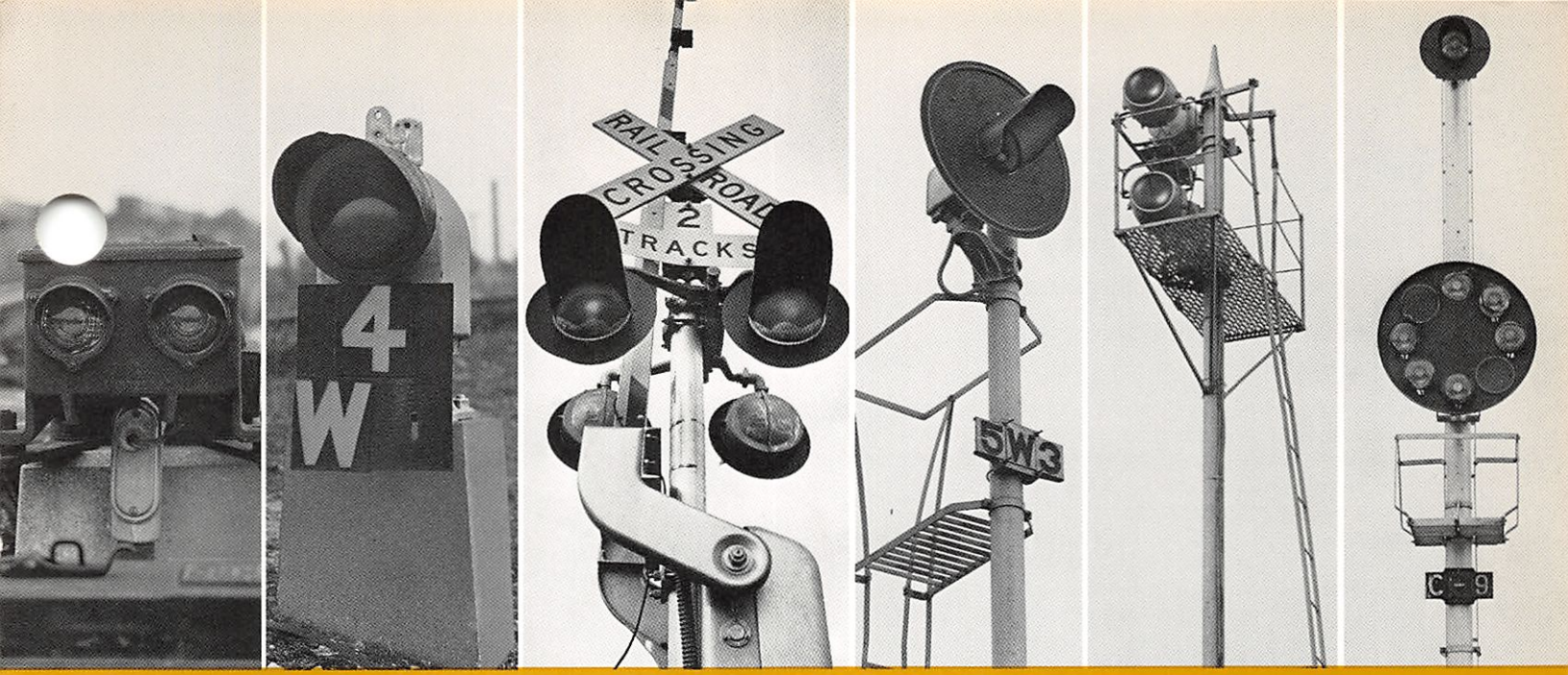

Solid State Flashing Relays for Highway Crossing and Train Control Signal Applications

WESTERN-CULLEN DIVISION
Federal Signal Corporation

Model 720 EOR Solid State Flashing Relay

Economical, dependable control of flashing lights

This factory-tested, completely solid state, self-regulating relay costs less than electromechanical units but is designed to give maximum performance under all conditions. No moving parts to break down.

All-silicon semiconductors, built-in circuit protection, durable aluminum housing and highest quality construction assure long, maintenance-free operation.

Model 720 exceeds AAR requirements and is compatible with all lighting circuits—AC, rectified AC or DC. Can flash two lamp loads of 20 amperes each alternately...flashing rate adjustable from 35 to 55 flashes per minute.

This rugged unit can be synchronized with two or more other units for higher loads. Uses no power in quiescent state. Installs quickly and easily. Comes complete with standard AAR 14/24 terminal binding posts.

Operation

High Stability Oscillator timing circuit drives a Multivibrator for precise "on" and "off" flashing ratio without external components or adjustments.

Four high-current silicon power transistors flash lamps in alternate shunting mode. Adjustable from 35 to 55 flashes per minute by external, lockable screw.

Model 720 can switch a lamp load of 0 to 20 amperes at 10 ampere/leg. When lamp loads exceed 20 amperes, multiple 720 EOR flashers can be synchronized. Each additional unit increases capacity 20 amperes. Flashing rate adjustments need be made on master only.

Internal short circuit protector insures against dark crossing signal caused by possible shorts across lamp load or power source. Internal rectifier is also protected. Circuit check de-energizes POR in the event of AC rectifier component failure.

Installation

Model 720 EOR may be installed in any position (but preferably with the heat sink fins vertical) by using the four outboard holes in the baseplate.

Flasher may be operated on AC, rectified AC, DC or combination AC, DC circuited through a PTR or POR relay.

Lamps can be easily aligned by removing jumper between terminals S1 and S2 which will cause one lamp leg to light continuously. A quick replace and removal will light the opposite leg continuously.

Adjust flashing to desired rate with lockable external screw. Clockwise increases rate, counter-clockwise decreases rate.

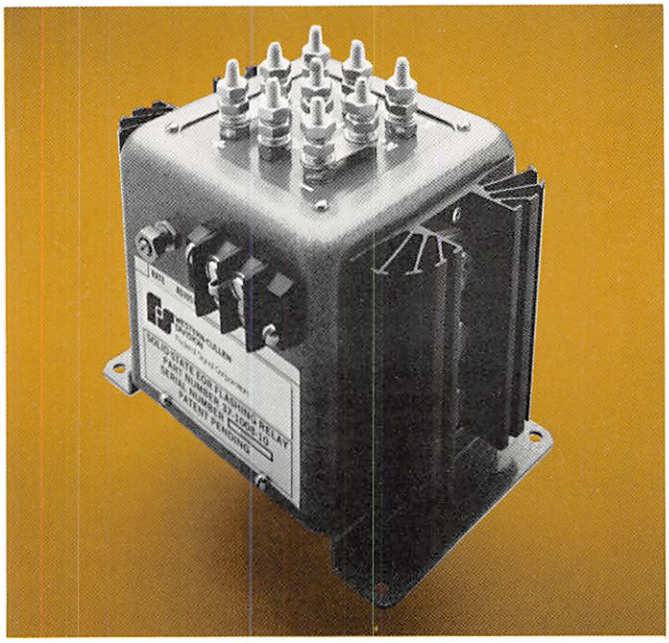

Specifications and Ordering Information

Ambient Temperature	−40° to +160° (−40° to +71° C) at full capacity.
Control Voltage	8 to 16 V., AC, rectified AC or DC
Control Current	.7 amp at 12V (during operation only)
Lamp Voltage	8 to 16V, AC, rectified AC or DC
Lamp Current	Two loads, 0 to 20 amp total each, alternate flashing at 50% duty cycle
Short Circuit Protection	Four independent fuses. Any or all may open without causing a dark signal
Flashing Mode	Alternate shunting
Flash Rate	Adjustable, 35 to 55 per minute
Duty Cycle	50% on 50% off self-regulating
Dimensions	6½"x7¼"x6⅞"—including terminals and mounting flange
Mounting	Four mounting holes (.234" dia.)
Terminals	Standard AAR 14/24 with hardware
Ordering Reference	37-1008-10

Model 705 Wayside Signal Flasher

Low-cost flasher for permissive aspects

The aluminum-housed Model 705 Wayside Signal Flasher is the better alternative to electromechanical flashing relays for use in permissive signal aspect circuits.

All solid state construction using the latest technology assures top performance throughout a lifetime of demanding use.

Controls one or two 18 or 25 watt, 10 volt signal lamps for a total load current of up to five amperes DC (or full wave rectified AC) at up to 16 volts.

Can even handle AC energized lamps if used in conjunction with the separate Model 1610 Rectifier.

Laboratory tested under the most severe conditions to insure consistent, dependable, economical operation. Temperature range is from −40°F to +160°F. Unit is protected against lightning and transient surges.

Operation

The Model 705 Wayside Signal Flasher has two terminal pairs that correspond to coil and contact terminals on electromechanical relays.

Load terminals are connected in a series with one lead of the signal(s) and pass load current of 0 to 5 amperes continuously with less than 1 volt drop when the control terminals are de-energized.

The circuit through the load terminals alternately opens and closes at 55 flashes per minute (at a duty cycle of 50%) when the control terminals are energized from a 10 to 14 volt source.

Installation

Since control and load terminals are isolated, the Model 705 Wayside Signal Flasher can be directly connected just like a flasher relay (but observing polarity).

The unit can be mounted in any position, preferably with heat fins vertical, by using the four mounting holes provided on the base.

Where lamps are energized from an AC source, a separate full-wave bridge rectifier—Western-Cullen Model 1610—is necessary for connection between signal lighting transformer secondary and the signal logic circuit to the lamps. See back cover for details.

Specifications and Ordering Information

Ambient Temperature	−40° to +160°F (−40° to +71°C)
Control Input Voltage	(Steady) 0 to 2.5 V DC (Flashing) 10 to 14 V DC
Control Input Current	20 to 100 mA DC (at 10 to 14 V DC)
Flashing Rate	55 flashes per minute±5%
Flashing Duty Cycle	45 to 55%
Load ON Current	5 A DC maximum
Load ON Voltage Drop	1 V DC maximum
Load OFF Voltage	16 V DC maximum
Dimensions	5¼"x5"x4¼"
Mounting	Four mounting holes (¼" diam.) on 2 15/16"x4¾" centers for mounting to signal case backboard (preferred with fins vertical) or signal case shelf
Terminals	Standard AAR 14/24 with hardware
Ordering Reference	37-1008-34

Model 1610 Rectifier

An inexpensive way to rectify your lighting circuits

If you need to convert AC to DC for your signal lights, our versatile Model 1610 Rectifier was built for you.

Inexpensive to buy and economical to operate, Model 1610 has been precision engineered to provide years of maintenance-free service.

All solid state design. Cast aluminum housing. Factory tested at −40° to +160°F. Field proven under all conditions.

Operation

Model 1610 provides full-wave rectified power for the load circuit of the Model 705 Wayside Signal Flasher where an AC source supplies power to the signal lamp(s).

Also can be used in any situation where a full-wave bridge rectifier is needed to supply up to 13 volts and up to 10 amperes DC from an AC source up to 16 volts RMS.

Protected against power line transients—including lightning—expected from the secondary of a signal transformer.

Installation

The compact Model 1610 can be quickly installed. Four mounting holes in the base allow the unit to be mounted in any configuration, but preferably with the heat sink fins vertical.

Utilizes standard AAR 14/24 terminals and comes complete with hardware. Simply mount, connect the terminals and go. The Model 1610 Rectifier is then ready for years of dependable service.

Specifications and Ordering Information

Ambient Temperature	−40° to +160°F (−40° to +71°C)
Input Voltage	16 V RMS maximum
Input Current	11.1 A RMS (nominal at 10 A DC output)
Input Fuse	15 amperes, standard blow, 3 AG or equal
Output Voltage	13 V DC (approx. at 16 V RMS input)
Output Current	10 A DC maximum
Dimensions	5¼"x5"x4¼"
Mounting	Four mounting holes (¼" dia.) on 2 15/16"x 4¾" centers for mounting to signal case backboard (preferred with fins vertical) or signal case shelf
Terminals	Standard AAR 14/24 with hardware
Ordering Reference	37-1008-40

WESTERN-CULLEN DIVISION
Federal Signal Corporation
2700 West 36th Place, Chicago, Illinois 60632

LIGHTNING ARRESTERS

CONTENTS

	Page No.
Rare-Gas	20-2 to 20-6
Air-Gap	20-21 to 20-25
Pole Line Lightning Arresters	20-30 & 20-31
Coil Shunts	20-36
Gas Cartridge	—

WC Hayes
WESTERN-CULLEN-HAYES, Inc.
2700 West 36th Place • Chicago, Illinois 60632 • Telephone: 312/254-9600 • Telex 25-3206

Rare-Gas Arresters

Rare-gas arresters provide the maximum protection available for signal and communication circuits, against both lightning strikes and also induced voltage overloads. The types described in the following pages are available to meet all applications that arise in everyday use. Many have, in addition to the rare-gas cartridges, spark gaps and fuses where these are required.

PHYSICAL CHARACTERISTICS

The following paragraphs list the performance features of a typical rare-gas cartridge, when tested in accordance with A.A.R., Signal Section, Specification 52:

1—In tests from a 2000 mF discharge bank the cartridge can safely carry 4000 amp. surges at 20-second spacing. See Fig. 1.

2—The discharge and return to normal after a stroke, is very rapid. Fig. 2 shows a 4.2 Kilovolt stroke; the peak discharge current is 680 amps.

3—The cartridge meets the AAR 10/20 test, that is, a wave front rising at the rate of 10 KV/microsecond to a 20 KV crest can be carried.

4—Continuous current capacity is 2 amps.

5—The metal electrodes help maintain the unit's constant characteristics under repeated strokes. Fig. 3 shows the unit passing repeated rapid strokes. Fig. 4 shows a carbon electrode type under identical conditions. It is rapidly approaching the destruction point.

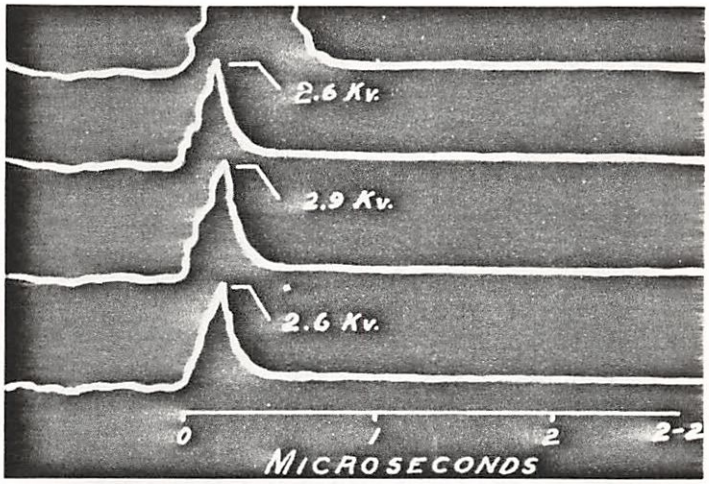

Figure No. 1

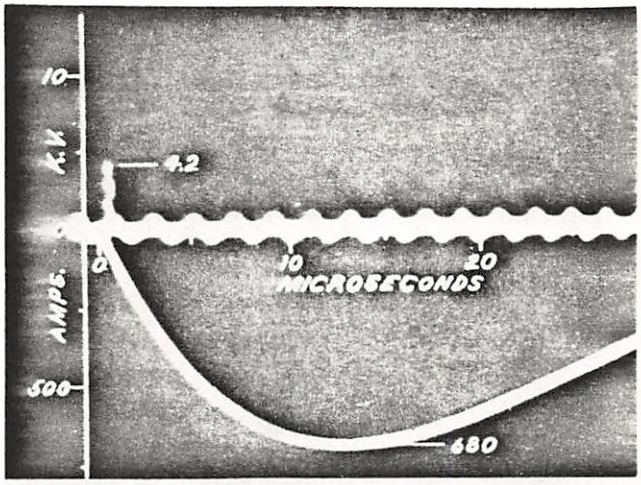

Figure No. 2

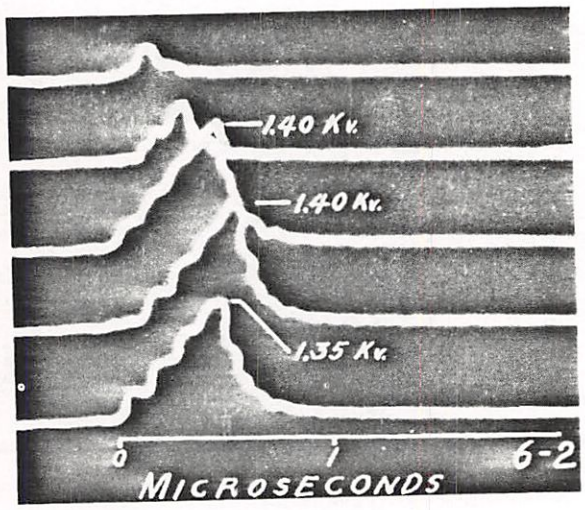

Figure No. 3

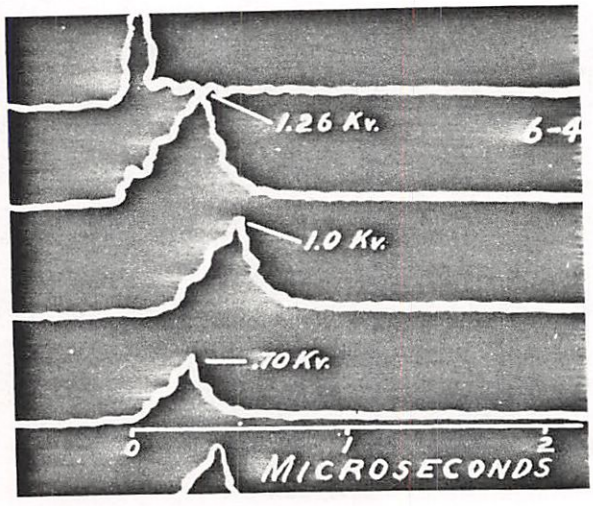

Figure No. 4

Types 27-A and 27-AHD Lightning Arresters

5⅛" long, 1¼" wide, 2¼" high

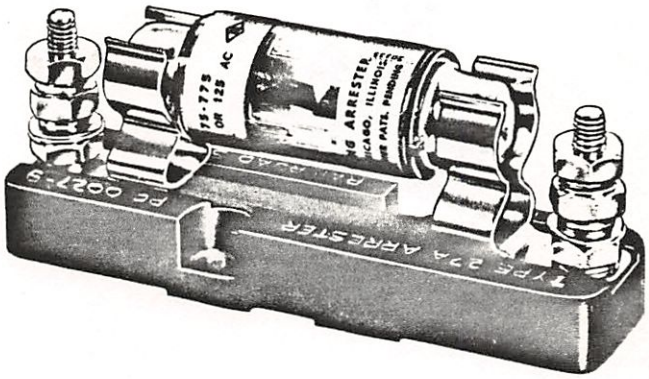

The base of this arrester is molded bakelite and carries two binding posts, one for line and instrument, and one for ground.

Type 27-A arrester is for use on signal circuits of 30 volts D.C. or 125 volts A.C. maximum and on communication circuits up to 450 volts D.C.

Breakdown ranges: 200-400 volts and 475-775 volts at 60 cycles.

Type 27-AHD arrester is equipped with a heavy-duty rare-gas cartridge and is for use on signal circuits of 30 volts D.C. or 125 volts A.C. maximum, and on communication circuits up to 450 volts D.C.

Breakdown range: 475-775 volts at 60 cycles.

Ground hook plates and wood screws are furnished with each arrester.

Ref. No.	Description	Piece No.
A	Type 27-A Arrester complete with rare-gas cartridge, 200-400 V.B.D.	0027-A-1Y
A1	Same as Ref. A but 475-775 V.B.D.	0027-A-1G
A2	Same as Ref. A less cartridge	0027-10
B	Type 27-AHD Arrester complete with rare-gas cartridge 475-775 V.B.D.	0027-AHD
	REPLACEMENT PARTS	
1	Cartridge Clip	0027-8A
2	Base (Bakelite)	0027-9
3	Rare-gas cartridge only, breakdown range 200-400 volts	0027-1Y
3A	Same as Ref. 3 but 475-775 volts	0027-1G
4	Heavy-duty rare-gas cartridge only, breakdown range 475-775 volts	0027-1GHD
5	Ground Hook Plate	0027-15

Types 275 and 275-TC Lightning Arresters

3⅜" long, 1" wide, 4³⁄₁₆" high

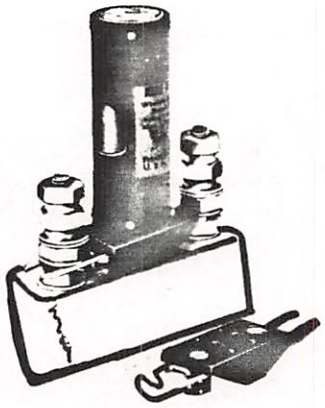

These types of rare-gas arresters are arranged for mounting on A.A.R. porcelain terminals and may therefore be banked on 1" centers. The mounting unit is so designed that it may be mounted on one terminal, as illustrated, or on the diagonally opposite binding posts of two terminals mounted side by side on 1" centers.

The cartridge plugs into the mounting unit, thus permitting easy removal for inspection or test or when high voltage megger line tests are being made.

The Type 275 arrester has break-down range of 200-400 or 475-775 volts at 60 cycles and is intended for use on signal circuits of 30 volts D.C. or 125 volts A.C. maximum, and on communication circuits up to 450 volts D.C.

The Type 275-TC is a special, low break-down, arrester intended for the protection of low voltage lamp filaments. It should be mounted in the lamp housing and connected in multiple with the lamp to be protected. Recommended for the protection of lamps up to 13.5 volts.

The A.A.R. porcelain terminal is furnished with references A and B unless otherwise specified. Wood screws for mounting and a ground hook plate are furnished with each complete arrester. Breakdown range 60-90 volts at 60 cycles.

Ref. No.		Piece No.
A	Type 275 Arrester complete with rare-gas cartridge, 200-400 V.B.D.	0275-1
A1	Same as Ref. A but 475-775 V.B.D.	0275-2
A2	Same as Ref. A, less terminal block	0275-3
A3	Same as Ref. A1, less terminal block	0275-4
B	Type 275-TC Arrester complete with rare-gas cartridge, 60 to 90 V.B.D.	0275-30
B1	Same as Ref. B less terminal block	0275-31
	REPLACEMENT PARTS	
1	Cartridge for Ref. A, 200-400 V.B.D.	0275-6
1A	Cartridge for Ref. A1, 475-775 V.B.D.	0275-7
1B	Cartridge for Ref. B, 60 to 90 V.B.D.	0275-27
2	Mounting contact strip	0275-39
3	A.A.R. Terminal Block	1056-14A
4	Ground Hook Plate	0035-6

Type 345 Lightning Arrester

6" Long x 1¼" Wide x 2⅛" High

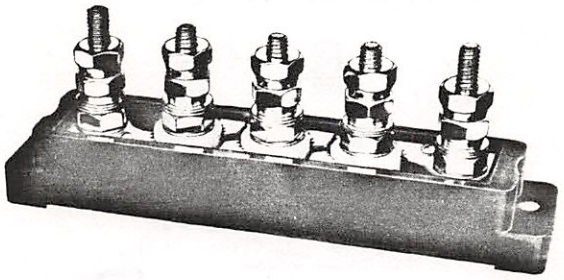

The Type No. 345 Lightning Arrester incorporates the latest improvements in the line to rail and line to earth grounding type of arrester. It is sturdily built of molded bakelite with studs molded in position, insuring proper air gaps for the life of the arrester. It accommodates two line circuits and provides a means of discharging to both rails and ground. Due to its construction, circuit wires do not cross ground wires, and since there are three distinct paths to ground for each circuit, the danger of foreign substances shorting the gaps is minimized. The height of the 345 is considerably less than any other arrester of this type. All sparking points are copper to silicate of carbide.

Two wood screws for mounting and 3 ground hook plates furnished with each arrester.

This arrester may be furnished as a non-air-gap type if specified.

Ref. No.	Description	Piece No.
A	Type 345 Lightning Arrester complete	0345-1
	REPLACEMENT PARTS	
1	Base (with binding post inserts)	0345-11
2	Spark Plate	0345-13
3	Ground Hook Plate	0027-15
4	Silicate of Carbide Disc	1021

Type 105-B Lightning Arrester

3⅞" long, 1" wide, 2⅞" high

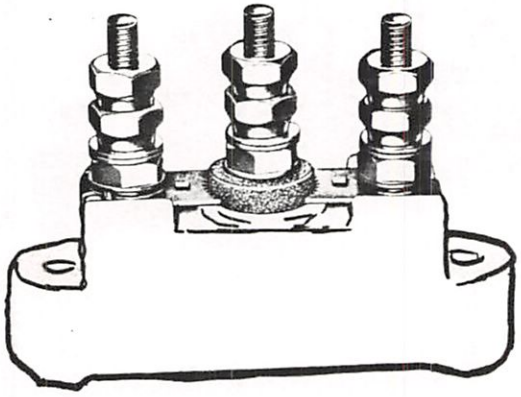

This arrester has already become one of the most popular of Railroad Signal types. In a very small space it combines all of the proven desirable protective mediums — silicate of carbide disc with choke coil of No. 14 wire.

The terminals of the choke coil are brought to the surface and are visible for inspection. All parts are made of heavy metal and are carefully adjusted—insuring real protection to your signal apparatus.

We call particular attention to the very small size of the base, being 3⅞" long by 1" wide, which makes it very adaptable to locations where available space for lightning protective apparatus is limited.

Wood screws and ground hook plate are furnished with each arrester.

Ref. No.	Description	Piece No.
A	Type 105B Lightning Arrester complete, air-gap type, with silicate of carbide disc	0105-B
	REPLACEMENT PARTS	
1	Silicate of carbide disc	1021
2	Spark gap plates	0105-3
3	Ground Hook Plate	0035-6

Type 110 Duplex Track Arrester

NON-AIR GAP

3⅞" long, 1" wide, 2⅞" high

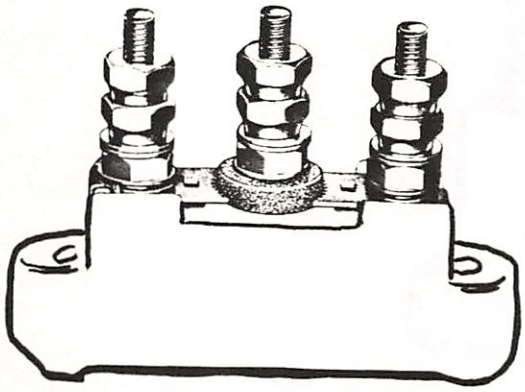

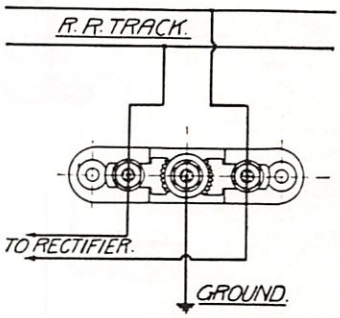

Type 110 Arrester consists of a porcelain base on the top of which is mounted a silicate of carbide disc. On both sides of this disc are placed brass plates which make connection with two outside binding posts forming a non-air gap protective medium between the binding posts and the silicate of carbide disc; this disc is positioned by the ground binding post. The two outer binding posts are intended to be connected directly to the track as shown in diagram. This arrangement forms an economical and efficient medium of lightning protection having advantages of the regular lightning path to ground as well as the shunt feature combined. No choke coils are used in this combination.

Two No. 8 x 1¼" Round Head Blued wood screws and one ground hook plate are furnished with each arrester.

Ref. No.	Description	Piece No.
A	Type 110 Duplex Track Arrester complete	0110
	REPLACEMENT PARTS	
1	Silicate of carbide disc	0105-7
2	Spark gap plate	0105-3
3	A.A.R. binding post complete with nuts and washers	107010
4	Porcelain base only	0105-1
5	Ground hook plate	0035-6

Type 6 Quenched Gap Lightning Arrester

4⅛" long, 3¼" high, 1¼" wide

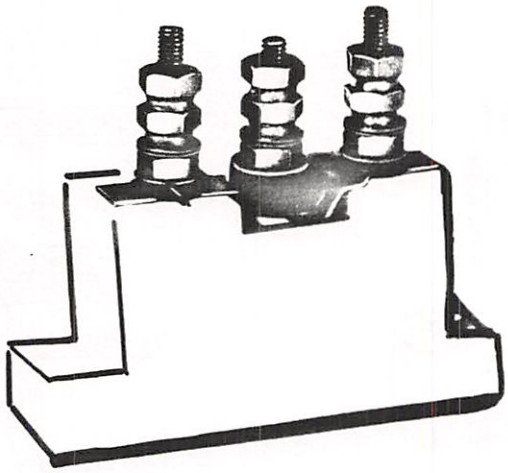

The carbon or silicate of carbide discs used are ¼" thick by ¾" in diameter and are of a special mechanical strength to eliminate the possibility of disintegration.

On the inside of the porcelain base are two recesses each containing a helical reactance coil. The upper end of each of these coils is connected to the post which holds the copper plates in place, while the lower end of the coils are connected together, thus placing the two coils in series. The design is such that there is a heavy wall of porcelain between each reactance coil and the center post, thus there is absolutely no danger of a spark occurring on the inside of the block.

After the reactance coils have been placed in position, the whole inner part of the block is completely filled with insulating compound.

Type 6 arrester is constructed upon a heavy porcelain containing block and is equipped with standard A.A.R. binding posts, nuts and washers. A copper strip for connecting ground posts, and wood screws for mounting are furnished.

Ref. No.	Description	Piece No.
A	Type 6 Lightning Arrester, Quenched Gap, with carbon disc	0006-3EN
A1	Same as Ref. A but with silicate of carbide disc	0006-4EN
	REPLACEMENT PARTS	
1	Carbon disc	1086-1
2	Silicate of carbide disc	1021
3	Porcelain base	1069
4	Spark plate	1084-N
5	Bakelite quench gap washer	1012-18
6	Ground connection plate	1012-14

Type 3 Lightning Arrester

1⅛" wide, 5⅞" long, 3⅜" high

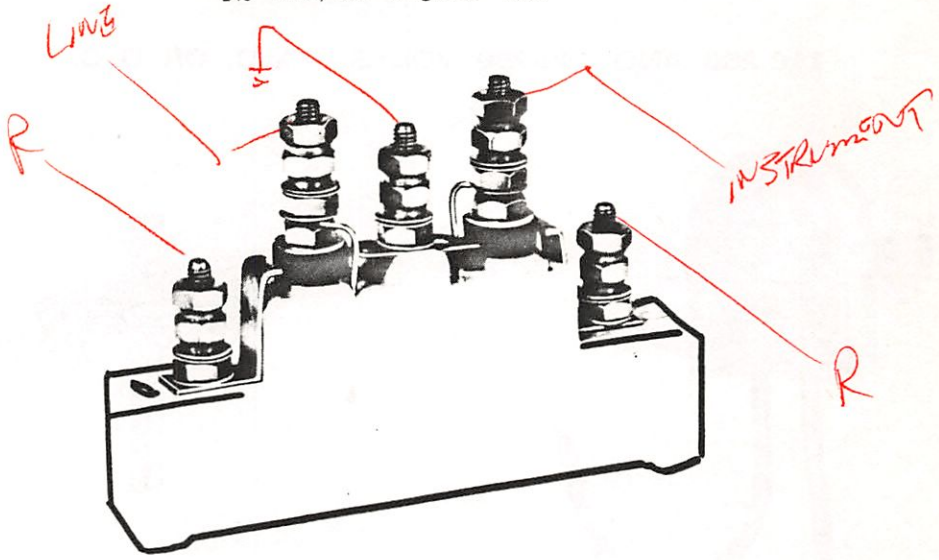

The rail grounding feature is incorporated in the Type 3 arrester in addition to the regular choke coil and spark gap construction of the Type 6.

All posts are rigidly mounted in a porcelain base in such a manner that they are in a straight line, allowing the arrester to be made very narrow.

This arrester has five binding posts, as follows: Two for rail connections, one for man made ground connection, one for line connection and one for instrument connection. All sparking points are copper to silicate of carbide.

Type 3 Lightning Arresters are designed to protect low voltage circuits. The Type 3HB Lightning Arrester, having silicate of carbide discs on all five binding posts, is designed to protect 110 volt A.C. circuits. The silicate of carbide discs on the ground binding posts increase the resistance between line and ground, without impeding the free passage of lightning surges, and prevent the line current from following through when lightning or static discharges have established a path to ground.

Three copper ground connection plates and two wood screws are supplied with each arrester.

Ref. No.	Description	Piece No.
A	Type 3 Lightning Arrester, not filled with sealing compound	0003-2
A1	Same as Ref. A but with base filled with sealing compound	0003-2F
B	Type 3HB Lightning Arrester, for 110 volt A.C. circuits, not filled with sealing compound	0003-6
B1	Same as Ref. B but with base filled with sealing compound	0003-6F
	REPLACEMENT PARTS	
1	Silicate of carbide disc	1021
2	Porcelain base	1041
3	Center spark plate	1012-22
4	End spark plate	1012-12
5	Bakelite Quench-gap washer	1012-18
6	Lead cushion washer	0003-19
7	Ground connection plate	1012-13

Type R2003 Lightning Arrester

110-250 AND 440-750 VOLTS — A. C. OR D. C.

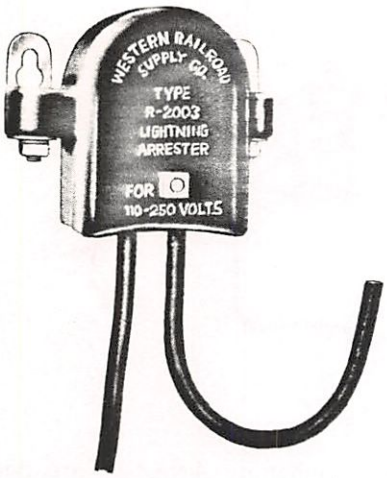

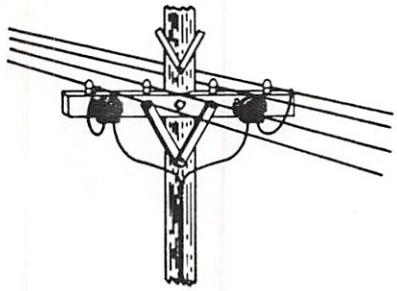

This arrester is extremely efficient owing to the fact that it will operate on a very close margin above the normal line voltage. It is of the valve type and provided with large surfaces over which repeated discharges may pass without affecting the operating characteristics of the arrester. This arrester may be used either as a protection between the line and ground or as a shunt across transformer or instrument terminals. Each arrester is tested in our laboratory before shipping to insure its functioning at the proper voltage. Provisions are made so this arrester may be connected on the cross-arm or pole proper without the danger of cracking the housing.

This arrester is made with dependability as the ultimate object. Notwithstanding the extremely high value of this product, the cost of the arrester is low and its installation will be found inexpensive compared with the results obtained.

Ref. No.	Description	Piece No.
A	Type R-2003 Lightning Arrester complete for 110-250 volt line (36" leads).....	2003-32
A1	Same as Ref. A but for 440-750 volt line.....	2003-36

Type R2030 Lightning Arrester

110-250 AND 440-750 VOLTS — A. C. OR D. C.

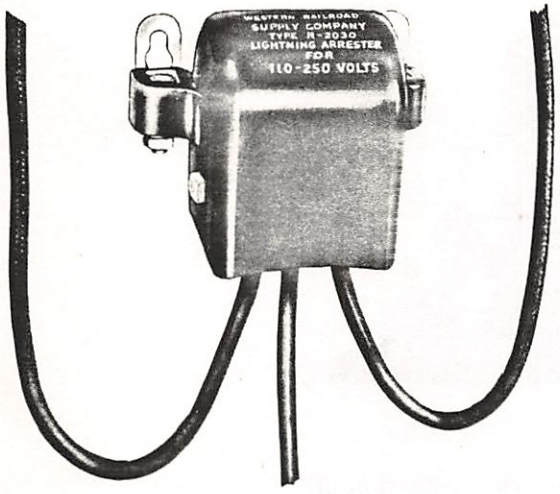

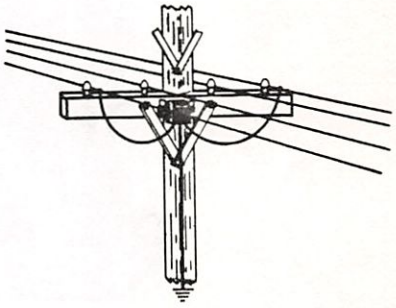

Type R2030 Lightning Arrester is similar to Type R2003 shown on opposite page and the same desirable construction features and advantages are furnished. It is of the valve type and provided with large surfaces over which repeated discharges may pass without affecting the operating characteristics of the arrester.

Type R2030 differs from R2003 in that the three wire terminals of the arrester provide for two connections to line and one to ground. Thus, the obvious advantages of one arrester replacing two of the R2003 type and the conserving of cross-arm space, will be noted.

From the standpoint of service, efficiency and dependability, the Type R2030 Lightning Arrester is unsurpassed in its particular field of application.

Ref. No.	Description	Piece No.
A	Type R-2030 Lightning Arrester, Complete for 110-250 volt line (36" leads)	2030-32
A1	Same as Ref. A but for 440-750 volt line	2030-36
A2	Same as Ref. A but with "T" connectors on line leads and clamp connector on ground lead	2030-33

Type R-2013 Coil Shunts

Adjustable to all spacings up to 6 inches; or over if specially called for.

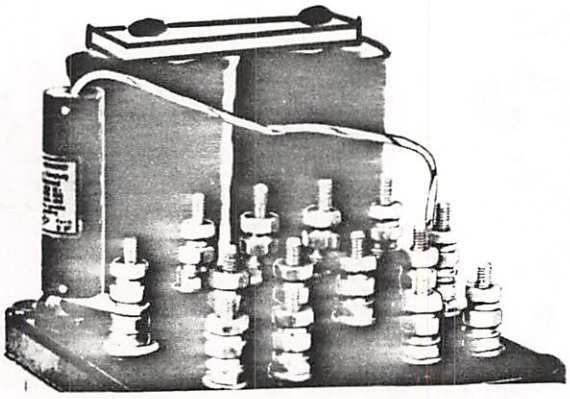

The advantage of shunts for the protection of relay and searchlight signal coils cannot be fully appreciated unless the rare-gas tube types are used, especially when it is considered that in a rare-gas a spark will occur at potentials of 1/50 of the voltage required in air. It will have the same relative efficiency compared with the air-gap shunt as the rare-gas tube arrester has, compared with the air-gap arrester. In order for the air-gap shunt to be efficient it is necessary to have the plates so closely positioned that there is a constant danger of short-circuiting or fusing. This condition is entirely eliminated by the rare-gas shunt, in which electrodes are widely spaced and further protected by being in a sealed chamber, insuring minimum maintenance.

The shunts consist of a rare-gas tube enclosed in a heavy shell fitted with a clip connection on one end and flexible connection on the other end.

This construction permits this shunt to be applied to apparatus having different post spacings.

Ref. No.	Description	Piece No.
A	Type R-2013 Rare-Gas Coil Shunt, 200-400 volt breakdown.....	2013-1

RESISTANCE UNITS

CONTENTS

	Page No.
Adjustable	21-2 to 21-10
Fixed	21-21 to 21-23

WESTERN-CULLEN-HAYES, Inc.
2700 West 36th Place • Chicago, Illinois 60632 • Telephone: 312/254-9600 • Telex 25-3206

Ohm's Law Calculator

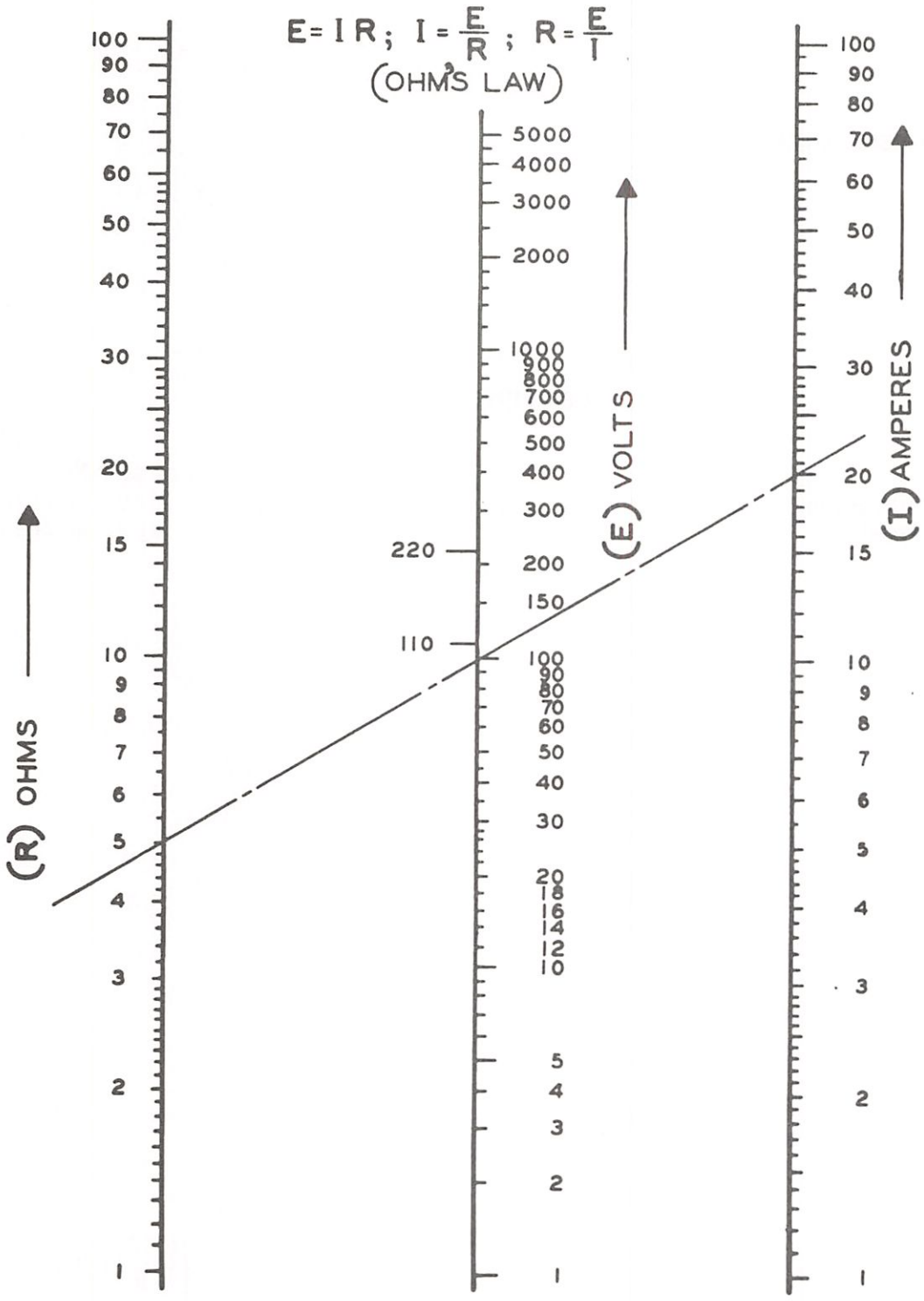

DIRECTIONS

LAY STRAIGHT EDGE ON ANY TWO KNOWN VALUES AND READ UNKNOWN VALUE ON THIRD SCALE.

Type No. 7321 Adjustable Resistance Unit

ROUND BASE TYPE — 0.9 OHM

Type 7321 Variable Resistance Unit was primarily designed for use in primary battery track circuits for which it has been eminently satisfactory. It consists of a circular porcelain block in which four A.A.R. non-turning posts are mounted.

The wire in this unit is continuous and is looped under the different binding posts on the surface of the porcelain, thus doing away with all soldered connections. No. 16 Nichrome wire is used.

For most locations it is desirable that the base of these resistance units be filled with sealing compound. In others, the extra heat dissipation of open wire is an advantage and sealing compound is omitted.

Packed one in a carton with one blued wood screw for mounting.

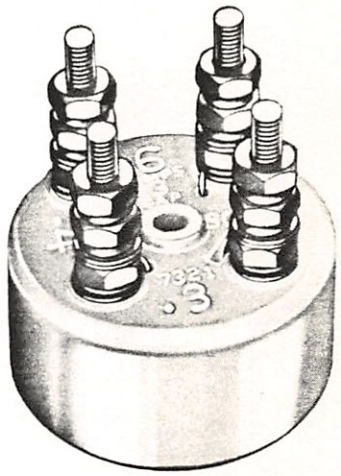

2¾" dia., 3" high

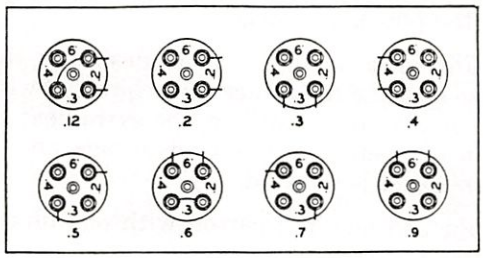

Resistances Obtainable

Ref. No.	Description	Piece No.
A	Type 7321 Adjustable Resistance Unit	7321-F
A1	Same as Ref. A but not filled with sealing compound	7321

Type 7327 Adjustable Track Resistance Unit

0.1 TO 2.5 OHMS

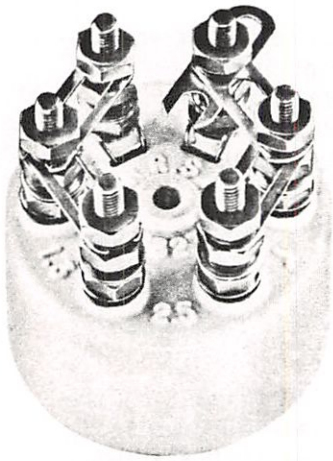

3" dia., 3¼" high

Type 7327 Track Resistance Unit is adjustable from 0.1 ohm to 2½ ohms in 0.1 ohm steps. One continuous piece of No. 18 B&S gauge bare Nichrome resistance wire is used, which is looped to the binding posts on the surface of the block. Resistance values are plainly embossed on the porcelain block.

For most locations it is desirable that the base of these resistance units be filled with sealing compound. In others, the extra heat dissipation of open wire is an advantage and sealing compound is omitted.

Packed one in a carton with one blued wood screw for mounting.

Ref. No.	Description	Piece No.
A	Type 7327 adjustable Track Resistance Unit	7327F
A1	Same as Ref. A but not filled with sealing compound	7327
	REPLACEMENT PARTS	
1	Shunting plate	7323-2

Type 7323 Universal Adjustable Track Resistance

5 OHM 10 OHM

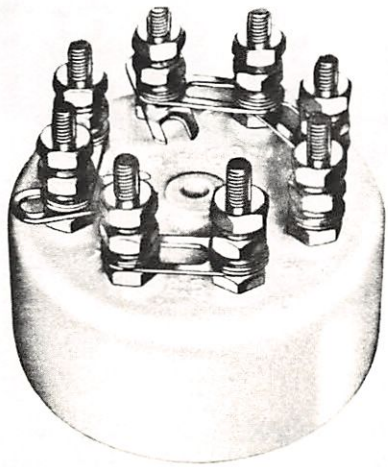

3¾" dia., 3¼" high

The standard 7323 Universal Adjustable Track Resistance is adjustable in 1/10 ohm steps from 1/10 ohm to 5 ohms. It was specially designed for use in track circuits where storage battery is used, but it is universally adaptable to track circuits fed by either storage or primary battery.

The resistance consists of No. 18 enameled nichrome wire in the 2½ and 1 ohm steps and No. 16 in the smaller steps. The No. 18 will carry 5 amperes and the No. 16 will carry 6 amperes without overheating. Ample protection against lightning and accidental high currents is provided.

Special type 7323 Adjustable Resistance unit, having a total resistance of 10 ohms, is available. Steps of .02, .02, .05, .05, 1, 2.5 and 5.1 ohms are provided.

Connections should be made to posts either side of space marked 5 or 10 and shunting plates removed from spaces marked with the resistance values desired in the circuit.

For most locations it is desirable that the base of these resistance units be filled with sealing compound. In others, the extra heat dissipation of open wire is an advantage and sealing compound is omitted.

Packed one in a carton with one blued wood screw for mounting.

Ref. No.	Description	Piece No.
A	Type 7323 Universal Track Resistance, 5 ohms	7323-F
A1	Same as Ref. A but 10 ohms	7323-6
A2	Same as Ref. A but not filled with sealing compound	7323
	REPLACEMENT PARTS	
1	Shunting Plate	7323-2

Narrow Type E1702 Adjustable Resistance Unit

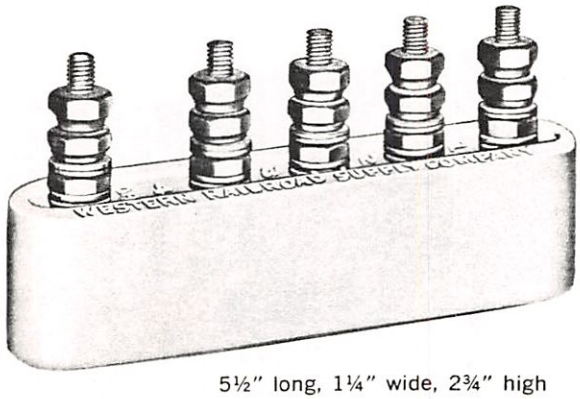

5½" long, 1¼" wide, 2¾" high

The resistance of the Type E1702 Resistance unit are accurately measured. A single continuous piece of heavy nichrome wire is used. Each tapped portion is brought to the surface of the porcelain where it is securely fastened to binding posts where it can be seen. Standard units are made with resistances from one-tenth to one ohm. They can also be furnished with two ohms and 10 ohms total resistance on the same basis, and other values as shown.

TYPICAL SCHEDULE OF RESISTANCES FOR 1 OHM UNIT

Connect 1 and 2—0.1 ohm
Connect 2 and 3—0.2 ohm
Connect 3 and 4—0.3 ohm
Connect 4 and 5—0.4 ohm
Connect 2 and 4—0.5 ohm
Connect 1 and 4—0.6 ohm
Connect 3 and 5—0.7 ohm
Connect 1 and 5 and strap
between 2 and 3—0.8 ohm
Connect 2 and 5—0.9 ohm
Connect 1 and 5—1.0 ohm

Ref. No.	Description	Piece No.
A	Type E 1702 Resistance Unit complete, 1 Ohm. (Steps 0.1, 0.2, 0.3, 0.4 Ohm)	E1702-11
A1	Same as Ref. A but 2 Ohms. (Steps 0.2, 0.4, 0.6, 0.8 Ohm)	E1702-12
A2	Same as Ref. A but 10 Ohms. (Steps 1, 2, 3, 4 Ohms)	E1702-13
A3	Same as Ref. A but 2.3 Ohms. (Steps 0.4, 0.5, 0.6, 0.8 Ohm)	E1702-16
A4	Same as Ref. A but 1.5 Ohms. (Steps 0.1, 0.2, 0.4, 0.8 Ohms)	E1702-19
A5	Same as Ref. A but 6 Ohms. (Steps 0.5, 1, 2, 2.5 Ohms)	E1702-23
A6	Same as Ref. A but 5.25 Ohms. (Steps 0.35, 0.70, 1.4, 2.8 Ohms)	E1702-27
	REPLACEMENT PARTS	
1	Shunting Plate	E7323-2

Type E1705 Adjustable Resistance Unit

0.1 TO 5.0 OHMS

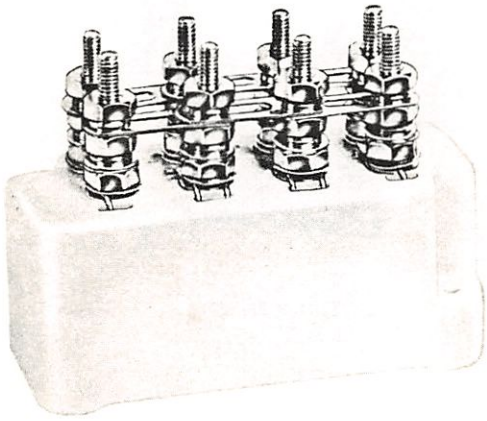

4 13/16" long, 1 5/16" wide, 3 7/16" high (overall)

This type of adjustable resistance unit meets any track circuit need where storage batteries are used. It can also be used on primary battery track circuits if desired.

While the unit was designed large enough so that a very heavy nichrome wire could be used to provide protection against burn-outs due to lightning or accidental high currents, yet it is compact and occupies very little space. A continuous piece of No. 16 nichrome wire is used for .1, .2, and .4 ohm steps of the unit. A continuous piece of No. 19 nichrome wire is used for .8, 1.5, and 2 ohm steps. The two sides are connected above the base by a copper connector.

As in our other types of resistance units, there are no soldered or hidden connections in this 5-ohm unit. Each tapped portion of the resistance is brought to the surface of the porcelain, where it is securely fastened to A.A.R. binding posts so that the wires are visible.

Adjustable in 1/10 ohm steps from 1/10 ohm to 5 ohms

Ref. No.	Description	Piece No.
A	Type E-1705 Adjustable Resistance Unit complete with one connecting plate and six shunting plates, 5 ohm	E1705-12
	REPLACEMENT PARTS	
1	Shunting plate	7323-2

Type 1110 Adjustable Slide Resistance Unit

4 13/16" long, 1" wide, 3 5/16" high

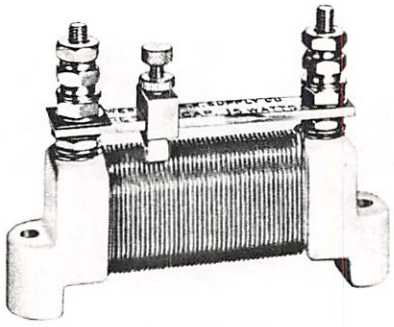

21 Turn Resistor

Standard Type 1110 Slide Resistance Units have resistances as specified in the tables below.

On Western adjustable Slide Resistance Units, the slider can be loosened, moved and re-tightened without losing contact with the resistance wire, an exclusive feature, and construction is such that should the slider become broken, the total resistance of the winding is then in the circuit.

The bare michrome wire used in 21 turn and 42 turn units is wound in grooves in the porcelain and when enamel wire is wound turn-to-turn the space is completely filled so the wire will not move under pressure of the slider as adjustments are made.

Two wood screws are furnished with each resistance unit for mounting.

RATING IN WATTS — 15 MAXIMUM

Ref. No.	Description	Total Resistance in ohms	Ohms per step	Piece No.
A	Type 1110 Variable Resistance with 21 turns....	1.0	0.05	1110-1
A1	Same as Ref. A except.....	1.5	0.075	1110-2
A2	Same as Ref. A except.....	2.26	0.10	1110-3
A3	Same as Ref. A except.....	2.88	0.13	1110-4
A4	Same as Ref. A except.....	3.56	0.16	1110-5
A5	Same as Ref. A except.....	4.50	0.225	1110-6

Type 1110 Variable Slide Resistance Unit

4 13/16" long, 1" wide, 3 5/16" high

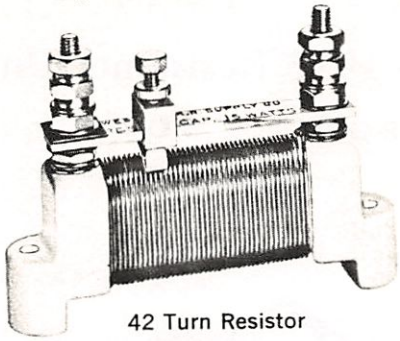

42 Turn Resistor

RATING IN WATTS — 15 MAXIMUM

Ref. No.	Description	Total Resistance in ohms	Ohms per step	Piece No.
B	Type 1110 Variable Resistance with 42 turns	2.81	0.067	1110-4D
B1	Same as Ref. B except	3.50	0.083	1110-5D
B2	Same as Ref. B except	4.50	0.107	1110-6D
B3	Same as Ref. B except	5.69	0.133	1110-7D
B4	Same as Ref. B except	7.03	0.167	1110-8D
B5	Same as Ref. B except	8.90	0.212	1110-9D
B6	Same as Ref. B except	11.21	0.267	1110-10D
B7	Same as Ref. B except	14.24	0.339	1110-11D
B8	Same as Ref. B except	17.84	0.425	1110-12D
B9	Same as Ref. B except	22.73	0.541	1110-13D
B10	Same as Ref. B except	28.66	0.682	1110-14D
B11	Same as Ref. B except	36.31	0.866	1110-15D
B12	Same as Ref. B except	45.53	1.084	1110-16D
B13	Same as Ref. B except	57.81	1.376	1110-17D
B14	Same as Ref. B except	71.89	1.706	1110-18D
B15	Same as Ref. B except	91.80	2.186	1110-19D
B16	Same as Ref. B except	115.91	2.711	1110-20D

Resistor wound turn-to-turn with enamel wire.

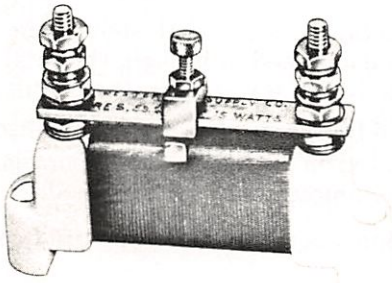

RATING IN WATTS — 15 MAXIMUM

Ref. No.	Description	Total Resistance in Ohms	Ohms per step	Piece No.
C	Type 1110 Variable Resistance with enameled wire wound turn-to-turn	21.12	.0475	1110-111
C1	Same as C except	30.18	.0333	1110-112
C2	Same as C except	42.0	.0237	1110-113
C3	Same as C except	59.59	.0168	1110-114
C4	Same as C except	84.54	.0118	1110-115
C5	Same as C except	121.40	.0082	1110-116
C6	Same as C except	135.53	.0074	1110-117
C7	Same as C except	243.62	.0041	1110-118

Type 1915 Resistance Unit

2-OHMS 5-OHMS VARIABLE

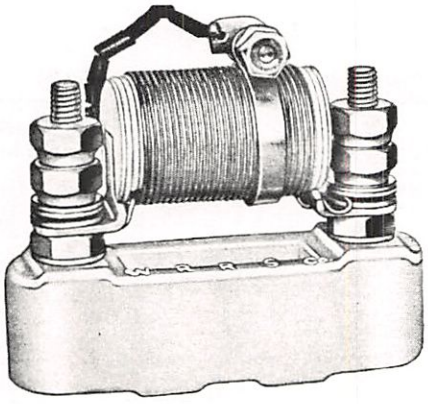

3⅜" long, 1" wide, 2⅞" high

The 1915 Resistance Units have resistances as specified in the table below. Highest quality porcelain and resistance wire are used. The resistance wire is wound on the porcelain spool and is secured to the mounting brackets both mechanically and by soldering. Adjustment of resistance is made by means of a movable clamp ring.

Construction is such that should the clamp ring become loosened or broken, the total resistance of the winding will be in the circuit.

The 1915 Resistance Units are furnished complete mounted on an A.A.R. 10565 porcelain terminal block unless otherwise specified.

Two wood screws for mounting are furnished.

RATING IN WATTS — 25 MAXIMUM

Ref. No.	Description	Piece No.
A	Type 1915 Variable Resistance Unit 2.0 Ohms	1915-1
A1	Same as Ref. A but 5.0 Ohms	1915-3
	REPLACEMENT PARTS	
1	Resistance only for Ref. A	1915-11
2	Resistance only for Ref. A1	1915-13
3	Porcelain terminal	1056-10E

Type 1240 Vitrohm Resistor Units for Railway Signal, Telegraph and Telephone Systems

Duty, Continuous. Type, Wire Wound. Vitreous Enamelled.
.01 to 5,000 Ohms

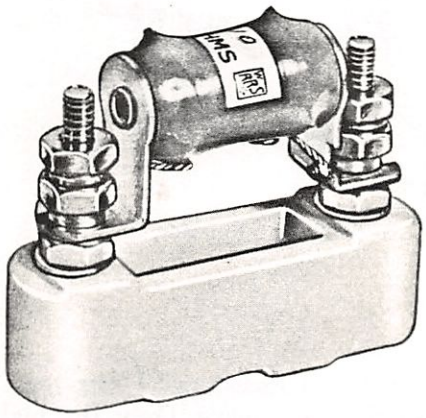

Vitrohm Fixed Resistors have proven highly successful in railroad signal and communication circuits. Many engineers have found that they can depend on these resistors for their accuracy and dependability.

Vitrohm resistors will endure a repeated heating and cooling cycle from 340°C to —20°C and prolonged exposure to high humidity and electrolysis without any effect upon either the Vitrohm enamel or the resistance wire.

Smooth cylindrical ceramic cores having a high density, high dielectric strength, low porosity body with a thermal coefficient of expansion selected to match that of the body.

Resistance wire especially manufactured to meet rigid uniform characteristics and ability to withstand excessive overloads under exacting service conditions.

Terminals of high heat-resistant, high tensile-strength alloy, especially selected to insure proper expansion, good adherence to the enamel and strong anchorage to the core. They are clamped and welded securely to the core.

Junction between resistance wires and terminals are first mechanically joined then silver brazed to insure a permanent, positive, low-resistance bond between wire and terminals.

Vitrohm enamel is a hard, tough moisture and acid resisting vitreous cover possessing high heat conductivity. It completely seals the resistance wire and provides an excellent mechanical protection for the wires, terminals and their junctions.

Ref. No.	Description	Piece No.
A	Type 1240 Vitrohm Resistor, maximum continuous dissipation 15 watts, specify resistance	1240
A1	Same as Ref. A less terminal block	1240-1
	REPLACEMENT PARTS	
1	Porcelain terminal	1056-10E

Type 1120 Fixed Resistance Units

4 13/16" long, 1" wide, 3 5/16" high

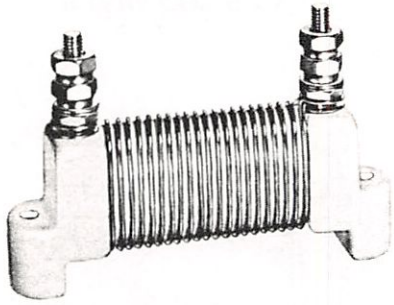

21 Turn Resistor

Type 1120 Fixed Resistance Units have resistances as specified below. Only the highest quality porcelain and resistance wire are used in their manufacture. The construction of Type 1120 is the same as that of the long-proven Type 1110 except that the slider-bar and slider have been omitted so that the resistance of the unit is fixed and not variable.

Two wood screws are furnished with each unit.

RATING IN WATTS — 15 MAXIMUM

Ref. No.	Description	Total Resistance in Ohms	Piece No.
A	Type 1120 Fixed Resistance with 21 turns	1.0	1120-1
A1	Same as Ref. A except	1.5	1120-2
A2	Same as Ref. A except	2.26	1120-3
A3	Same as Ref. A except	2.88	1120-4
A4	Same as Ref. A except	3.56	1120-5
A5	Same as Ref. A except	4.50	1120-6

42 Turn Resistor

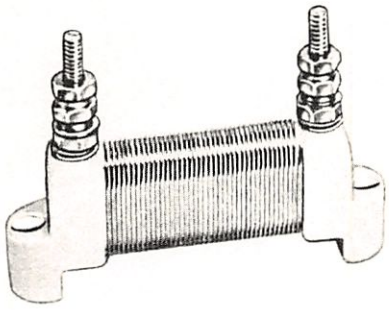

RATING IN WATTS — 15 MAXIMUM

Ref. No.	Description	Total Resistance in Ohms	Piece No.
B	Type 1120 Fixed Resistance with 42 turns	2.81	1120-4D
B1	Same as Ref. B except	3.50	1120-5D
B2	Same as Ref. B except	4.50	1120-6D
B3	Same as Ref. B except	5.69	1120-7D
B4	Same as Ref. B except	7.03	1120-8D
B5	Same as Ref. B except	8.90	1120-9D
B6	Same as Ref. B except	11.21	1120-10D
B7	Same as Ref. B except	14.24	1120-11D
B8	Same as Ref. B except	17.84	1120-12D
B9	Same as Ref. B except	22.73	1120-13D
B10	Same as Ref. B except	28.66	1120-14D
B11	Same as Ref. B except	36.31	1120-15D
B12	Same as Ref. B except	45.53	1120-16D
B13	Same as Ref. B except	57.81	1120-17D
B14	Same as Ref. B except	71.89	1120-18D
B15	Same as Ref. B except	91.80	1120-19D
B16	Same as Ref. B except	115.91	1120-20D

Resistor
Wound Turn-to-turn
with enameled wire

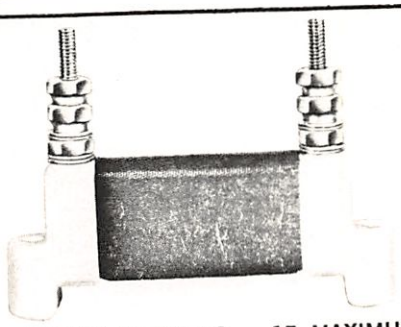

RATING IN WATTS — 15 MAXIMUM

Ref. No.	Description	Total Resistance in Ohms	Piece No.
C	Type 1120 Fixed Resistance with enameled wire wound turn-to-turn	21.12	1120-111
C1	Same as Ref. C except	30.18	1120-112
C2	Same as Ref. C except	42.0	1120-113
C3	Same as Ref. C except	59.59	1120-114
C4	Same as Ref. C except	84.54	1120-115
C5	Same as Ref. C except	121.40	1120-116
C6	Same as Ref. C except	135.53	1120-117
C7	Same as Ref. C except	243.62	1120-118

TERMINAL BLOCKS

CONTENTS

	Page No.
Terminal Blocks	22-2 22-3
Terminal Strips	22-4 & 22-5
Binding Posts, Nuts, Washers, and Connectors	22-6
Insulating Sleeves and Cap	22-10
Marking Tags	22-16
Fust Block	22-21

WC Hayes
WESTERN-CULLEN-HAYES, Inc.
2700 West 36th Place • Chicago, Illinois 60632 • Telephone: 312/254-9600 • Telex 25-3206

A. A. R. Porcelain Terminal Blocks

3⅜" long, 1" wide, 2 1/16" high

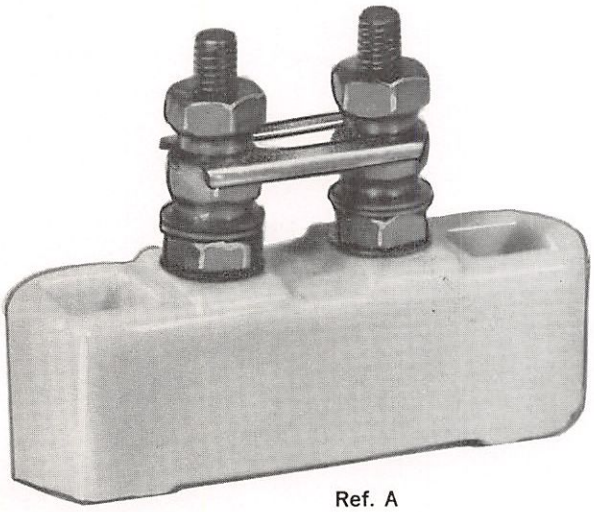

Ref. A

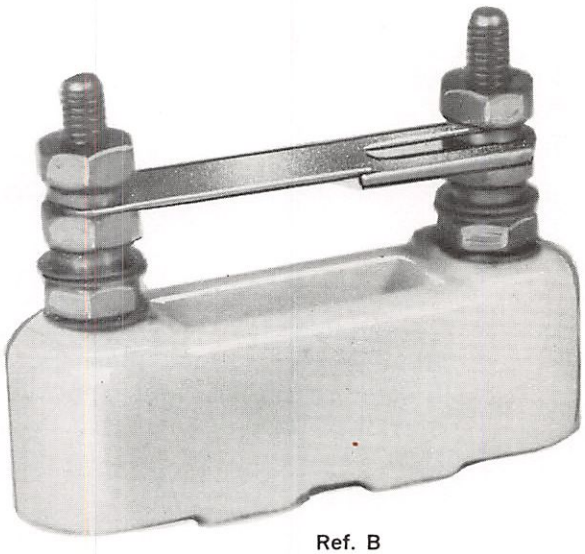

Ref. B

Terminal Block bases are dry process, glazed, homogeneous white porcelain. They will more than meet A.A.R., Signal Section, specifications for moisture absorption.

Binding Posts are Everdure Bronze. Nuts are brass and washers are chamfered copper. Connectors are half-hard copper.

All metal parts are nickel plated.

Ref. No.	Description	Piece No.
A	Type 1056 Porcelain Terminal complete with connector with Binding Posts 1" c.c. A.A.R. No. 105614	1056-3E
A1	Same as Ref. A less connector	1056-9E
B	Type 1056 Porcelain Terminal complete with connector with Posts 2⅜" c.c. A.A.R. No. 105615	1056-5E
B1	Same as Ref. B less connector	1056-10E
	REPLACEMENT PARTS	
1	Short copper connector A.A.R. No. 10761	1056-2
2	Long copper connector A.A.R. No. 10762	1056-4

A.A.R. Bakelite Terminal Block

3⅜" long, 1" wide, 2$^{17}/_{64}$" high

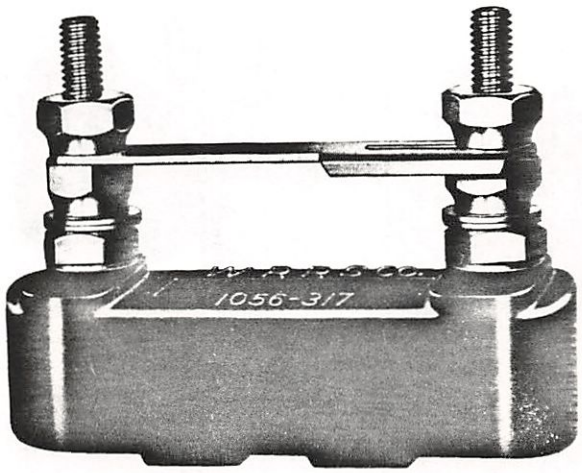

This terminal is constructed of the best bakelite with Everdur Bronze posts firmly molded into the block on 2⅜" centers.

Everdur bronze posts are nickel plated. Post protrudes from block 1⅜".

Ref. No.	Description	Piece No.
A	Type 1056 Bakelite Terminal complete with connector	1056-305
A1	Same as Ref. A less connector	1056-310
	REPLACEMENT PARTS	
1	Long copper connector A.A.R. No. 10762	1056-4

Type 2506 Terminal Strip

6" long, 2" wide, 1½" high

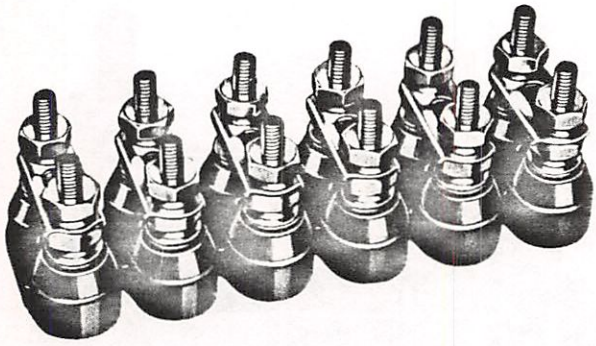

Type 2506 Terminal Strip consists of twelve Everdur Bronze bolts securely molded in a bakelite base, complete with nuts and washers. The spacing of the bolts is 1" in each direction. The block is so formed that it can easily be cut into sections. Each of the six sections is drilled so that sections can be mounted independently. The 2506 unit has become popular, due to the fact that in can easily be divided into smaller units, that it takes up very little space, and that no matter how many times it is handled it will always offer a secure, sturdy terminal.

To save installation time required to remove nuts and washers to enable wire terminals to be applied to the binding posts, 24 washers, 24 nuts and, when specified, 6 connectors are packed in a transparent plastic bag for each terminal strip.

Ref. No.	Description	Piece No.
A	Type 2506, 12 Post, Terminal Strip, complete with nuts, washers, and connecting links No. 1056-2	2506-106
A1	Same as Ref. A less connectors	2506-306
A2	Same as Ref. A but with flat connecting links No. 219-5	2506-406
	REPLACEMENT PARTS	
1	Short copper connector A.A.R. No. 10761	1056-2
2	Short copper flat connector for Ref. A2	219-5

Type 2508 Terminal Strip

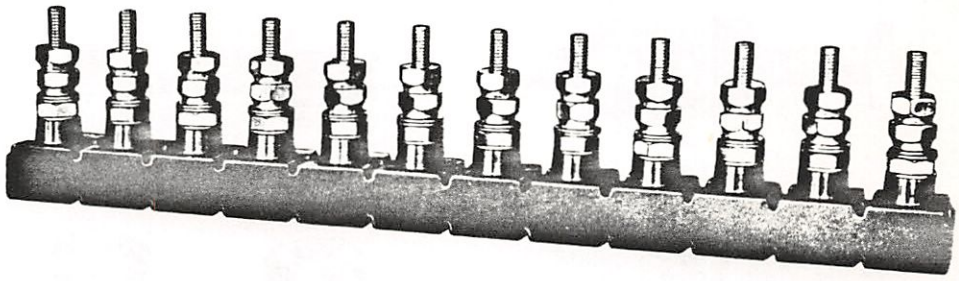

Designed in strict accordance with A.A.R. Signal Section, Drawing 1054.

Type 2508 Multiple Unit Terminal Strip is equipped with 12 Everdur Bronze bolts firmly molded in bakelite.

The units can be staggered for through wire connections to single posts, or placed side by side for 1″ connectors, or spaced in parallel for 2⅜″ connectors.

Twelve post units can easily be cut into shorter sections.

To save installation time required to remove nuts and washers to enable wire terminal to be applied to the binding posts, only the first washer and the clamp nut are applied at the factory. 24 binding nuts and 24 washers are packed in a transparent plastic bag for each terminal strip.

Ref. No.	Description	Piece No.
A	Type 2508, 12 Post, Terminal Strip with nuts and washers.....	2508-112

Binding Posts, Nuts and Washers

A.A.R. STANDARD No. 14-24 THREAD

Ref. A

Ref. 2

Ref. 3

Ref. 1

Ref. 4

Ref. 5

Ref. 6

Ref. 7

Ref. 8

All parts are furnished nickel plated.

Ref. No.	Description	Piece No.
A	Binding Post assembly complete, Everdur bronze, 1⅞" long A.A.R. No. 107010..	107010
A1	Same as Ref. A but 1½" long.....	107010-A
A2	Same as Ref. A but 2¼" long.....	107010-B
	REPLACEMENT PARTS	
1	Binding Post only Everdur bronze 1⅞" long.....	10709
1A	Same as Ref. 1 but 1½" long.....	10709-A
1B	Same as Ref. 1 but 2¼" long.....	10709-B
2	Binding Nut	10706
3	Chamfered Washer	10708
4	Clamp Nut	10707
5	Cup Washer.....	5008
6	Short copper connector A.A.R. No. 10761.....	1056-2
7	Long copper connector A.A.R. No. 10762.....	1056-4
8	Short copper flat connector.....	219-5

Binding Post Insulating Sleeve and Cap

FOR POWER SUPPLY CIRCUITS OF 110 VOLTS AND HIGHER

Insulating Sleeve
9/16" inside diam.

Insulating Cap
Red or Black

To prevent the possibility of a short circuit where binding posts are closely grouped, Western Railroad Supply Company advocates the use of the insulating caps and sleeves illustrated above.

The insulating cap is reinforced by a metal insert to safeguard against the stripping of threads. The cap is also knurled to make handling easier.

The sleeve is furnished in standard length for A.A.R. binding posts which show an exposed length of 1¼". Sleeves can be furnished, however, for posts of other lengths. Specify the dimension above the surface of the post to be protected.

Red caps are generally used to designate the positive of D.C. circuits, or the "hot" side of A.C. supply circuits.

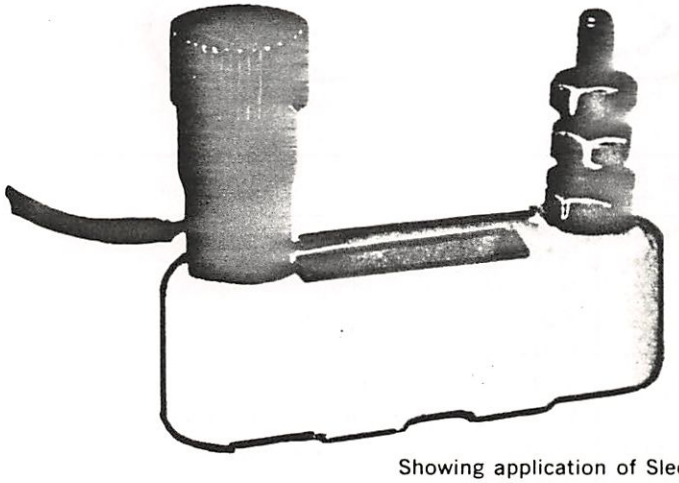

Showing application of Sleeve
and Cap to Terminal Block

Ref. No.	Description	Piece No.
A	Type R2000 Insulating Sleeve 1⅛" long, used on type 1056 terminal blocks and 2305 disconnect switch	R2000-2
A1	Same as Ref. A but 7/8" long, used on type 2506 terminal strips	R2000-2A
A2	Same as Ref. A but 1½" long, used on type 2508 terminal strips	R2000-2B
B	Type R2000 Insulating Cap, black	R2000-1
B1	Same as Ref. B but, red	R2000-1R

Marking Tags

1/16 INCH THICK

Fibre—Black, Red, Gray, White—Aluminum or Brass

Black fibre tags 1/16" thick will be furnished unless other color or aluminum or brass is specified.

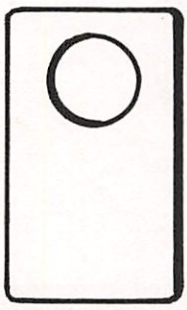

Ref. A

Ref. B

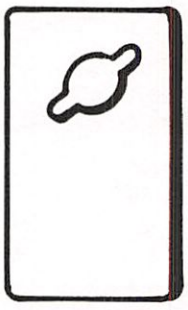

Ref. C

Ref. D

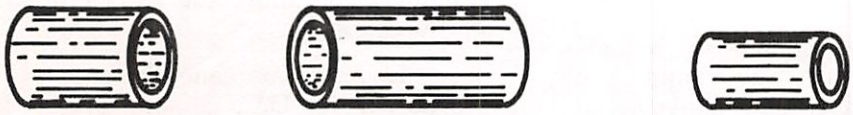

Ref. E

Ref. F

Ref. No.	Size In Inches	Diameter of Hole in Inches	Description	Piece No.
A	⅞x1½	1/2	Black fibre tag	16222
A1	⅞x1½	1/2	White fibre tag	16222W
A2	⅞x1½	1/2	Varnished black fibre tag	16222V
B	⅝x1½	1/8	Brass tag	5600-7B
B1	⅝x1½	1/8	Varnished black fibre tag	5600-7V
B2	⅝x1½	1/8	Varnished black fibre tag with string	5600-7VS
C	⅞x1½	⅜ with $\frac{9}{16}$ wing	Aluminum tag	16221A
C1	⅞x1½	3/8	Black fibre tag	16221
C2	⅞x1½	3/8	White fibre tag	16221W
C3	⅞x1½	3/8	Varnished black fibre tag	16221V
D	$1\frac{3}{32}$ Diam.	3/16	Aluminum tag	16223A
D1	$1\frac{3}{32}$ Diam.	3/16	Brass tag	16223B
E	⅝ Long	⅜ I.D. ½ O.D.	Black tubular fibre tag	5600-11
E1	⅝ Long	¼ I.D. ½ O.D.	Black tubular fibre tag	5600-12
E2	1" Long	⅜ I.D. ½ O.D.	Black tubular fibre tag	5600-26
F	½x2⅞	⅜ with ½ wing	Black fibre tag with two holes spaced 2" c.c.	5600-14
F1	½x2⅞	⅜ with ½ wing	Varnished black fibre tag with holes spaced 2" c.c.	5600-14V
F2	½x2⅞	⅜ with ½ wing	White fibre tag with holes spaced 2" c.c.	5600-14W

Porcelain Base Fuse Block

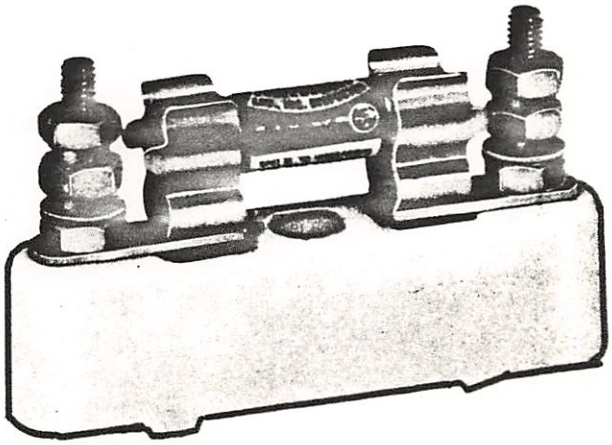

4⅛" long, 1" wide, 2$^{7}/_{16}$" high

Standard Fuse Terminal Block Mounting accommodates A.A.R. fuses 9/16" in diameter by 2" long. One No. 10 x 1½" long round head blued wood screw is furnished with each fuse block.

Ref. No.	Description	Piece No.
A	Type 2302 Fuse Block, complete with 9/16" x 2" A.A.R. fuse, state amperage....	2202
	REPLACEMENT PARTS	
1	A.A.R. cartridge fuse only, state amperage rating.....	2702
2	Fuse block only.....	2302-6

TEST AND DISCONNECT SWITCHES

CONTENTS

	Page No.
Test Switches	23-2 & 23-3
Fused Disconnect Switch	23-4
Strap Key	23-5
Key Operated Test Switches	23-10 to 23-20

WESTERN-CULLEN-HAYES, Inc.
2700 West 36th Place • Chicago, Illinois 60632 • Telephone: 312/254-9600 • Telex 25-3206

Type 0255 Test Switch

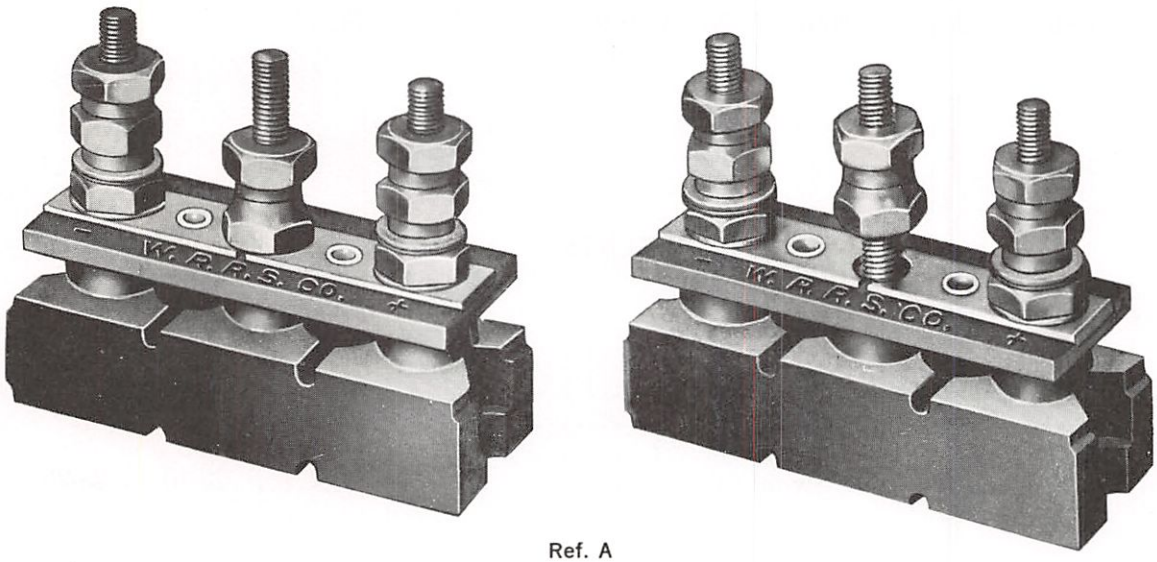

Ref. A

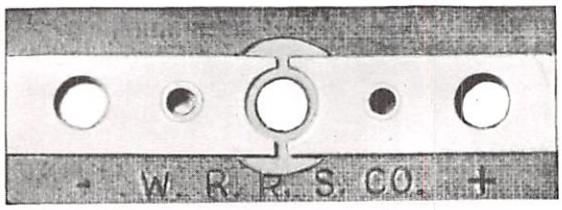

Ref. A1

The Type 0255 Test Switch is suitable for testing circuits in crossing signal installations and similar applications. It consists of a 3-hole link, made to fit a standard 3-post terminal strip. The circuit between the outer terminals can be opened, for test purposes, by releasing the middle nuts.

The link alone is available, or the complete switch, including the 3-post terminal block.

Ref. No.	Description	Piece No.
A	Type 0255 Test Switch with terminal block	0255-103
A1	Same as Ref. A less terminal block	0255-101

McKeen Test Switch

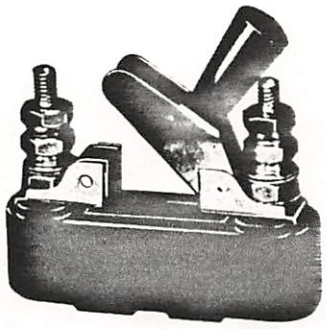

The McKeen Test Switch
Single Pole Single Throw

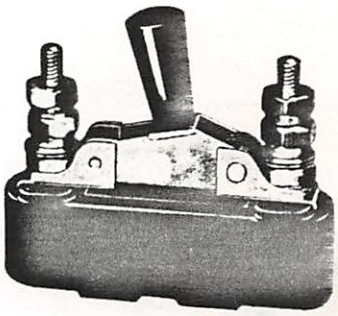

The McKeen Test Switch offers a safe means of taking meter readings at any location without danger of disrupting signal or other circuits.

The McKeen Switch consists essentially of a single pole, single throw switch mounted on a moulded black bakelite A.A.R. terminal block so constructed as to allow mounting in the circuit at any point where meter readings are frequently taken. Tests can be made by attaching the meter leads to the binding posts before opening the switch thus allowing the current to flow through the meter. The switch may then be closed and the leads removed, all of which is accomplished, obviously, without opening any circuit.

Strong springs and heavy wiping action insure perfect contact at the front contact of the switch while a soldered, flexible pigtail provides a solid electrical path in multiple with the hinge at the heel of the switch.

The standard Test Switch, when opened, will remain open until closed again by hand. A coil spring is installed on the "self-restoring" type to force the hinged blades closed when the handle is released.

Ref. No.	Description	Piece No.
A	Type 0250 McKeen Test Switch	0250-101
A1	Same as Ref. A but self-restoring	0250-1

Type 2305 Disconnect Switch

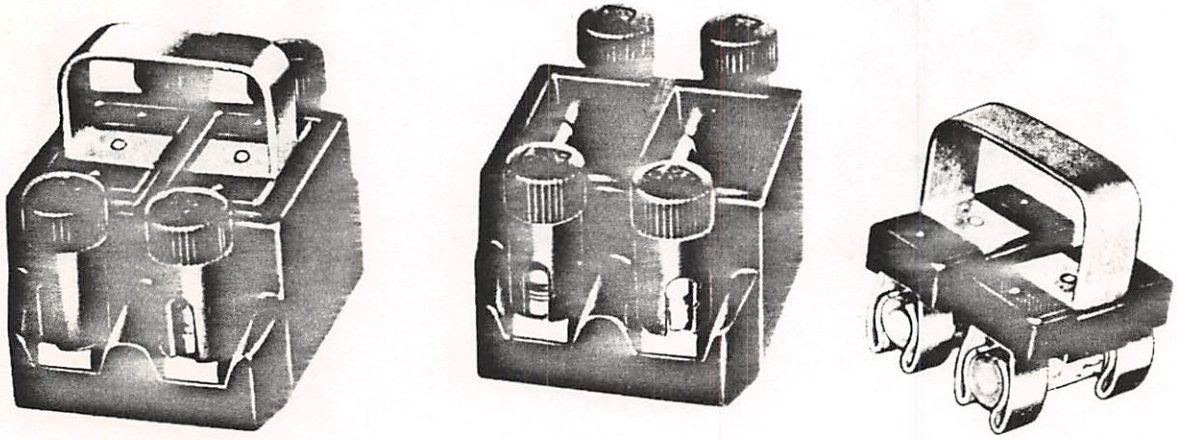

4½" long x $3\frac{1}{16}$" wide x 3¼" high over handle.

Type 2305 Two-Pole Disconnect Switches provide a dead front fuse-disconnect switch for use on two wire incoming A.C. power circuits. Main body as well as fuse holders are made of molded bakelite. Binding posts are A.A.R. No. 14-24 standard. Insulating sleeves and caps are provided on all binding posts to eliminate possibility of accidental shorts or physical contact with current carrying parts.

Disconnects are furnished two-pole with common handle as illustrated above. Fuses are standard A.A.R. cartridge type, 2" long. Mounting holes are for No. 10 screws.

IF FUSES ARE TO BE FURNISHED SPECIFY RATING UP TO 30 AMPERES MAXIMUM

Ref. No.	Description	Piece No.
A	Type 2305 Disconnect Switch (without fuses)	2305-12
A1	Same as Ref. A but complete with fuses (specify rating)	2305-32
	REPLACEMENT PARTS	
1	Two-pole fuse holder only	90101-62
2	Fuse clip only, for fuse holder	90101-55
3	Fuse clip only, for base	90101-56

Type 41 Strap Key

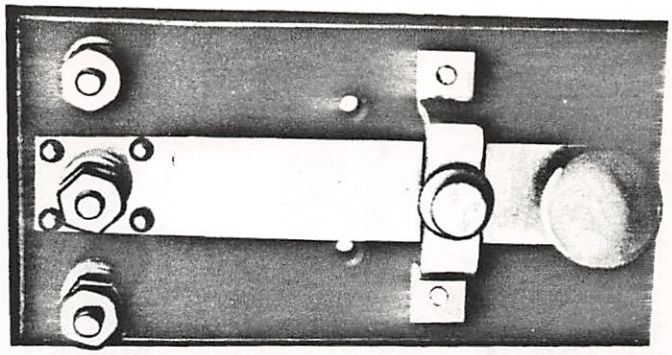

Base Dimensions — 3⅜" x 5¾"

Type 41 Strap Key is substantially made with a bakelite base and is provided with three standard A.A.R. binding posts and upper and lower platinum contacts. The contact spring is made of heavy phosphor bronze and gives strong pressure against the contact. It is so arranged that it can be used for normally open or normally closed circuits, or both.

Ref. No.	Description	Piece No.
A	Type 41 Strap Key complete	0041
	REPLACEMENT PARTS	
1	Knob for Strap Key	0041-3
2	Bridge	0041-4
3	Knurled Lock Nut	445
4	Contact Screw	444

Type 2190 Key Operated Test Switch

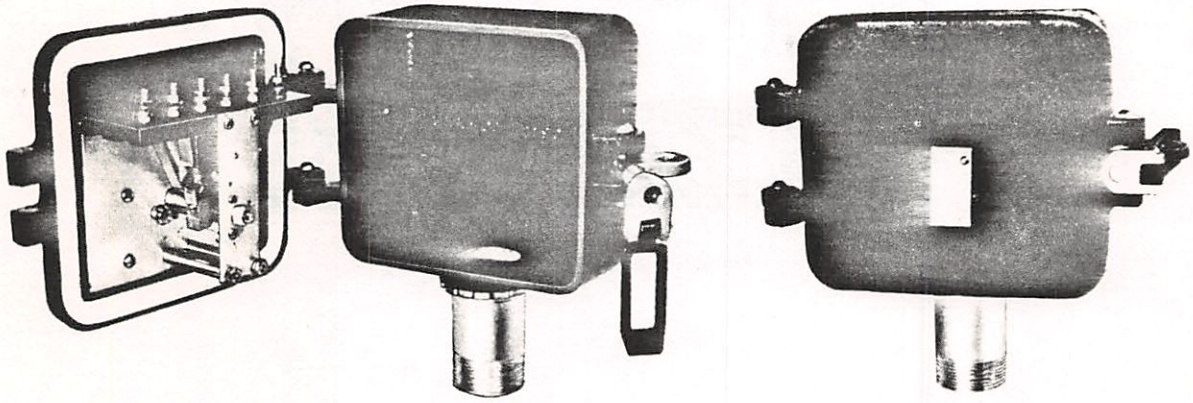

Ref. A

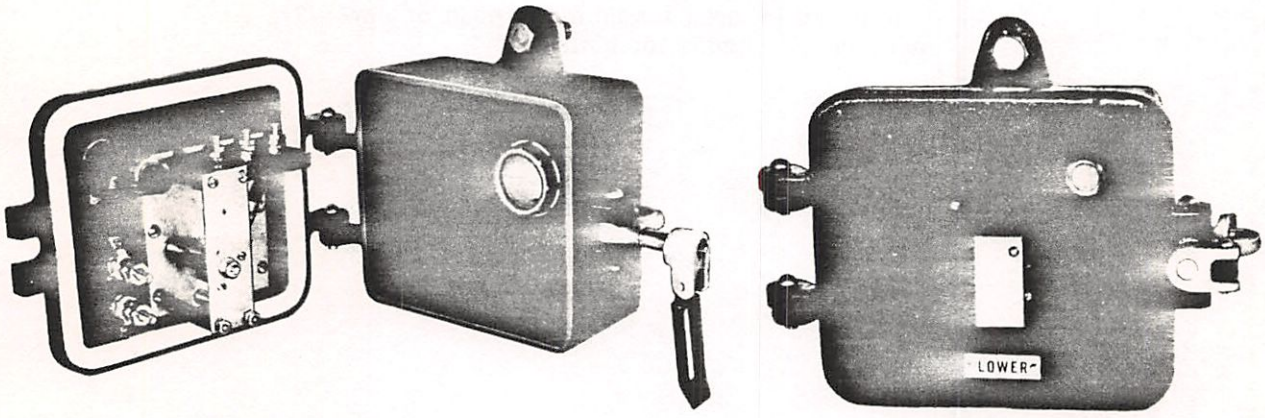

Ref. B

Type 2190 Key Operated Test Switch

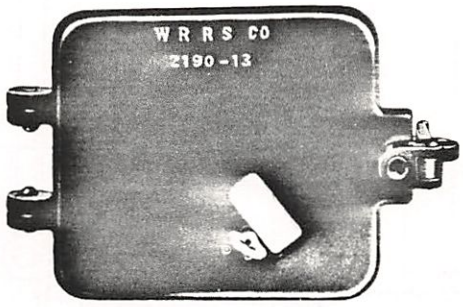

Type 2190 Key Operated Test Switch Boxes are provided with one or two dependent front and back contacts for any use desired such as the testing of crossing signals or for the control of signals at crossings during switching operations at, or near, a crossing signal installation. The switch is operated only with the standard switch key of the railroad to which it is being shipped. When operated to the reverse position, the key can not be removed. The contact must be restored to normal to release the key.

The 1½" pipe nipple furnished with Ref. B test boxes is intended for use in installing the test box atop an instrument case in one of the tapped holes for cable outlet. This box can, of course, be mounted on any 1½" pipe. A 1¼" pipe nipple of sufficient length to extend into a sheet metal instrument case is supplied with the flush mounting type.

The keyhold cover is weighted to insure coverage to keep rain, snow, etc. out of the keyhole.

Ref. No.	Description	Piece No.
A	Type 2190 Key Operated Test Switch Box for flush mounting; one key switch and one light indicator. One set of contacts, with one normal open and one normal closed dependent contact. Indicating lamp 18-24 V. candelabra screw base. (Specify key to be used)	2190-612L
A1	Same as Ref. A less light indicator	2190-612
B	Type 2190 Key Operated Test Switch Box for mounting on top of threaded 1½" pipe or nipple; with one key switch. One set of contacts with one normal open and one normal closed dependent contact. (Specify key to be used)	2190-611
B1	Same as Ref. B but with two sets of contacts, each set with one normal open and one normal closed dependent contact	2190-621
B2	Same as Ref. B but with one set of contacts with two normal open and two normal closed dependent contacts and with terminal strip	2190-651

See following page for replacement parts

Type 2190 Key Operated Test Switch

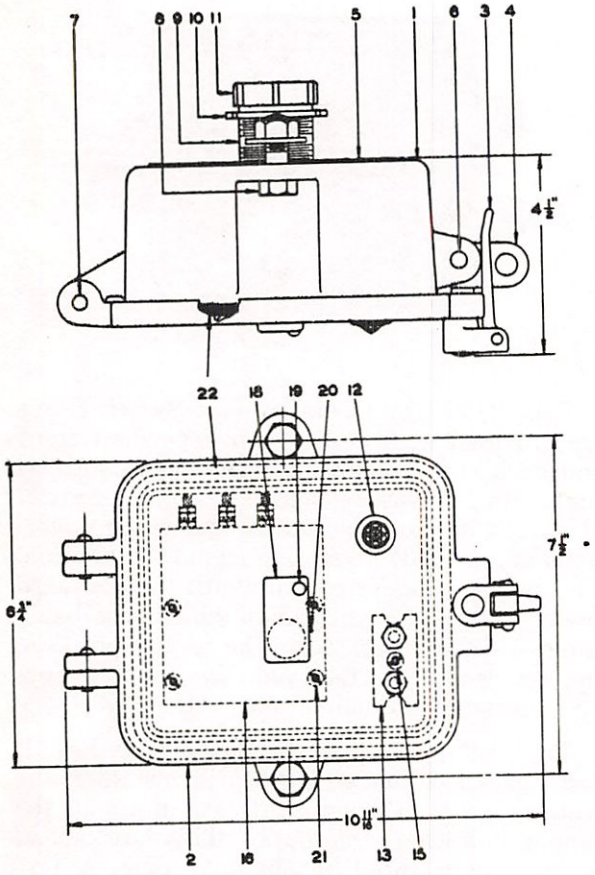

Ref. A

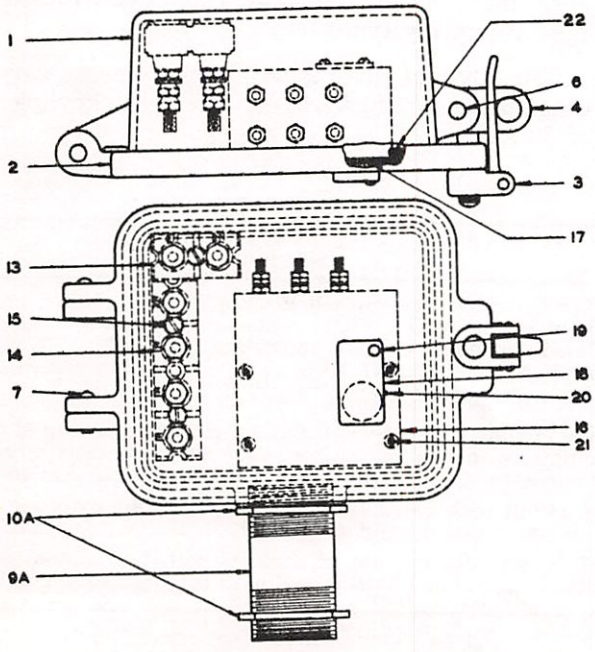

Ref. B

Type 2190 Key Operated Test Switch

Ref. No.	Description	Piece No.
	REPLACEMENT PARTS	
1	Case for Ref. A and A1	2190-12
1A	Case for Ref. B and B1	2190-11
1B	Case for Ref. B2	2190-11A
2	Cover for Ref. A	2190-227L
2A	Cover for Ref. A1 and B	2190-227
2B	Cover for Ref. B1	2190-210
2C	Cover for Ref. B2	2190-227A
3	Hasp complete	1410-31
4	Hasp eye bolt	1410-11
5	Gasket	2190-34
6	1/4" x 1¾" lg. rd. hd. rivet (brass)	
7	1/4" x 1" lg. rd. hd. rivet (brass)	
8	1/2" x 1½" lg. hex. hd. bolt, hex. nut and washer	
9	1¼" x 1⅝" lg. close pipe nipple for Ref. A	
9A	1½" pipe nipple — 3½" lg. for Ref. B	
10	1¼" pipe locknut for Ref. A	
10A	1½" pipe locknut for Ref. B	
11	1¼" conduit bushing	
12	Lamp indicator complete	90803-48W
13	2-post Terminal strip	2508-102
14	4-post Terminal strip	2508-104
15	No. 10 - 32 x 5/8" lg. rd. hd. mach. screw	
16	Key mechanism, specify key to be used (See page 23-20 for details)	
17	Separator	2190-530
18	Keyhold cover	2190-29
19	1/8" x 3/8" lg. rd. hd. rivet (brass)	
20	1/16" x 5/16" lg. pin (brass)	
21	No. 10 - 32 x 3/8" lg. rd. hd. machine screw (brass)	
22	Torchwick Parking 1/2" dia. x 25½" lg.	

Key Operated Test Switches

Types 1245, 1246 and 1266

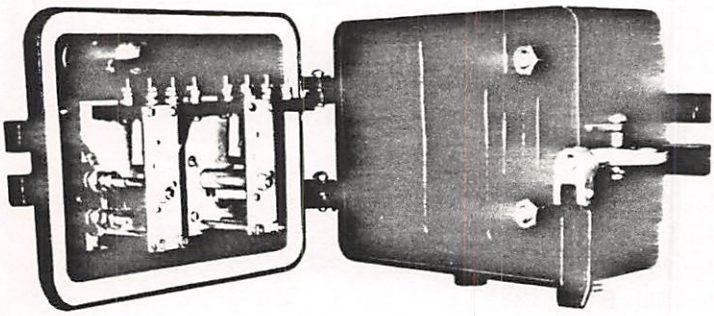

Ref. A

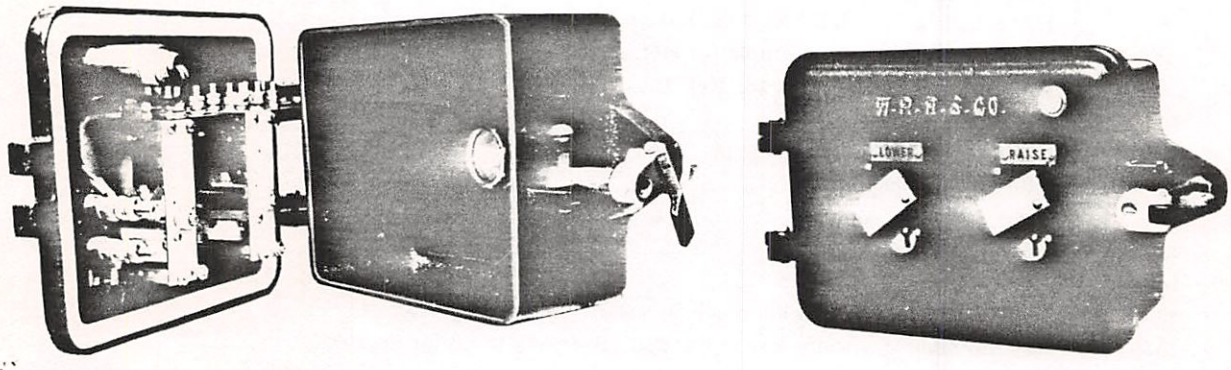

Ref. B

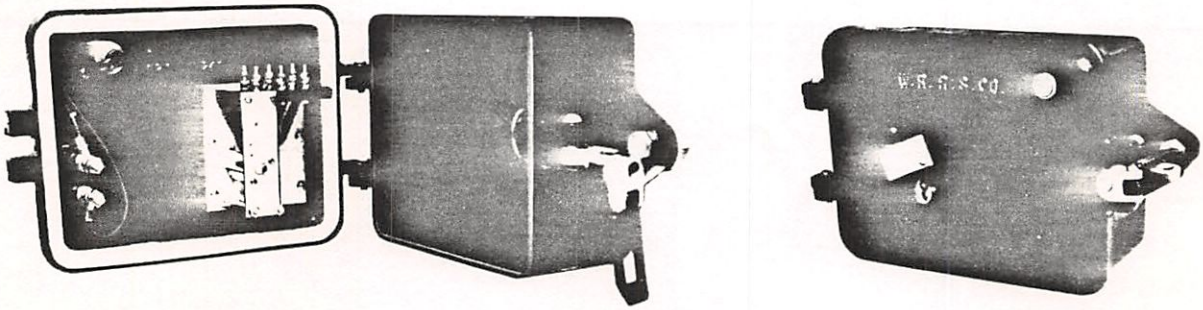

Ref. C

Key Operated Test Switches

Types 1245, 1246 and 1266

Type 1245 Key Operated Test Switch Boxes provide separately housed test switches and, if specified, indicator lamps for the use of signalmen and other authorized persons to make periodic tests of crossing signals. Furnished with adaptor clamps and U-Bolts for mounting on the side of a 4″ or 5″ I.D. pipe. Lamp receptacle is for candelabra screw base, G 6 bulb, lamp.

A 1½″ pipe nipple of sufficient length to extend into a sheet metal instrument case is supplied with the flush mounting types.

Type 1246 Key Operated Test Switch Boxes are identical with Type 1245 except that they are for flush mounting.

Type 1266 Key Operated Test Switch Boxes are identical with Type 1246 except with one key operated switch.

The key operated mechanism is so made that only the specified switch key or other designated key will operate the contacts.

Ref. No.	Description	Piece No.
A	Type 1245 Key Operated Test Switch Box for pole mounting; two key switches and one light indicator. Each key operates two sets of front and back dependent contacts. Indicating lamp 18-24 V. candelabra screw base. (Specify designation plate wording, I.D. of pipe and key to be used)	1245-612HX
A1	Same as Ref. A less indicating lamp, but each key with one set of front and back dependent contacts	1245-602H
B	Type 1246 Key Operated Test Switch Box for flush mounting; two key switches and one light indicator. Two sets of front and back dependent contacts. Indicating lamp 18-24 V. candelabra screw base. (Specify designation plate wording and key to be used)	1246-612HX
B1	Same as Ref. B less indicating lamp	1246-602H
B2	Same as Ref. B less indicating lamp but left key with two sets of front and back dependent contacts and right key with one set of front and back dependent contacts	1246-602HB
C	Type 1266 Key Operated Test Switch Box for flush mounting; one key switch and one light indicator. Two sets of front and back dependent contacts. (Specify designation plate wording and key to be used)	1266-614HX

Key Operated Test Switches

Types 1245, 1246 and 1266

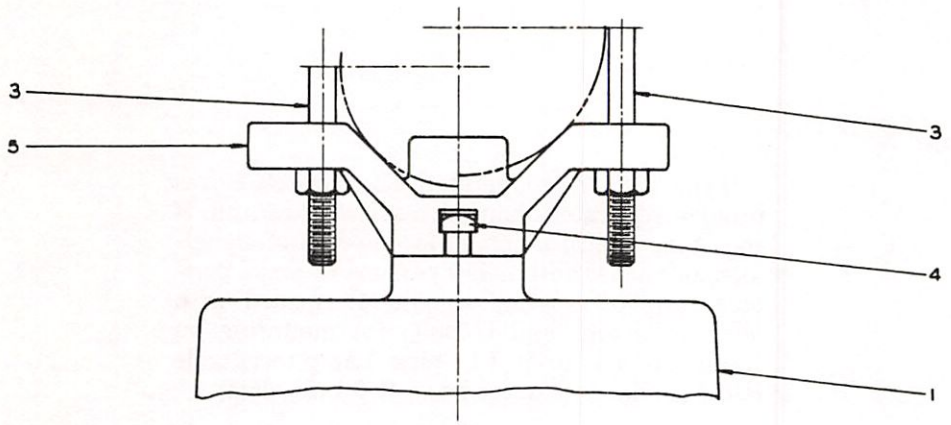

REF. A

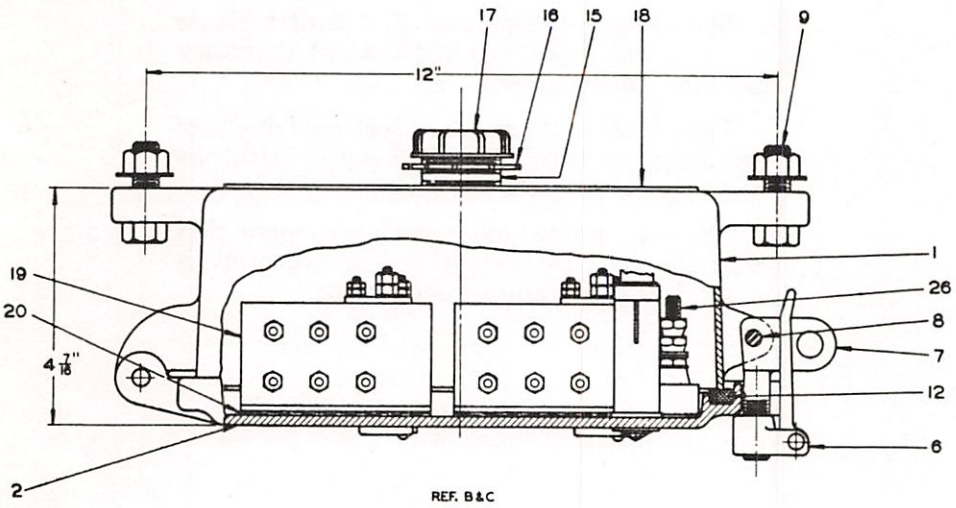

REF. B&C

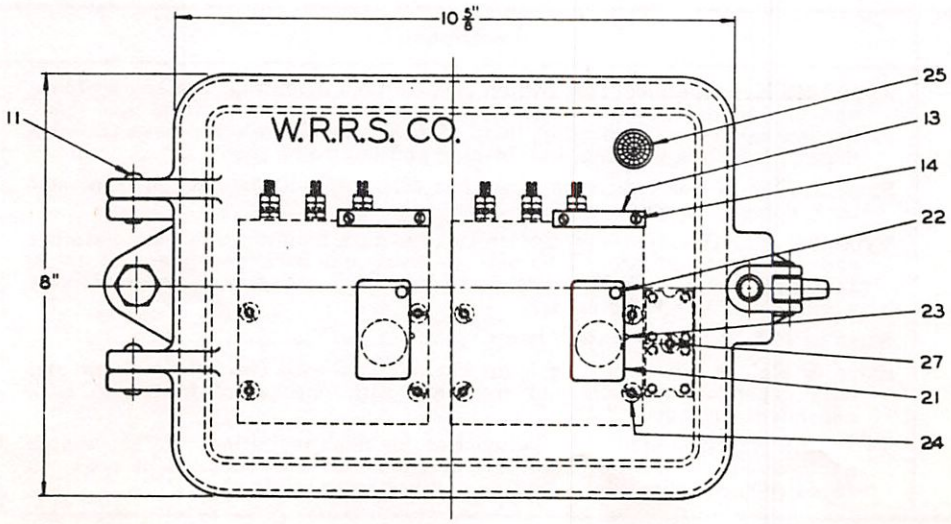

Key Operated Test Switches

Types 1245, 1246 and 1266

Ref. No.	Description	Piece No.
	REPLACEMENT PARTS	
1	Case for Ref. A and A1	1265-1C
1A	Case for Ref. B, B1, B2, and C	1266-5
2	Cover for Ref. A and B	1265-560
2A	Cover for Ref. A1, B1, and B2	1265-555
2B	Cover for Ref. C	1265-556
3	"U" bolt for 5" pipe	3364-5
3A	"U" bolt for 4" pipe	3364-2
4	1/2" - 13 x 2" lg. sq. hd. mach. bolt, hex. nut and pl. washer	
5	Clamp	1265-102
6	Sub-assembly of locking hasp	1410-31
7	Hasp eye bolt	1410-11
8	5/16" x $1\frac{7}{16}$" lg. rivet (brass)	
8A	5/16 x 1¾" lg. rd. hd. rivet for Ref. C only (brass)	
9	1/2" - 13 x 2" lg. sq. hd. bolt and hex. nut	
9A	1/2" - 13 x 2" lg. hex. hd. mach. bolt, hex. nut and washer for Ref. C only	
10	Ventilator for Ref. A and A1 only	1265-6
11	1/4" x 7/8" lg. rivet (brass)	
12	7/16" x 33" lg. torchwick packing	
13	Designation plate (brass) state wording	
14	No. 4-36 x 1/4" lg. rd. hd. mach. screw (brass)	
15	1¼" x 1⅝" lg. close pipe nipple	
16	1¼" pipe locknut	
17	1¼" pipe bushing	
18	Gasket	
19	Key Mechanism, specify key to be used (see page 23-20 for details)	
20	Separator	2190-530
21	Keyhole cover	2190-29
22	1/8" x 3/8" lg. rd. hd. rivet (brass)	
23	1/16" x 5/16" lg. pin (brass)	
24	No. 10-32 x 3/8" lg. rd. hd. mach. screw (brass)	
25	Lamp indicator complete	90803-48W
26	Terminal block	2508-12
27	No. 10-32 x 5/8" lg. rd. hd. mach. screw (brass)	

Type 1245 Key Operated Test Switch

FOR PIPE MOUNTING

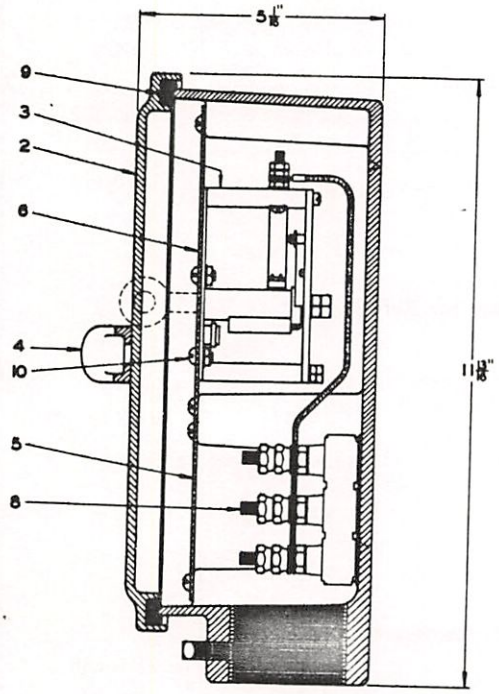

SECTION AA

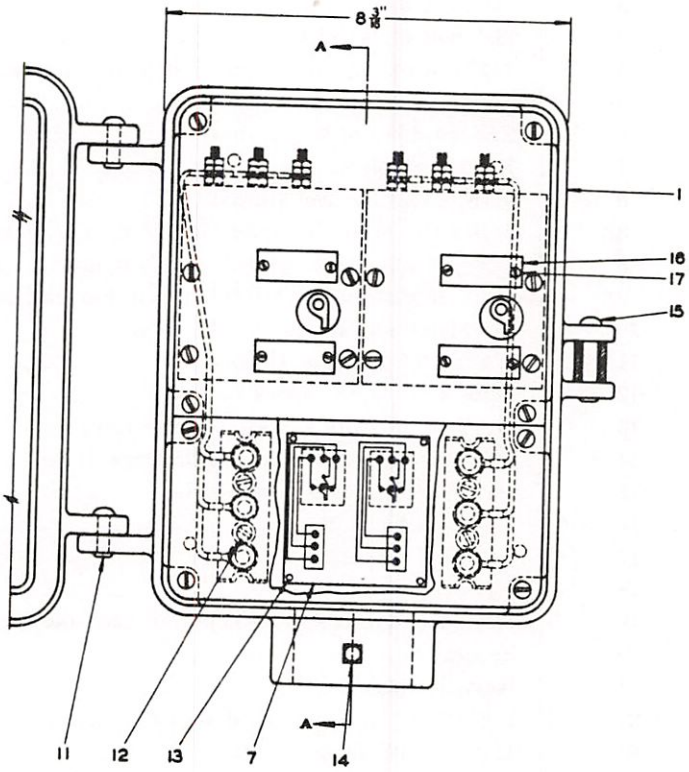

Ref. A

Type 1245 Key Operated Test Switch

FOR PIPE MOUNTING

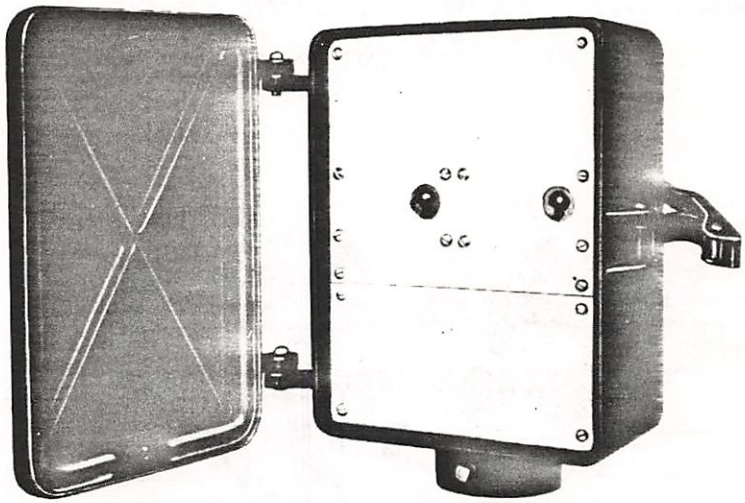

In Type 1245 Key Operated Test Switch Boxes the key mechanism is totally enclosed in a cast iron box. This box can be locked with any type of padlock so that only authorized personnel can open the door to gain access to the test switches.

Type 1245 Key Operated Test Switch Boxes are for mounting on top of 2″ pipe with two key operated switches.

Ref. No.	Description	Piece No.
A	Type 1245 Key Operated Test Switch Box for 2″ pipe mounting; two key switches. Two sets of contacts, each set with one normally open and one normally closed dependent contact. (Specify key to be used and designation plate wording)	1245-670
	REPLACEMENT PARTS	
1	Case	1245-671A
2	Cover	1245-672A
3	Key Mechanism, specify key to be used (see page 23-20 for details)	2190-541AB
4	Hasp complete	1265-40
5	Lower Panel	1245-673
6	Upper Panel	1245-674
7	Wiring Diagram Plate	1245-675
8	Terminal Block	2508-103
9	1/2″ dia. Torchwick Packing 35¾″ long	
10	No. 10-32 x 3/8″ lg. rd. hd. mach. sc. with hex. nuts and lock washer (brass)	
11	1/4″ x 1″ lg. rd. hd. rivet (brass)	
12	No. 10-32 x 5/8″ lg. rd. hd. mach. sc.	
13	Type "U" No. 0 x 3/16″ lg. Parker Kalon dr. scr.	
14	3/8″ - 16 x 3/4″ lg. sq. hd. cup pt. set scr.	
15	5/16″ x 1½″ lg. rd. hd. rivet (brass)	
16	Designation plate (specify wording)	
17	No. 4 - 36 x 1/8″ lg. rd. hd. mach. screw (brass)	

Contact Mechanism for Type 1245, 1246, 1266 and 2190 Test Boxes

REPLACEMENT PARTS

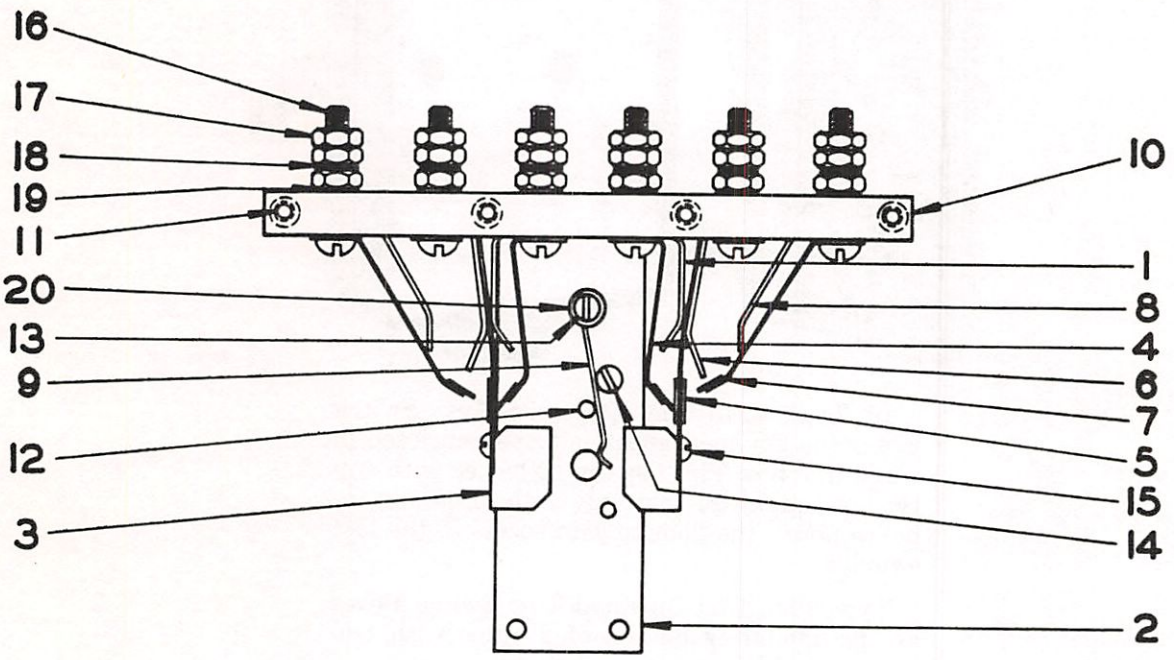

Ref. No.	Description	Piece No.
1	Short Reinforcing Spring	0300-60
2	Back Plate	2190-517
3	Insulating Block	2190-522A
4	Front Contact	2190-523
5	Movable Contact	2190-524
6	Movable Contact Keeper	2190-525
7	Back Contact	2190-526
8	Back Contact Keeper	2190-527
9	Detent Spring	2190-528
10	Contact Block	2190-532
11	No. 8-32 x 1/4" lg. fil. hd. mach. screw (brass)	
12	No. 6-32 x 5/16" lg. fil. hd. mach. screw (steel)	
13	No. 6-32 x 3/8" lg. fil. hd. mach. screw (brass)	
14	No. 6-32 x 1/8" lg. fil. hd. mach. screw (brass)	
15	No. 4-36 x 1/4" lg. rd. hd. mach. screw (brass)	
16	No. 10-32 x 1⅛" lg. rd. hd. mach. screw (brass)	
17	No. 10-32 Hex. Nut (brass)	
18	No. 10 Plain Washer (brass)	
19	No. 10 Internal Everlock Washer (steel)	
20	No. 6 Plain Washer (brass)	

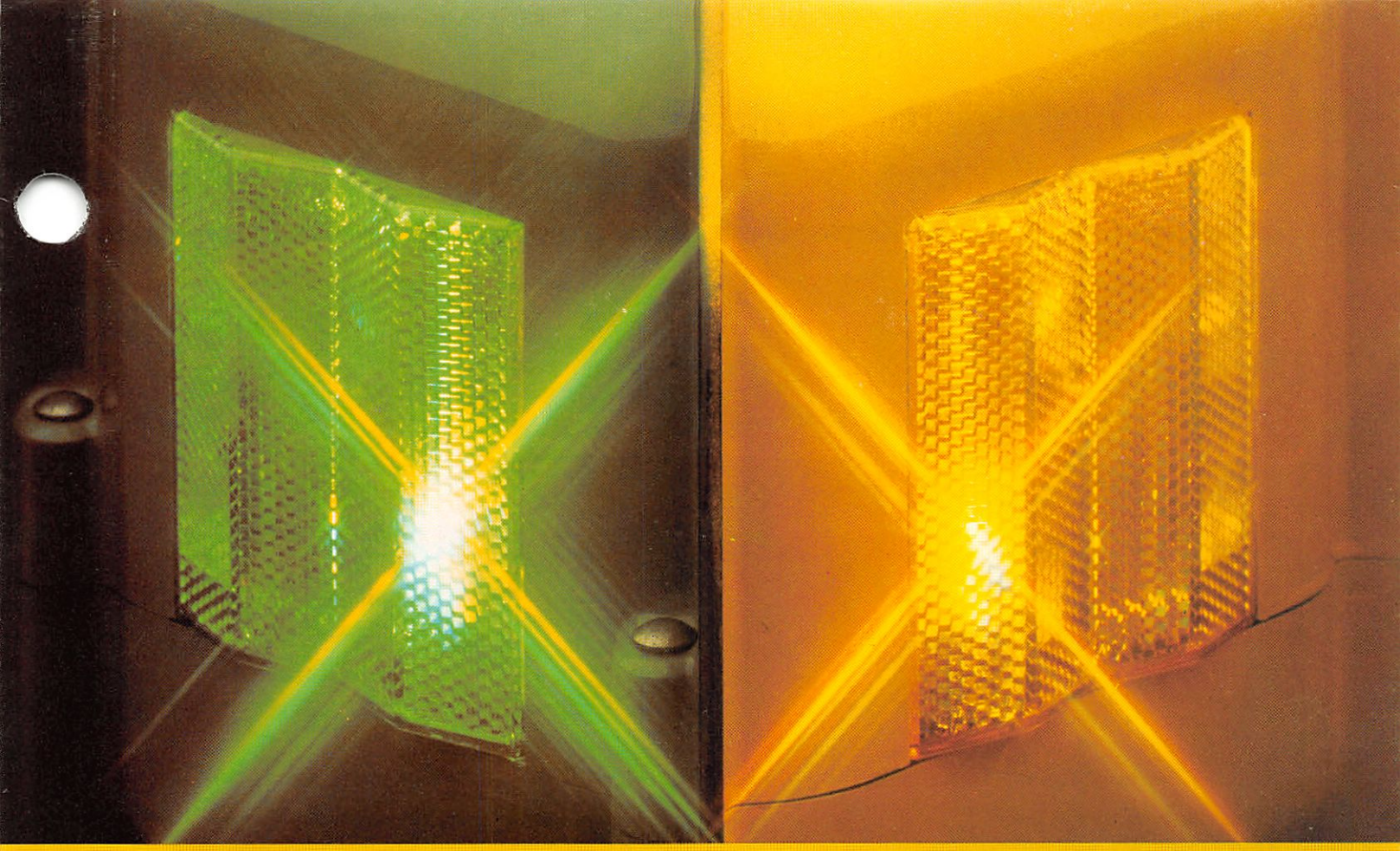

A complete line of reliable, low-cost, high-intensity

Electric Switch Lamps

WESTERN-CULLEN DIVISION
Federal Signal Corporation

Three high-visibility models, built for a lifetime

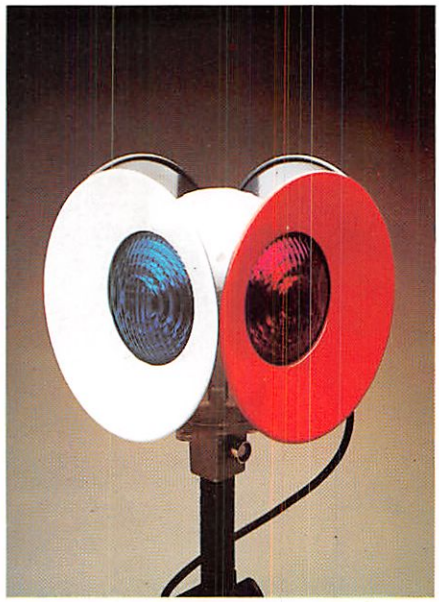

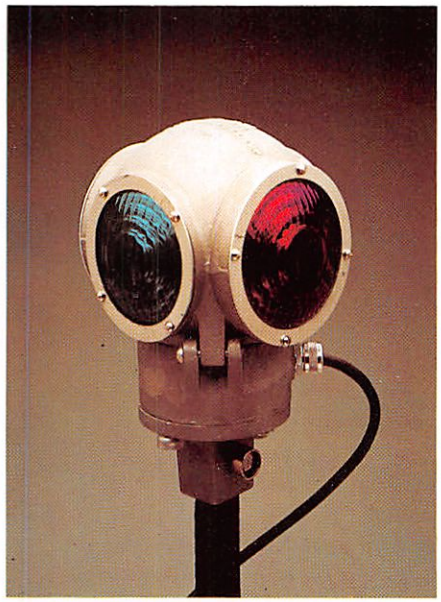

Provide brilliant, steady light

Allow safer yard operation with independent source of light for switch position indication

Increase night operating efficiencies

No flammable fuels to handle, no open flame

Reduce maintenance costs 50% over oil burning type

Theft-proof design

For both battery and commercial current

A bright idea that improves system safety records.

Western-Cullen Switch Lamps project a bright light straight down the right-of-way for maximum visibility.

And these Western-Cullen safety products will pay for themselves in two years' time by reducing your weekly operating and maintenance costs—significantly.

Consider the added security a train crew feels looking up a ladder track and determining switch position before a locomotive headlight beam hits a reflector—only target. You save time and *money* when a lighted indication is provided.

You have a choice of lamps made from two low-maintenance materials: virtually indestructable polycarbonate (Lexan®) plastic and durable, light-weight aluminum.

No fire hazards.

They completely eliminate the hazard of handling or storing flammable fuels, or the danger of open flames at each switch stand.

Plan now to provide your train crews with electric light switch position indicators. Western-Cullen is the brand to specify.

Aluminum models offer many variations to meet specific needs : Types 1870 & 1880

Low-maintenance, cast aluminum switch lamps are configured to satisfy all operating requirements.

Can be furnished to fit any lamp tip—specify dimensions with order.

Many lenses available—see chart below. Type 1870 provides "normal" and "reverse" lenses of different sizes to guard against error during maintenance. With type 1880 all lens openings are of equal size.

Choice of light bulb sockets—single contact bayonet base or medium screw base bulbs.

Can be furnished with or without targets.

Targets available in several colors—red, green, yellow, white, purple.

Glass Lenses

Lamp Type	Lens Description	Color
1880	5⅜" Dia., 30° Horiz. Spread, 10° Up. Deflection	red, green, lunar white, yellow
1870	4⅛" Dia., 5° Horiz. Spread, 2½° Vert. Spread, 10° Up. Deflection	green, lunar white
1870	4½" Dia., 30° Horiz. Spread	red, green, yellow
1870	4½" Dia., 5° Horiz. Spread, 2½° Vert. Spread, 10° Up. Deflection	red, yellow, lunar white

Plastic Lenses—resist breakage

Lamp Type	Lens Description	Color
1880	5⅜" Dia., 30° Horiz. Spread, 10° Up Deflection	red, green yellow, purple
1870	4½" Dia., with reflective outer ring	red and yellow
1870	4⅛" Dia., with reflective outer ring	green

How to order

Specify type of switch lamp desired and indicate options preferred (as itemized above). Also indicate whether or not light bulbs are to be furnished with lamps.

Package systems available simplify the material acquisition process

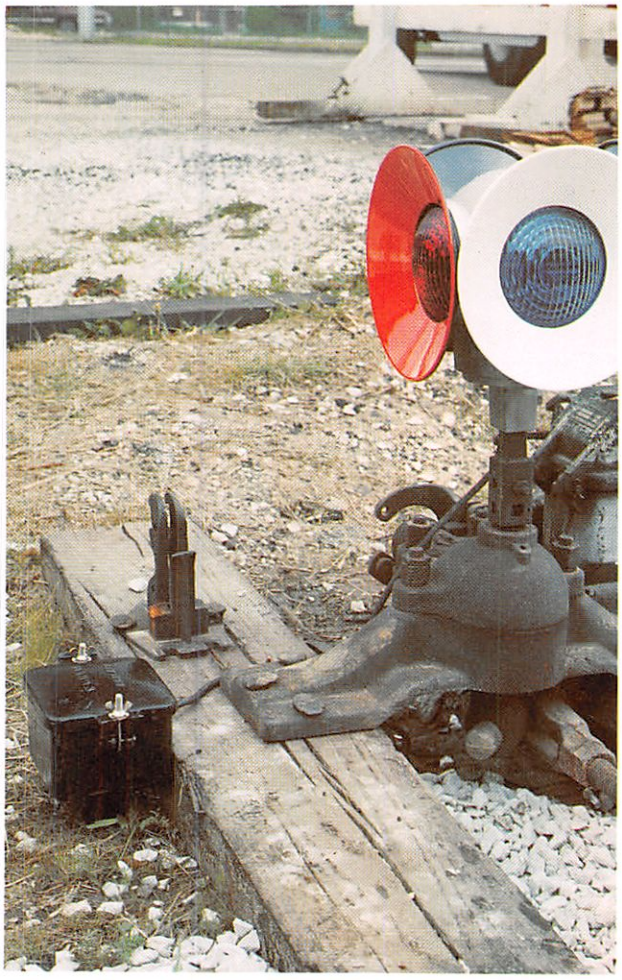

Package No. 1—For primary battery operation

Package No. 1 is complete with:

One Western-Cullen Electric Switch Lamp (specify type of lamp, lens and target colors, lamp tip dimensions, etc.).

One No. 1245A-40P "Everlast" Battery Box to accommodate Edison Type ST Carbonaire battery, or equal (if battery is to be supplied, please so specify).

4 to 15 feet of 2-conductor neoprene covered cable (as specified).

Three cable clamps (for securing cable to switch stand staff).

Package No. 2—For commercial current operation

Package No. 2 is complete with:

One Western-Cullen Electric Switch Lamp (specify type lamp, lens and target colors, lamp tip dimensions, etc.).

One Type 1183-50 Underground Cable Terminal complete with voltage step-down transformer. Transformer will operate 10 volt, 0.3 ampere lamps from 115-volt, 60 cycle source. One transformer will handle up to four Switch Lamps.

4 to 15 feet of 2-conductor neoprene covered cable (as specified).

Three Cable Clamps (for securing cable to switch stand staff).

When ordering

The above packages can be supplied with any of the Switch Lamps featured in this brochure.

Please furnish the information identified as necessary when specifying your particular choice of Switch Lamps.

New "Fail-Safe" model is both a lamp and a reflectorized target

Designed for high visibility—night and day—the new Western-Cullen "Fail-Safe" model has already established a record of reliable performance.

It functions as an Electrified Lamp with fast, convenient bulb replacement, and as a "Fail-Safe" Reflectorized Target, should the bulb burn out.

An exclusive (U.S. Patent No. 3,458,245) "M" shaped lens doubles as a wide angle reflector, providing the "Fail-Safe" indication.

Unique "Cocked Switch" design

They also offer another unique Western-Cullen feature—a special indicator which signals DANGER: COCKED SWITCH! in addition to the traditional normal and reverse indications. Due to the shape of the lens, a double-color indication is displayed to the train crew if the switch point is gapping.

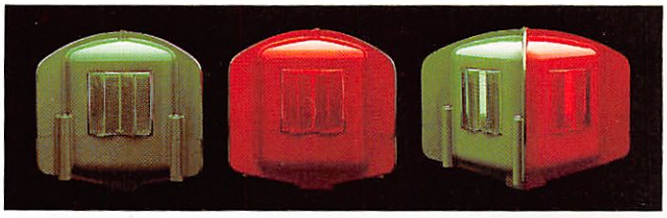

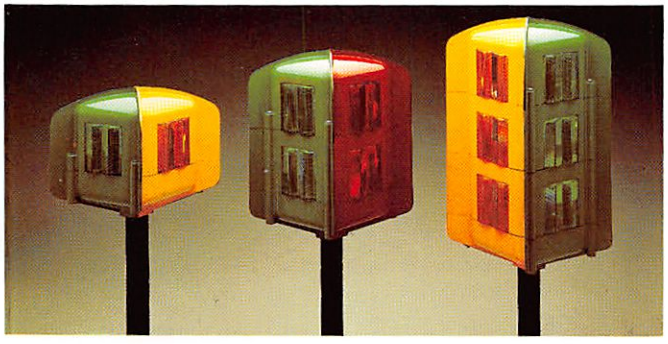

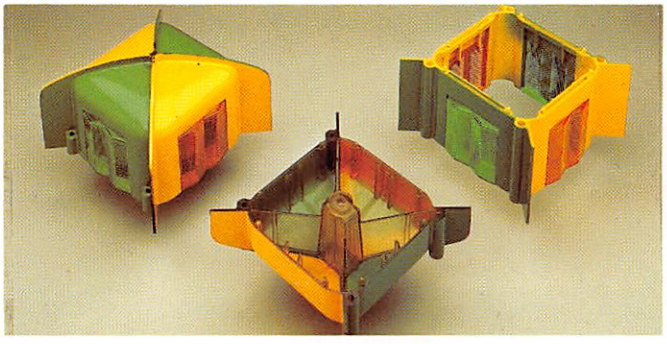

Modular construction

This Western-Cullen Electric Switch Lamp is modular in design to permit you to convert single units, ample for yards, into double or triple units for yard outer limits or main line uses.

All you have to do is insert one or two center modules. A fast, simple job.

Virtually indestructible

It's virtually indestructible, too. Every part of this W-C Electric Switch Lamp housing is made of tough, high-impact poly-carbonate (Lexan®). Theft is discouraged with internal mounting to the lamp tip.

Lenses are impregnated with a special release agent that tends to make them self-cleaning. An ultra-violet inhibitor permits us to guarantee the lens colors for five years. Housings are colored with a special "paint" that becomes part of the casing itself, preventing chipping and the need to re-paint.

Additional features

Designed to fit A.R.E.A. Lamp Tip Standard 251-64. Tip adapter kits or instructions are available to convert other lamp tips. Equipped with a standard single contact bayonet base light socket and cable entrance fitting.

Housings and lenses are available in five colors: red, blue, yellow, white and green.

How to order

Western-Cullen Switch Lamps are furnished as follows:

Item	Ordering Reference
Single Unit	38-0080-4
Double Unit	38-0080-5
Triple Unit	38-0080-6

Single and double units furnished in standard packages of ten, triple units in standard packages of five. Specify colors of housing and colors of lenses. List "thru" or "normal" switch position colors first. Light bulbs are not furnished. For lamp tips smaller than A.R.E.A. Standard 251-64, adapter kits are available.

Item	Ordering Reference
One Tip Adapter Kit	38-0080-19
10 Tip Adapter Package	38-0080-20

The "Everlast" battery box

Type 1245-A-40P "Everlast" Battery Box

Durable enough to be impervious to chemical attack, rugged enough to withstand ballast damage, the "Everlast" Battery Box sheds spray, sleet, rain and snow.

Yet it's efficient design assures adequate ventilation.

Made of durable reinforced fiberglass, it has two pre-formed ridges in the base of the box which eliminate the need for a wooden platform.

The cover is held in position by two brass retaining studs, permitting the cover to be completely removed when required. A stainless steel hasp permits locking.

WESTERN-CULLEN DIVISION
Federal Signal Corporation
2700 West 36th Place, Chicago, Illinois 60632

Printed in U.S.A. 6/76

WESTERN-CULLEN-HAYES, Inc.
2700 West 36th Place • Chicago, Illinois 60632 • Telephone: 312/254-9600 • Telex 25-3206

GENERAL OFFICE AND FACTORY - CHICAGO, ILLINOIS
(Order entry-Signal,Communication & M/W Products)

R. L. McDaniel, President
B. Gulick, Vice-President
W. Muehlnickel, Comptroller
J. P. Schaefer, Sales Manager
A. K. McGowan, Regional Sales Manager SW Region
J. I. Matson, Regional Sales Manager SE Region
R. D. Lotto, Regional Sales Manager NW Region
A. Tsudis (PA.) Regional Sales Manager NE Region
L. E. Flinn, Technical Sales Representative M/W-Hayes
A. Biedron, Manager of Engineering Chicago, Il.
CUSTOMER SERVICE - Chicago, Illinois
H. Havinga, Customer Service Mgr. S&C
M. Beard, Customer Service Manager M/W
RICHMOND, INDIANA
(Order Entry - Hayes Track Material)
J. J. Meyer - Vice-President M/W
N. H. Barr, Technical Sales Representative
CUSTOMER SERVICE - Richmond, Indiana
Direct Inquiries: 120 North 3rd St., P. O. Box 756
Richmond, Indiana 47374 (Telephone: (317-962-0526)

****

REGIONAL SALES
Regional Representatives are at your service, generally serving both railroads and industry in the areas indicated below:

NORTHEAST REGION
NH,NJ,NY,PA,RI,VT,WVA,
DC,CT,DE,MA,ME,MD,OH.
A. Tsudis, Regional Manager
Pittsburgh, Pa. 412-795-2277

NORTHWEST REGION
MN,MT,ND,SD,MI,IN,WI,IA
R. D. Lotto, Regional Manager
Chicago, Illinois 312-254-9600

SOUTH LANCASTER,ONTARIO K0C2C0
Woodings Canada Ltd.,P.O.Bx.52
613-347-2485,514-879-1129

Milano, Italy(20121) Europe &
Middle East Sales Office
VIMAC, Vince Caltabiano
Via Borgonuovo,7
02-80-60-74 Telephone

SOUTHWEST REGION
AZ,CA,NV,NM,OR,WA.
J. P. Schaefer, Regional Manager
Chicago, Il. 312-254-9600

CO,ID,UT,WY, ,OK,NB
A. K. McGowan, Regional Manager
Chicago, Il. 312-254-9600

SOUTHEAST REGION
AL,FL,GA,KY,MS,NC,SC,TN,MO,TX,LA,AR.
J. I. Matson, Regional Manager
Chicago, Il. 312-254-9600

Railroads-Mexico, South & Central AM.
American Equipment Co., T.Mabry
150 E. Palmetto Pk. Rd.
Boca Raton, Florida 33432
305-391-8941

CONTENTS

	SECTION
Arresters, Lightning	20
Audio Frequency Overlay	15
Automatic Crossing Gates	3
Model 10	3
Bases, Signal	3
Battery Boxes	1, 2, 3
Bells	5
Bonding Drills - Type 350	7
Bridges, Signal (Consult Factory)	–
Bootlegs	7
Cantilever Crossing Signals	
Stationery Walkout	2
Rotatable Type, Extendable	2
Rotable Type, Fixed	2
Connectors, Parkway Cable	7
Crossing Warning Systems	4
Disconnect & Test Switches	23
Drills, Bonding	7
Flasher Relay	
Model 720 EOR Solid State	15
Model 705 Wayside Flasher	15
Flashing Light Crossing Signals	
A479 (Without Gate Arms)	1
Model 10 (With Gate Arms)	3
Cantilever Type	2
Fuses	23
Gate Arms	3
Wooden, Aluminum, Fiberglass	3
Gate Mechanisms	3
Model 3564 (Replacement Parts – Consult Factory)	–
Model 3566 (Replacement Parts – Consult Factory)	–
Model 3567	3
Model 3568	3
Model 3569 (Consult Factory)	–
Model 3570	3
Model 3590 & Replacement Parts	3
Replacement Parts, 3567, 3568, 3570	3

WESTERN-CULLEN-HAYES, Inc.
2700 West 36th Place • Chicago, Illinois 60632 • Telephone: 312/254-9600 • Telex 25-3206

SECTION

Junction Boxes 6
Lightning Arresters 20
Signal Case Arrester
Light Units 1
Light Units Accessories & Parts 1
Type 970-201 (8" Light Unit) 1
Type 975-201 (12" Light Unit) 1
Light, Gate Arm 3
Meters, Electric Measuring 9
Modulated Tract Circuits 15
No Turn Signals 1
Padlocks 6
Pole Boxes 6
Presence Detector - WC-300 19
Rectifiers, Signal 8
Relays, Model 720 15
Resistance Units 21
Roundels & Bulbs For Light Units 1
Signals 1, 3, 4
Signs 1
Speakerphone, Signalman's 9
Strips, Terminal 22
Switch Lamps 25
Terminal Blocks 22
Terminal Housing 6
Test Equipment 9
Test Switches 23

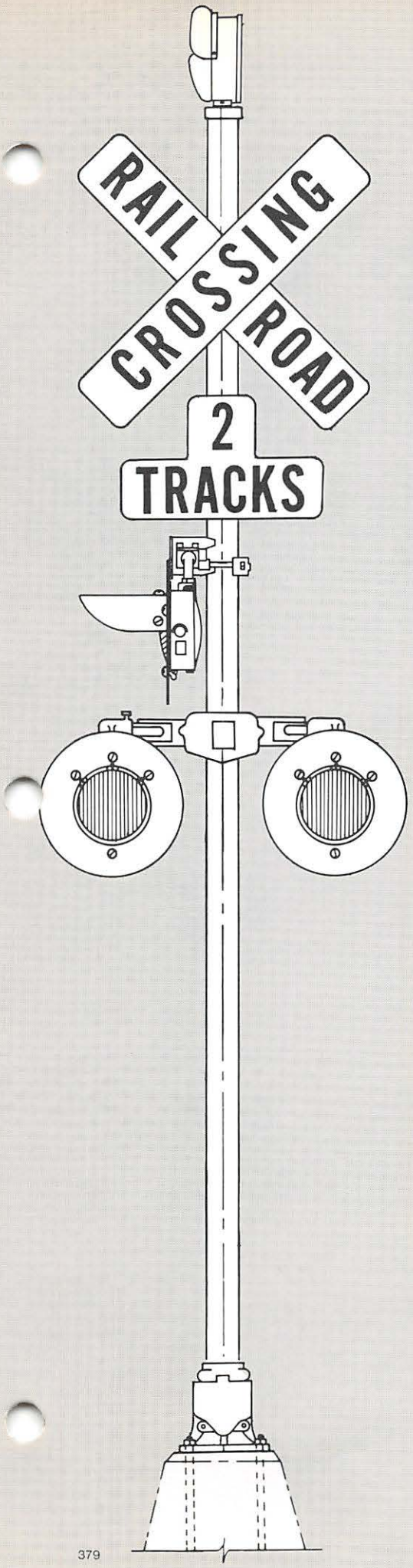

379

FLASHING LIGHT CROSSING SIGNALS

CONTENTS

Page

General Information

- Flashing Light Signals with 8⅜" Dia. Lights . . . . . 1-3 to 1-4
- Flashing Light Signals with 12" Dia. Lights 1-51

Flashing Light Highway Crossing Signals Complete

- Signals with 8⅜" Dia. Lights . . . . . 1-5 to 1-9
- Signals with 12" Dia. Lights . . . . . 1-52 to 1-54

Flashing Light Highway Crossing Signal Parts

- Anchorbolts . . . . . 1-10 & 1-11
- Bases . . . . . 1-12 & 1-13
- Roundels for 8⅜" Lights 1-14
- Roundels for 12" Lights 1-55
- Light Unit, Type 950, 8⅜" (Replacement Parts Only) . . . . . 1-30 to 1-33
- Light Unit, Type 970-201, 8⅜" . . . . . 1-15 to 1-19
- Light Unit, Type 975-201, 12" . . . . . 1-56 & 1-57
- Signs . . . . . 1-20 to 1-25

Marker Lights 1-26

Supporting Brackets 1-27

No Turn Signals . . . . . 1-28 & 1-29

Suggested Foundation Designs 1-34

WESTERN-CULLEN-HAYES, Inc.
2700 West 36th Place • Chicago, Illinois 60632
Telephone: 312/254-9600

Information Desired With Inquiry For Complete Highway Crossing Signal Installation

We are pleased to furnish engineering information and to quote on requirements for Highway Crossing Signal Installations. Where possible, inquiries should be accompanied by a sketch, or preferably, a scale track plan showing the location of the highway.

The following information is especially desired:

1. Is "Railroad Crossing" sign required?*
2. Is number of tracks sign required? If so, advise numeral.*
3. Is "Stop on Red Signal" sign required?**
4. Advise maximum authorized speed of train movement. (A.A.R. recomcomendation is 20 seconds warning for fastest train)
5. What special operating conditions exist within the area?
6. Specify whether there are any switches within the approach section.
7. Specify if there is any signal equipment now in place which might be affected by this installation.
8. Specify whether Diesel-Electric or Electric propulsion railway.
9. What electric power is available for operation of signals? If D.C., specify voltage; if A.C., specify voltage and frequency.
10. Specify whether stand-by electric service is required. (Can continuity of available service be depended upon?)
11. Specify weight and type of rail and whether four or six hole insulated rail joints.
12. Specify if track ballast is rock, gravel, sand, cinders, or other material.
13. State whether highway is paved. Width of highway or travelled portion. Specify class of paving.

*Available in Reflector Unit Type, both synthetic enamel and vitreous enamel finish and in Reflex-Reflecting Sheet Type.

**Not available in vitreous enamel finish.

WESTERN-CULLEN DIVISION
Federal Signal Corporation
2700 WEST 36TH PLACE, CHICAGO, ILLINOIS 60632 (312) 254-9600

Speed Table For Crossing Signal Starts

Seconds		10	15	20	25	30	35	40	45	50	55	60
Miles Per Hour	Feet Per Second	Distance Traveled in Feet										
1	1.46	14.6	22.0	29.3	36.6	44.0	51.3	58.6	66.0	73.3	80.6	88.0
2	2.93	29.3	44.0	58.6	73.3	88.0	102.6	117.3	132.0	146.6	161.3	176.0
3	4.4	44	66	88	110	132	154	176	198	220	242	264
4	5.86	58.6	88	117.3	146.6	176	205.3	334.6	264	293.3	322.6	352
5	7.3	73	110	147	183	220	257	293	330	367	403	440
10	14.6	146	220	293	366	440	513	587	660	733	807	880
15	22.0	220	330	440	550	660	770	880	990	1,100	1,210	1,320
20	29.3	293	440	587	733	880	1,027	1,173	1,320	1,467	1,613	1,760
25	36.7	367	550	733	917	1,100	1,283	1,467	1,650	1,833	2,017	2,200
30	44.0	440	660	880	1,100	1,320	1,540	1,760	1,980	2,200	2,420	2,640
35	51.3	513	770	1,027	1,283	1,540	1,797	2,053	2,310	2,567	2,823	3,080
40	58.7	587	880	1,173	1,467	1,760	2,053	2,347	2,640	2,933	3,227	3,520
45	66.0	660	990	1,320	1,650	1,980	2,310	2,640	2,970	3,300	3,630	3,960
50	73.3	733	1,100	1,467	1,833	2,200	2,567	2,933	3,300	3,667	4,033	4,400
55	80.7	807	1,210	1,613	2,017	2,420	2,823	3,227	3,630	4,033	4,437	4,840
60	88.0	880	1,320	1,760	2,200	2,640	3,080	3,520	3,960	4,400	4,840	5,280
65	95.3	953	1,430	1,907	2,383	2,860	3,337	3,813	4,290	4,767	5,243	5,720
70	102.7	1,027	1,540	2,053	2,567	3,080	3,593	4,107	4,620	5,133	5,647	6,160
75	110.0	1,100	1,650	2,200	2,750	3,300	3,850	4,400	4,590	5,500	6,056	6,600
80	117.3	1,173	1,760	2,347	2,933	3,520	4,107	4,693	5,280	5,867	6,453	7,040
85	124.7	1,247	1,870	2,493	3,117	3,740	4,363	4,987	5,610	6,233	6,858	7,480
90	132.0	1,320	1,980	2,640	3,300	3,960	4,620	5,280	5,940	6,600	7,260	7,920
95	139.3	1,393	2,090	2,787	3,483	4,180	4,877	5,573	6,270	6,967	7,663	8,360
100	146.7	1,467	2,200	2,933	3,667	4,400	5,133	5,867	6,600	7,333	8,067	8,800
105	154.0	1,540	2,310	3,080	3,850	4,620	5,390	6,160	6,930	7,700	8,470	9,240
110	161.3	1,613	2,420	3,227	4,033	4,840	5,647	6,453	7,260	8,067	8,873	9,680
115	168.6	1,686	2,530	3,373	4,217	5,060	5,903	6,747	7,590	8,434	9,277	10,120
120	176.0	1,760	2,640	3,520	4,400	5,280	6,160	7,040	7,920	8,800	9,680	10,560
125	183.3	1,833	2,750	3,667	4,583	5,500	6,417	7,334	8,250	9,167	10,084	11,000
130	190.7	1,907	2,860	3,813	4,767	5,720	6,573	7,627	8,580	9,534	10,487	11,440

NOTE: Where length of track circuit is known, time in seconds can be determined by dividing its length by "Feet Per Second" at train speed selected.

* Does not allow for drop-away time of relays.

Type A-479-A
Flashing Light Highway Crossing Signal with Type 970-201 Light Units

ALL ALUMINUM

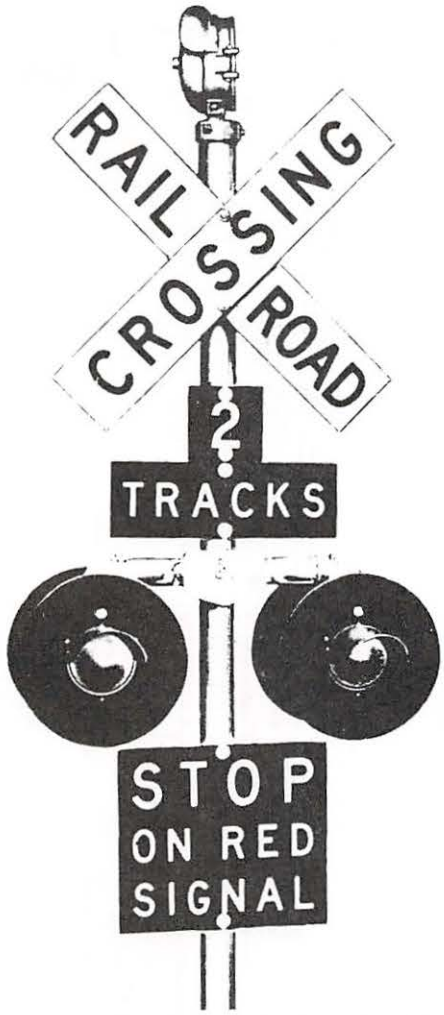

GENERAL INFORMATION

The Flashing Light Highway Crossing Signals manufactured by Western-Cullen Division represent the latest improvements in design. They meet all A.A.R. Specifications.

This catalog illustrates the most popular arrangements of flashing light signals and accessories, such as junction box-crossarm with two or four flashing light units for one-way or two-way indication. Other arrangements can be furnished to meet particular requirements.

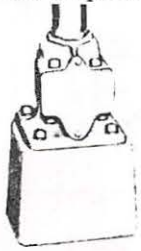

Type A-479-A
Flashing Light Highway Crossing Signal with Type 970-201 Light Units

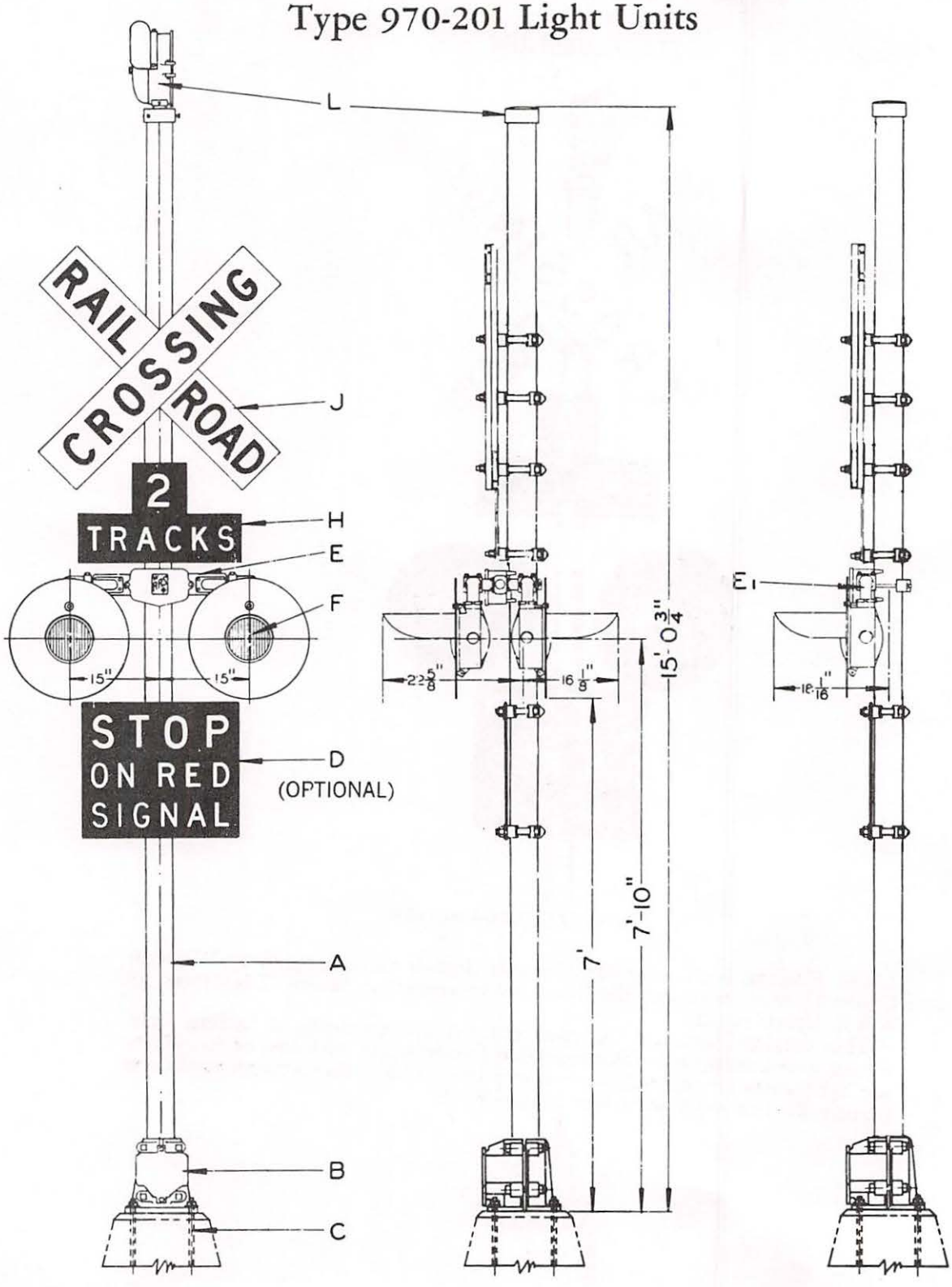

Ref. A Ref. A1 Ref. B1

Type A-479-A
Flashing Light Highway Crossing Signal with Type 970-201 Light Units

By far the majority of Flashing Light Type Highway Crossing Signal installations require two Flashing Light signals, two-way indication; one with a bell and one with a pinnacle, although, frequently two bells are used. Western's A-479A all-aluminum assembly with 4" I.D. mast, junction box type base having 9½"x9½" anchor bolt spacing and reflex-reflecting sheet type signs on extruded or sheet aluminum, meet most requirements. Type 222CR Crossing Bell is usually required, but Type 1275CR Pedestrian Crossing Bell will be supplied when specified. Plastic roundels having 30° horizontal spread and 15° down deflection are furnished as standard. For other Roundels see Page 1-14.

Below are ordering references for these most frequently used assemblies. See Page 1-10 for information for ordering variations from these assemblies.

If "Stop-On-Red Signal" sign is required it must be specified.

Ref.	Description	Piece No.
A	Flashing light Highway Crossing Signal complete; two-way indication, with 222CR Bell. (specify numeral on track sign and voltage and wattage of lamp bulbs, if required)	A479AB
A1	Same as Ref. A, but with pinnacle in place of bell	A479AP
B	Flashing Light Highway Crossing Signal complete; one-way indication, with 222CR Bell. (specify numeral on track sign and voltage and wattage of lamp bulbs, if required)	A479AB-1
B1	Same as Ref. B, but with pinnacle in place of bell	A479AP-1

Type A-479-A
Flashing Light Highway Crossing Signal with Type 970-201 Light Units

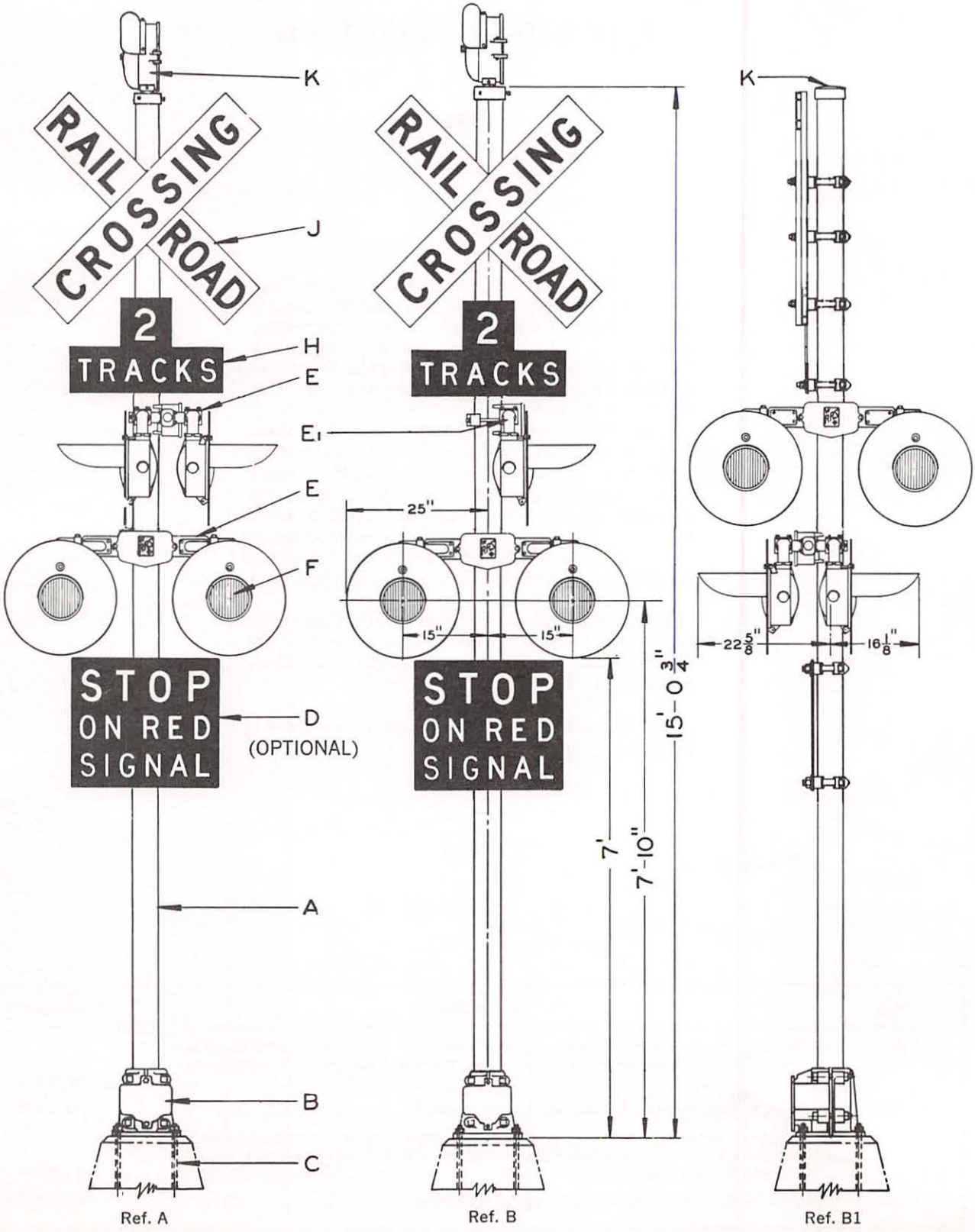

Type A-479-A
Flashing Light Highway Crossing Signal with Type 970-201 Light Units

Many locations require Flashing Light Highway Crossing Signals having extra light assemblies to provide indication to traffic on streets or highways paralleling the railroad, or on curved approaches, in addition to the Flashing Lights that provide the indication to traffic on the street or highway that crosses the tracks.

Generally these extra lights are mounted 90° to the right of and above the main lights, as illustrated.

The extra lights can be mounted at any angle which may be specified, or even on special brackets as shown on Page 1-27. Given the requirements we will be pleased to submit drawings of assemblies required.

These commonly used assemblies, with extra lights, are usually Western's all-aluminum A479A type with 4" I.D. mast, junction box type base having 9½" x 9½" anchor bolt spacing and reflex-reflecting sheet type signs on extruded or sheet aluminum. One signal with 222CR bell and one with pinnacle are normally required at each crossing, but the Type 1275CR bell will be supplied when specified. Plastic roundels having 30° horizontal spread and 15° down deflection are furnished as standard. For other Roundels see Page 1-14.

Below are ordering references for the assemblies illustrated on the opposite page. See Page 1-10 for information for ordering variations from these assemblies.

If "Stop-On-Red Signal" sign is required it must be specified.

Ref.	Description	Piece No.
A	Flashing Light Highway Crossing Signal complete; two-way indication main lights, two-way indication extra lights mounted 90° to the right and 222CR Bell. (specify numeral on track sign and voltage and wattage of lamp bulbs)	A479AB-8
A1	Same as Ref. A, but with pinnacle in place of bell	A479AP-8
B	Flashing Light Highway Crossing Signal complete; two-way indication main lights, with one-way indication extra lights mounted 90° to the right and 222CR Bell. (specify numeral on track sign and voltage and wattage of lamp bulbs)	A479AB-6
B1	Same as Ref. B but with Pinnacle in place of bell	A479AP-6

Parts for Type A-479-A Flashing Light Highway Crossing Signal with Type 970-201 Light Units

When ordering assemblies other than are shown on Pages 1-6 to 1-9 please use the reference data below, enumerating components required.

If extra light assemblies are called for, specify degree of angle to right or left of main lights.

We will gladly furnish plans and information for special assemblies, including supporting brackets as shown on Page 1-27, Marker Lights on Page 1-26, etc.

Ref.	Description
1	Type A479-A Aluminum Flashing Light Highway Crossing Signal with the following equipment.
A	Pipe Mast (See Page 1-11)
B	Base (See Page 1-13)
C	Anchor Bolts (See Page 1-11)
D	"Stop on Red Signal" sign (See Page 1-21)
E	Flashing Light Assembly (See Page 1-15)
F	Roundels (See Page 1-3 or 1-14)
G	Specify voltage and wattage of lamps
H	"Tracks" sign (See Page 1-23)
J	"Railroad Crossing" sign (See Page 1-25)
K	Bells (See Section 5)
L	Pinnacle (See Page 1-11)

Parts for Type A-479-A
Flashing Light Highway Crossing Signals

PIPE MAST

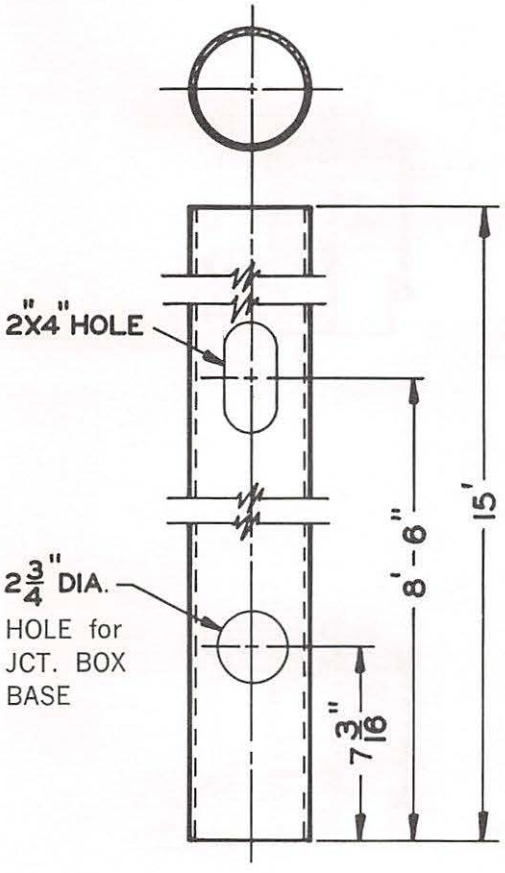

Ref. A

PINNACLE

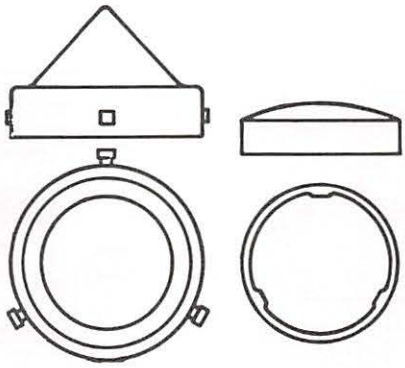

Ref. K1 Ref. K

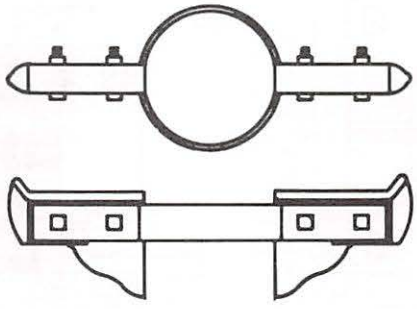

Ref. L

ANCHOR BOLTS

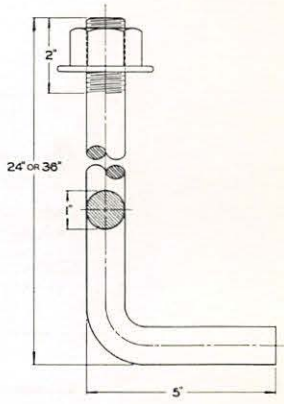

Ref. C & C1

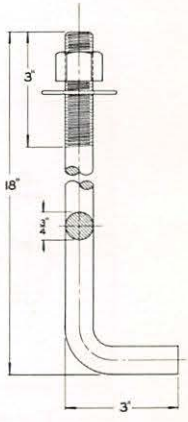

Ref. C2

Ref.	Description	Piece No.
A	Pipe Mast. 4" I.D. x 15' long, drilled for Jct. Box Base	714-50U-2
A1	Pipe Mast, 4" I.D. x 15' long	714-50-1
A2	Pipe Mast, 5" I.D. x 15' long, drilled for Jct. Box Base	715-50U-2
A3	Pipe Mast, 5" I.D. x 15' long	715-50-1
C	Type 11079 Anchor Bolt 1" x 36" lg. complete with washer and hex. nut (galvanized)	11079
C1	Same as Ref. C, but 24" lg	11079-1
C2	Type 2144 Anchor Bolt ¾" x 18" lg	2144-18
K	Type 110A Pinnacle for 4" I.D. pipe post	110A-6
K1	Type 110A Pinnacle for 5" I.D. pipe post	110-A 8
L	Pole Step complete for 4" I.D. pipe post	10151
L1	Same as Ref. L. but for 5" I.D. pipe post	10152

Type A-479-A
Flashing Light Highway Crossing Signals
Clamp Type Bases

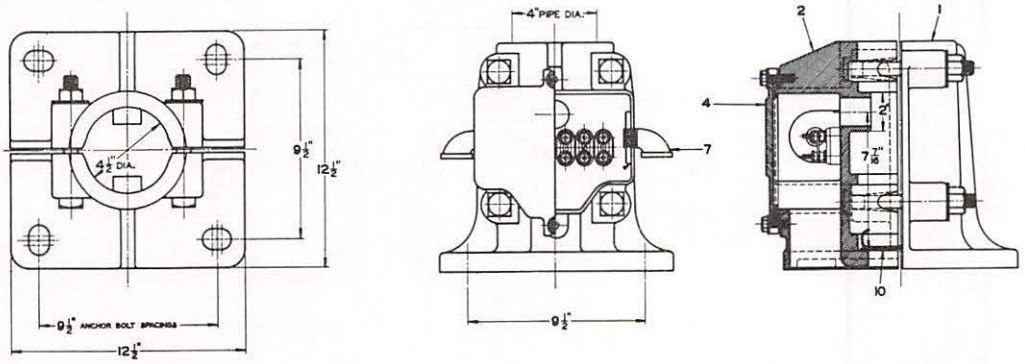

Ref. B & B3

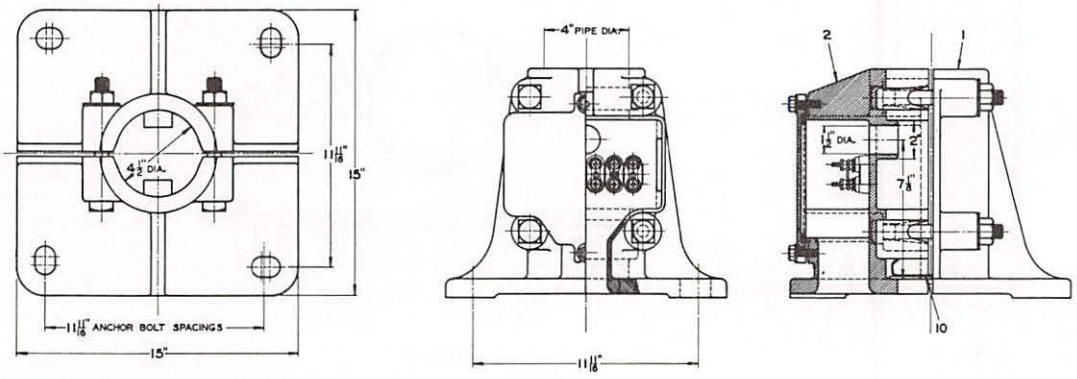

Ref. B1 & B5

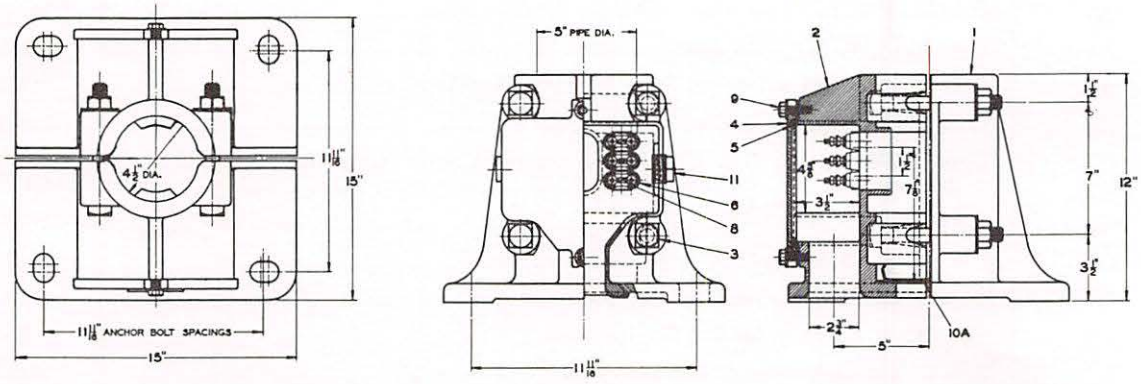

Ref. B6 & B7

Parts for Type A-479-A
Flashing Light Highway Crossing Signals
Clamp Type Bases

These clamp type signal bases are available as plain split bases or with one or both halves having a cast-in junction box capable of holding a bakelite terminal strip of 6 units (12 binding posts). The base may be furnished complete or the half with the junction box may be obtained separately for use with signal assemblies already installed.

Ref.	Description	Piece No.
B	Type 14492 Plain Split Base Assembly, for 4" I.D. pipe, with 9½" x 9½" anchor bolt spacing. Cast Aluminum	14492A
B1	Type 2143 Plain Split Base Assembly, for 4" I.D. pipe, with 11-11/16" x 11-11/16" anchor bolt spacing. Cast Aluminum	2143A
B2	Type 2145 Plain Split Base Assembly, for 5" I.D. pipe with 11-11/16" x 11-11/16" anchor bolt spacing. Cast Iron	2145
B3	Type 2146 Split Base Assembly with junction box on one half and six terminals, for 4" I.D. pipe, with 9½" x 9½" anchor bolt spacing. Cast Aluminum.	2146A-11
B4	Same as Ref. B3 but junction box on both halves	2146A-12
B5	Type 2147 Split Base Assembly with junction box on one half and six terminals, for 4" I.D. pipe, with 11-11/16" x 11-11/16" anchor bolt spacing. Cast Aluminum.	2147A-11
B6	Same as Ref. B5 but junction box on both halves	2147A-12
B7	Type 2148 Split Base Assembly with junction box on one half and six terminals, for 5" I.D. pipe, with 11-11/16" x 11-11/16" anchor bolt spacing. Cast Iron.	2148-11
B8	Same as Ref. B7, but junction box on both halves	2148-12
	REPLACEMENT PARTS	
1	Plain Half Base Casting for ref. B (cast aluminum)	1449A-1
1A	Plain Half Base Casting for ref. B1 (cast aluminum)	2143A-1
1B	Plain Half Base Casting for ref. B2 (cast iron)	2145-1
2	Junction Box Half Casting for ref. B3 & B4 (cast aluminum)	2146A-15C
2A	Junction Box Half Casting for ref. B5 & B6 (cast aluminum)	2147A-15A
2B	Junction Box Half Casting for ref. B7 & B8 (cast iron)	2148-15
3	¾" x 6½" lg. mach. bolt with sq. hd. and hex. nut	
4	Cover (cast iron)	2148-16
4A	Cover (cast aluminum)	2148A-16
5	Flax packing 5/16" sq. x 29" lg	
6	Terminal strip (12 post)	2506-112
6A	Terminal strip for ref. B7 & B8 only (6 post)	2506-106
7	Ventilator	1143-16
8	No. 10-32 x ⅝" lg. rd. hd. mach. screw	
9	⅜"—16 x 1¼" lg. hex. cap screw and plain washer	
10	Pipe shield	2147-24
10A	Pipe shield for ref. B7 & B8 only	2149-24
11	Pipe Plug, 1¼"	

Parts for Type A-479-A
Flashing Light Highway Crossing Signals
Roundels

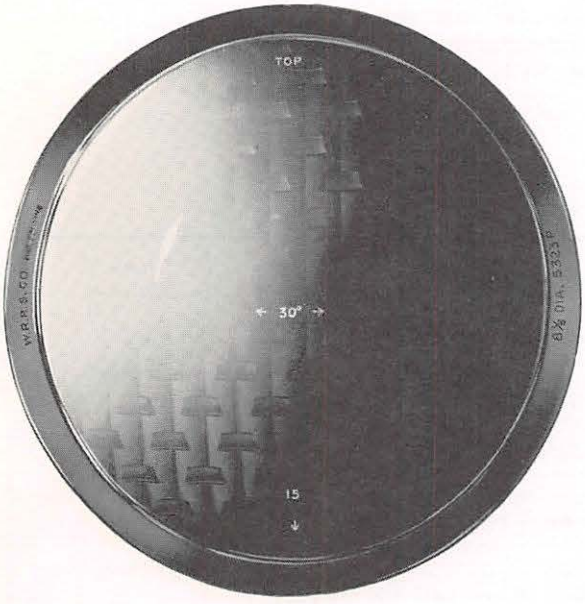

Ref. F4

Roundels furnished are A.A.R. Standard 8⅜" diameter, Red, with photometric rating for color of 220-300. No. 5323 and 5323P Roundels are recommended by the A.A.R. Signal Section, for general use.

Types CL-17P, 5323P and 5357 are plastic.

Ref.		Piece No.
F	Type CL-17 Roundel, 30° horizontal spread, glass	CL-17
F1	Type CL-17 Roundel, 30° horizontal spread, plastic	CL-17RP
F2	Type 5323 Roundel, 30° horizontal with 15° downward deflection, glass	5323
F3	Type 5323P Roundel, 30° horizontal with 15° downward deflection, plastic	5323P
F4	Type 5327 Roundel, 20° horizontal with 32° downward deflection, glass	5327
F5	Type 5332 Roundel, 70° horizontal, glass	5332
F6	Type 5357 Roundel, long range 20° (15°-5°) horizontal deflecting, 10° vertical spread	5357

WESTERN-CULLEN DIVISION
FEDERAL SIGN & SIGNAL CORPORATION

WC LONG RANGE HOT SPOT ROUNDELS

For highway crossing signals

- **Provide a dramatic increase in brightness**
- **Provide maximum efficiency in light distribution and control**
- **Resist damage from vandals**
- **Comply with applicable A.A.R. standards.**

Western-Cullen Long range, High Intensity Hot Spot Roundels offer unique characteristics that provide precise optical control of light distribution. Maximum signal brightness is concentrated in the area traveled by approaching motorists. Less light is wasted.
Prisms in the roundel determine the direction of the light; the number and size of prisms determine the percent of light deflected. Dramatic increases in optical efficiency have been achieved in these Roundels.
W-C Hot Spot Roundels are made from LEXAN†... a polycarbonate plastic. Special inhibitors in the plastic protect the roundel from deterioration from ultraviolet light. LEXAN† surpasses glass, butyrate and acrylic plastic in impact resistance. Color is uniformly distributed throughout the roundel. Coloring conforms to A.A.R., Signal Section 136, Highway Crossing Red.

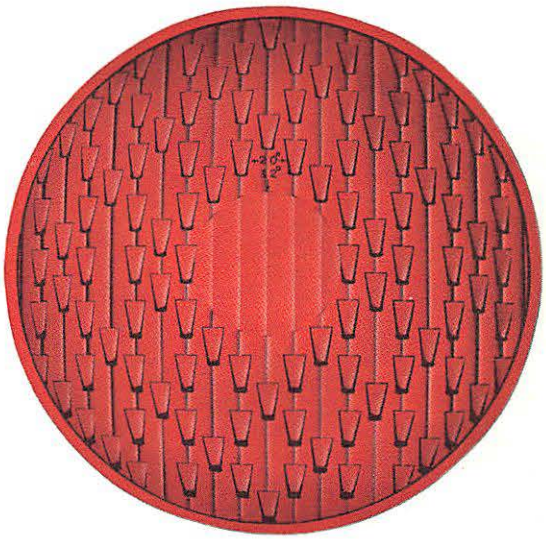

No. 5367, 20° x 32° Long Range, High Intensity Hot Spot Roundel
This W-C Roundel is designed for use on cantilevers and signal bridges. It has a 20° horizontal spread. Vertical deflection is 32° downward with a 2″ hot spot. Standard size is 8⅜″ in diameter to fit any standard highway crossing signal. Optimum brightness is assured from 25 feet to 1,000 feet, in advance of the signal, independent tests* show 120% improvement over other styles of roundels.

W-C 5367 Roundel provides superior performance when used with Cantilevers or other overhead signal structures.

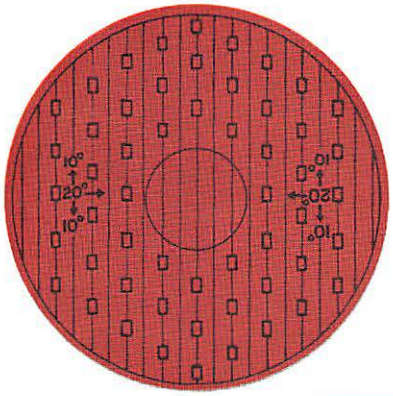

No. 5357, 20° x 10° Long Range, High Intensity Hot Spot Roundel
This W-C Roundel is designed for roadside signals. It has a 10° vertical spread at 0° horizontally and graduates to a 20° vertical spread at 15° horizontally to the traffic side (with the exception of the hot spot itself). The horizontal spread is 20°, 15° to the traffic side of the signal and 5° to the field, providing maximum brightness in the traffic lane. Optical symmetry design allows the roundel to be rotated 180° for signals located to the left of traffic with the same outstanding results.

† TM of General Electric Company

ORDERING REFERENCE

Ref. No.	Description	Piece No.
1	**Type 5357 Hot-Spot Roundel,** 20° horizontal deflection in one direction (which is reversible) with 10° vertical spread at the center, 20° spread at one side with 2″ Hot-Spot, plastic, standard 8⅜″ diameter, red.	5357
2	**Type 5367 Long Range Hot-Spot Roundel,** 20° horizontal spread with 32° vertical deflection with 2″ Hot-Spot, plastic, standard 8⅜″ diameter, red.	5367

*Comparison tests of peak candle power at 1000 feet performed by leading independent light testing laboratory. Test details upon request.

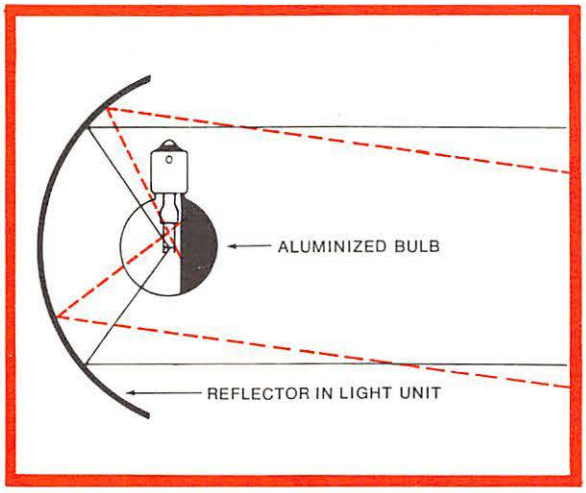

WC RB-400
REFLECTORIZED BULB

Crossings are made safer with the RB-400 Reflectorized Bulb which provides up to 4 times the brightness of conventional bulbs with no increase in power consumption

The design concept is simple but highly effective with bulb shape and filament placement rigidly controlled. A reflectorized coating is applied inside the glass envelope. Light that is lost in conventional bulb design is collected and used to provide a second beam of light. The reflectorized area collects unused light emitted in the forward direction and redirects it to the reflector in the flashing light housing. Thus, redirected light is reflected outward at a slightly lower angle than the main beam. This second beam provides additional light in the critical area close to the signal making crossings safer. The RB-400 produces nearly twice the light and 4 times the brightness of any conventional bulb. Bulb life is much longer due to rigid quality control. A.A.R. requirements for lamp life are exceeded.

The RB-400 has a G12½ envelope, single contact base, CC6 filament, 1¼" LCL. Available in 10 volt 18 watts. Packaged 10 bulbs to a carton.

Ordering Reference

Description	Piece No.
W-C RB-400 Reflectorized Bulb	90841

WESTERN-CULLEN DIVISION
FEDERAL SIGN & SIGNAL CORPORATION
"THE FUTURISTS"
2700 West 36th Place • Chicago, Illinois 60632

Parts for Type A-479-A Flashing Light Highway Crossing Signal with Type 960 Crossarm and Type 970-201 Light Units

CAST ALUMINUM CROSSARM, BRACKETS AND ELBOWS SHEET ALUMINUM BACKGROUNDS AND HOODS

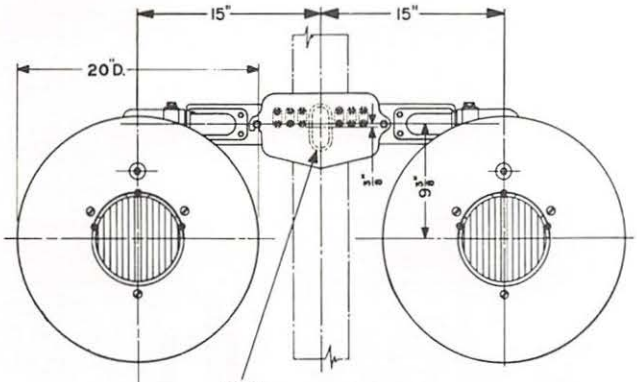

FLASHING LIGHT SIGNAL-TWO WAY INDICATION
TYPE NO. 970-204

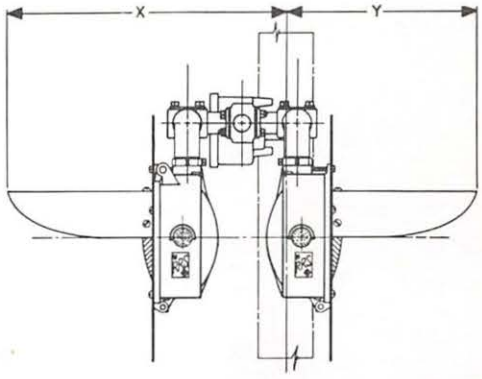

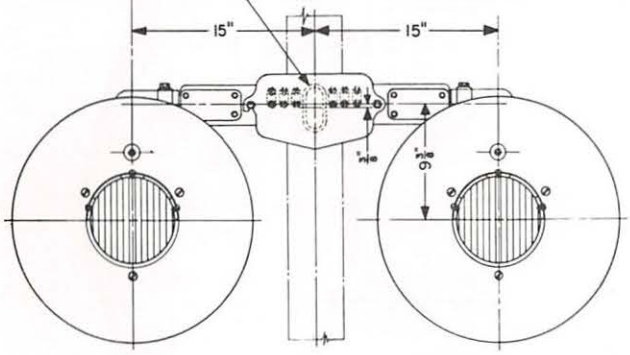

FLASHING LIGHT SIGNAL-ONE WAY INDICATION
TYPE NO. 970-202

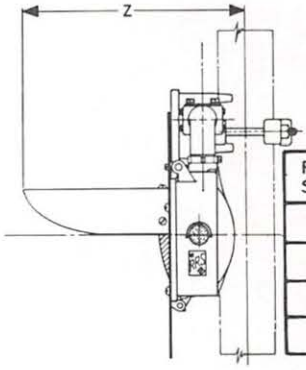

PIPE SIZE	DIM. X	DIM. Y	DIM. Z
4" I.D.	22 5/8"	16 1/8"	18 1/16"
5" I.D.	23 5/16"	15 7/16"	18 3/4"
6" I.D.	23 15/16"	14 13/16"	19 3/8"
8" I.D.	25 1/8"	13 5/8"	20 9/16"

Type 970-201 Light Units are equipped with Parabolic glass reflectors, 8⅜" diameter red roundels and single contact, bayonet base, receptacles positioned to accommodate S-8 or S-11 lamp bulb, having 1¼" light center length.

Ref.	Description	Piece No.
E	Type 970 Flashing Light Unit Assembly with Type 960 junction box crossarm for two-way indication with 4 light units. (specify I.D. of pipe and roundels)	970-204
E1	Same as Ref. E but one-way indication with 2 light units	970-202
E2	Type 970 Light Unit only (specify Roundel)	970-201
E3	Type 960 Junction Box Crossarm for two-way indication. (specify I.D. of pipe)	960-5
E4	Same as Ref. E3 but for one-way indication	960-3

For replacement parts see page 1-17 and 1-19.

Parts for Type A-479-A
Flashing Light Highway Crossing Signal
Type 970-201 Light Unit

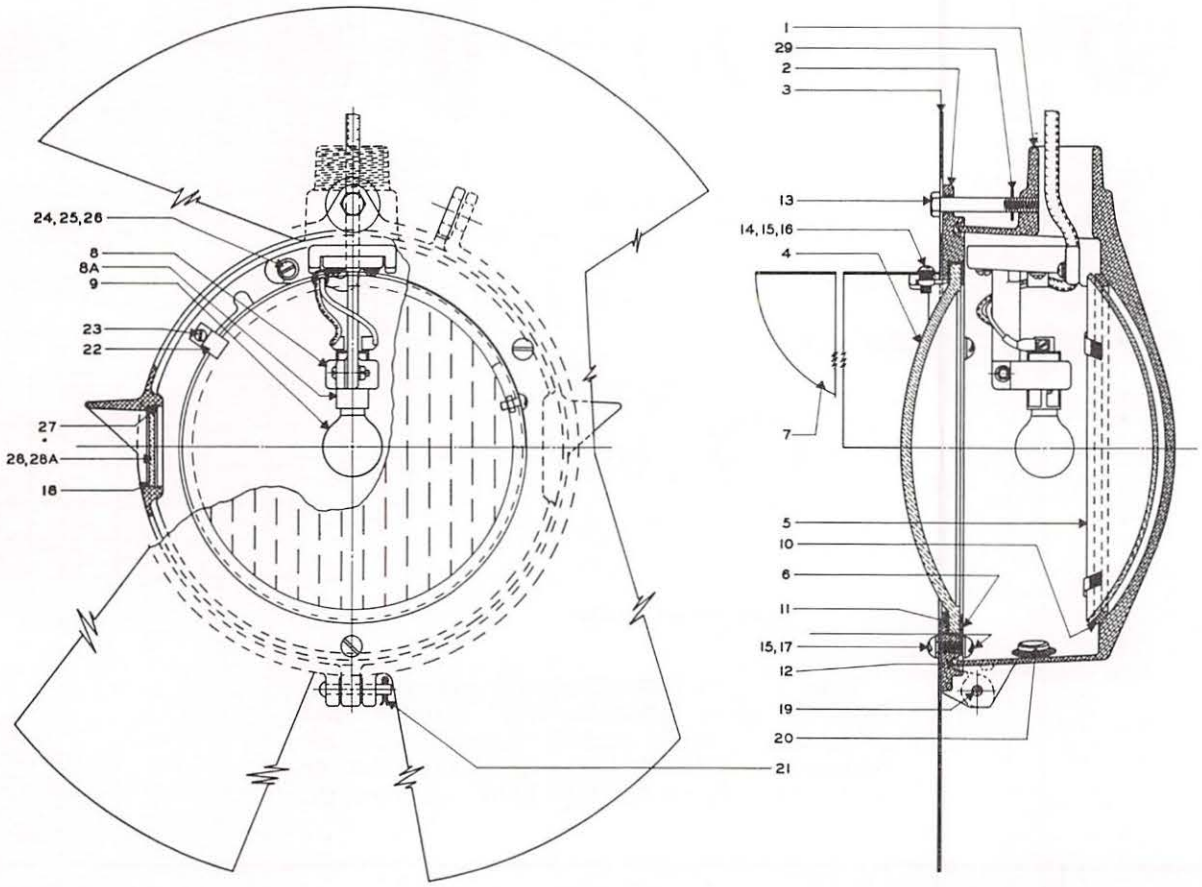

Ref. A

Parts for Type A-479-A Flashing Light Highway Crossing Signal Type 970-201 Light Unit

All castings in the Type 970-201 Light Unit are aluminum, with sheet aluminum hood and background.

Ref. No.	Description	Piece No.
A	Type 970 Flashing Light Unit assembly, specify roundel desired and voltage and wattage of lamp, if required	970-201
	REPLACEMENT PARTS	
1	Case	970-1
2	Cover	970-2
3	Background	960-13
4	Roundel (see page 1-3)	
5	Reflector	950-275C
6	Roundel Retainer	960-19
7	Hood	960-9
8	Lamp Bracket and Socket sub-assembly	970-20
8A	Lamp Receptacle with insulating sleeve	970-18
9	Electric Lamp (specify voltage and wattage)	
10	Reflector Supporting Ring	970-16
11	Roundel Gasket	825
12	Door Packing	960-18
13	5/16" x 2¼" lg. hex. hd. cap screw, steel	
14	¼" x 20 x ½" lg. rd. hd. mach. screw	
15	¼" Internal Tooth Lock Washer	
16	¼"-20 Sq. nut, brass	
17	¼"-20 x ¼" lg. rd. hd. mach. screw, brass	
18	Side Light Gasket	960-48
19	Hinge Pin	950-259
20	Ventilator	1265-6
21	3/32" x ⅝" lg. Cotter Pin	
22	Reflector Holding Clip	970-17
23	No. 8-32 x ½" lg. rd. mach. screw	
24	No. 10-24 x ¾" lg. rd. hd. mach. screw	
25	No. 10 Plain Washer	
26	No. 10 Spring Lock Washer	
27	Retaining Ring	960-7
28	Side Light Glass Disc	811
28A	Side Light Blank Plate	950A-261
29	Crescent Retainer	960-15

Parts for Type A-479-A
Flashing Light Highway Crossing Signals
Type 960 Crossarm

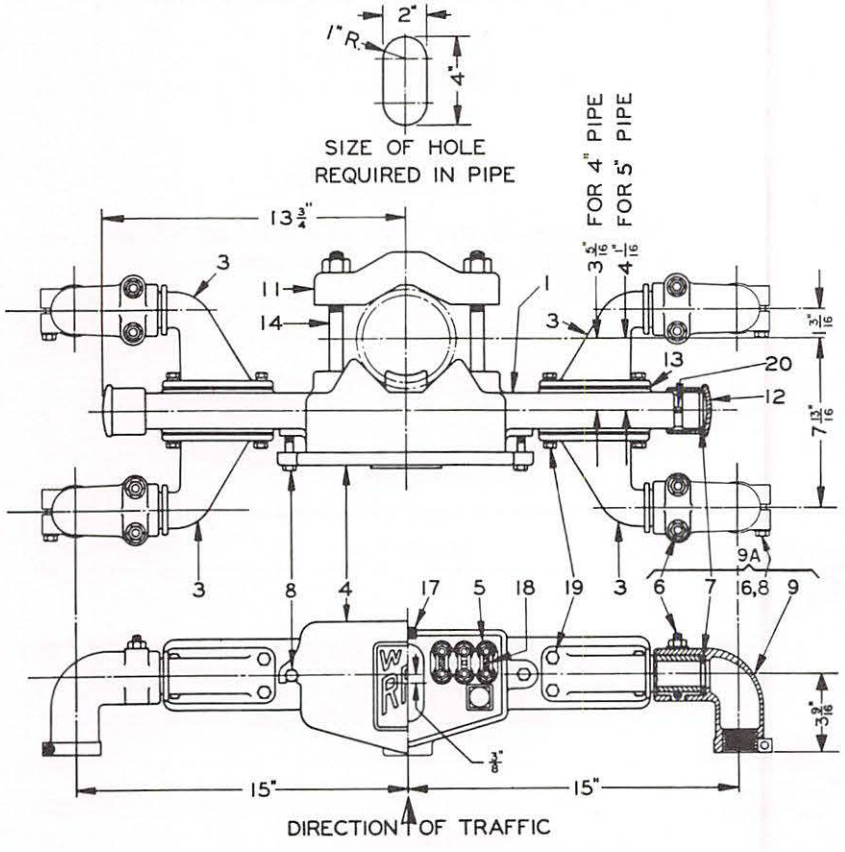

Ref. A

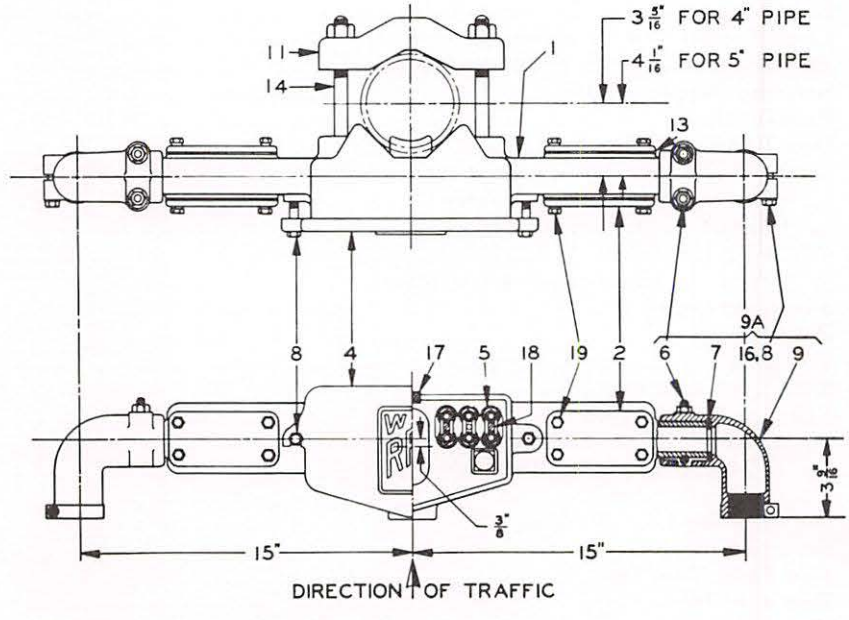

Ref. B

Parts for Type A-479-A
Flashing Light Highway Crossing Signals
Type 960 Junction Box Crossarm

All castings in the Type 960 Junction Box Crossarms are aluminum. Replacements parts of cast aluminum are interchangeable with cast iron parts of former designs and will be furnished for all replacements.

Ref.	Description	Piece No.
A	Type 960 Junction Box Crossarm for two-way indication. (Specify I.D. of pipe)	960-5
B	Same as Ref. A but for one-way indication	960-3
	REPLACEMENT PARTS	
1A	Junction Box Crossarm, sub-assembly of Ref. 1, 4, 5, 17 & 18	950A-62
2	Cover Plate	950A-39
3	Bracket, 3½" extension	950A-57
4	Cover	950A-20
5	Terminal Block, complete, 6 binding posts	2506-106
6	"U" Bolt, ⅜"-16, complete with nuts	950-31
7	Gasket, sponge rubber	950-28
8	⅜"-16 x 2" lg. hex. hd. cap screw, steel	
9	Supporting Bracket casting only	960-131
9A	Supporting Bracket, sub-assembly of Ref. 6, 7, 8, 9, & 16	960-163
11	Adapter Clamp	950A-34
12	Cap	950A-29
13	Gasket, Cork	950-27
14	⅝"-11 x 6" lg. sq. hd. mach. bolt and hex. nut for 4" pipe	
14A	⅝"-11 x 7½" lg. sq. hd. mach. bolt and hex. nut for 5" pipe	
16	⅜" lock washer, steel	
17	⅜" dia. x 27" lg. torchwick packing	
18	No. 10-32 x ⅝" lg. fil. hd. mach. screw and lock washer, steel	
19	⅜"-16 x ⅞" lg. hex. hd. cap screw and lock washer, steel	
20	¼"-20 x ½" lg sq. hd. cup pt. set screw, steel	

Parts for Type A-479-A
Flashing Light Highway Crossing Signals

"STOP ON RED SIGNAL" SIGN

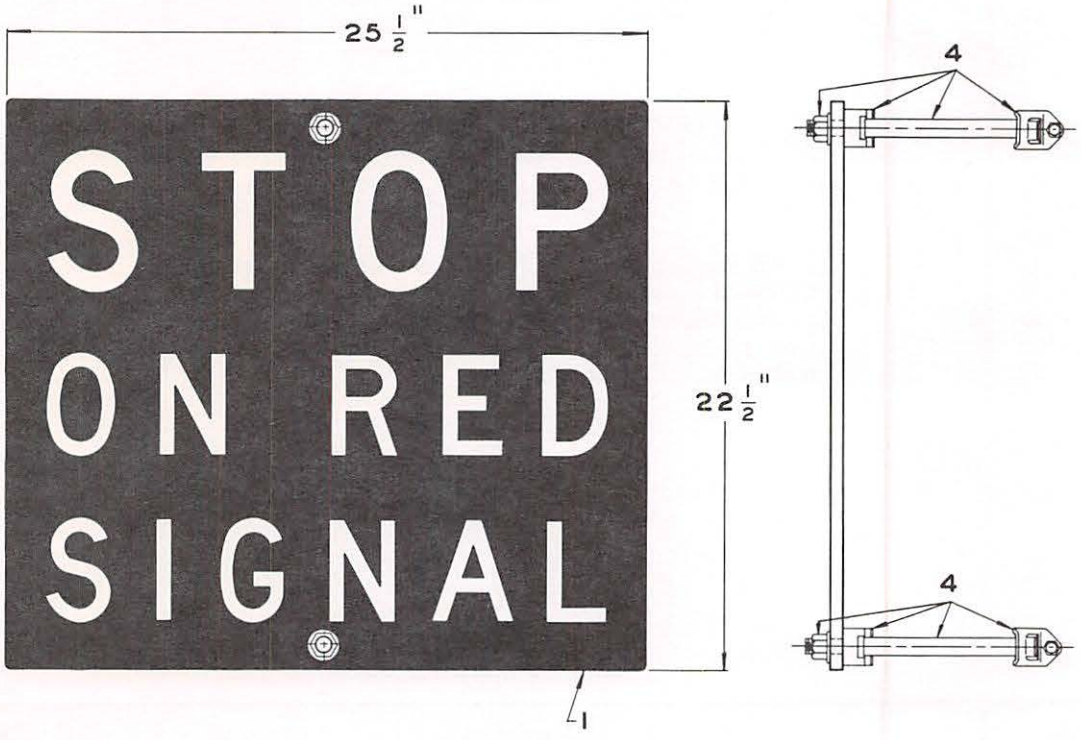

Ref. D

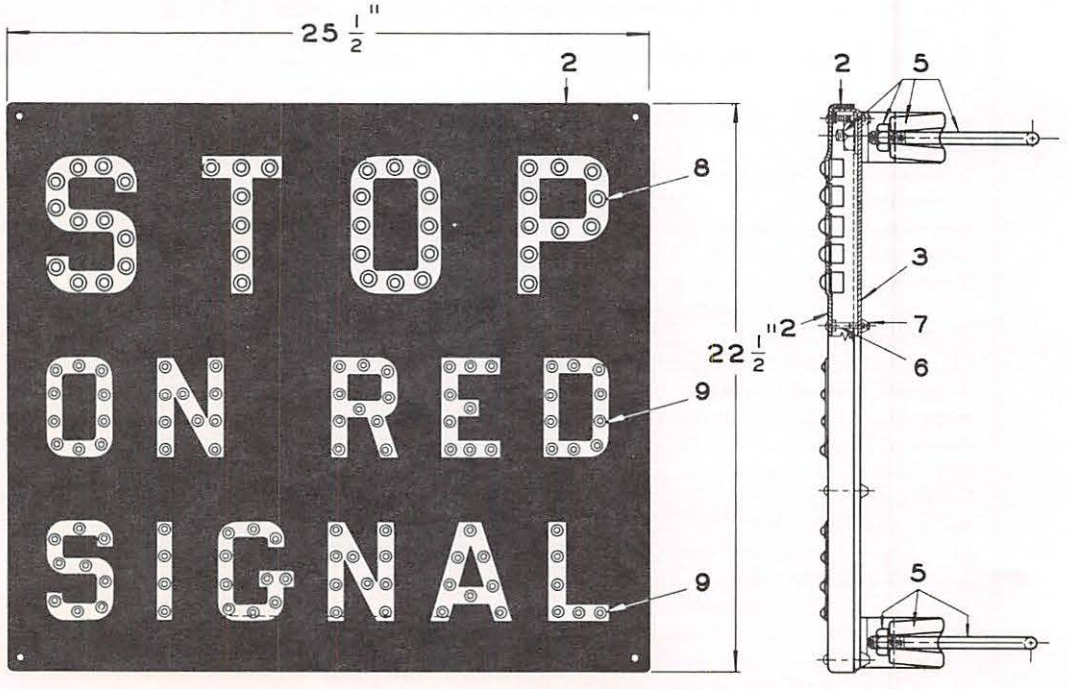

Ref. D1 & D2

Parts for Type A-479-A
Flashing Light Highway Crossing Signals

"STOP ON RED SIGNAL" SIGN

Ref. D

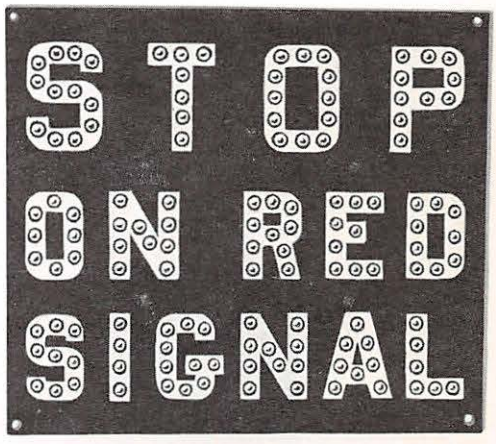

Ref. D1 & D2

Type 3366 "Stop on Red Signal" sign, Reflex-Reflecting Sheet type is on an aluminum plate. White letters on black background. Stainless steel strapping is used for mounting the sign on the pole.

Type 3366 "Stop on Red Signal" sign, Synthetic Baked Enamel, embossed steel front plate with front entrance clear reflector units and telescoping steel back. The screws and nuts are theft-resisting type. White letters on black background. Adaptor clamps and "U" bolts are used for mounting the sign on the pole.

Ref.	Description	Piece No.
D	Type 3366 "Stop on Red Signal" sign. Reflex-Reflecting sheet type on aluminum plate with stainless steel strap kit complete for mounting on 4" or 5" I.D. pipe mast	3366-7
D1	Type 3366 "Stop on Red Signal" sign with synthetic baked enamel finish and adaptor clamp kit complete for mounting on 4" I.D. pipe mast	3366-4
D2	Same as Ref. D1 but for 5" I.D. pipe mast	3366-4A
	REPLACEMENT PARTS	
1	"Stop on Red Signal" aluminum plate only for Ref. D	3366-710
2	"Stop on Red Signal" sign, synthetic baked enamel finish, for Ref. D1 & D2	3366-4L
4	Stainless steel strap mounting kit complete for one sign (specify pipe size)	3364-70
5	U-bolt for 4" I.D. pipe	3364-2
5A	U-bolt for 5" I.D. pipe	3364-5
6	3/16"-24 x 1⅜" lg. stl. carriage bolt, (cad. pl.)	
7	3/16"-24 Theftproof nut	3380-27X
8	No. 3F Plastic Reflector unit, clear	
9	No. 5F Plastic Reflector unit, clear	

Parts for Type A-479-A
Flashing Light Highway Crossing Signals

NUMBER OF TRACKS SIGN

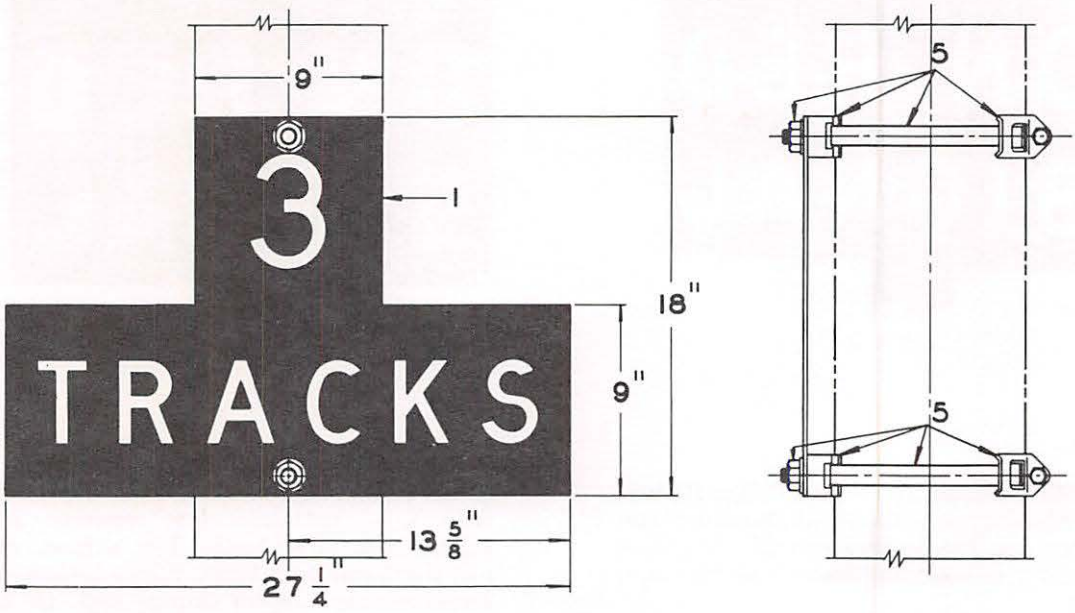

Ref. H

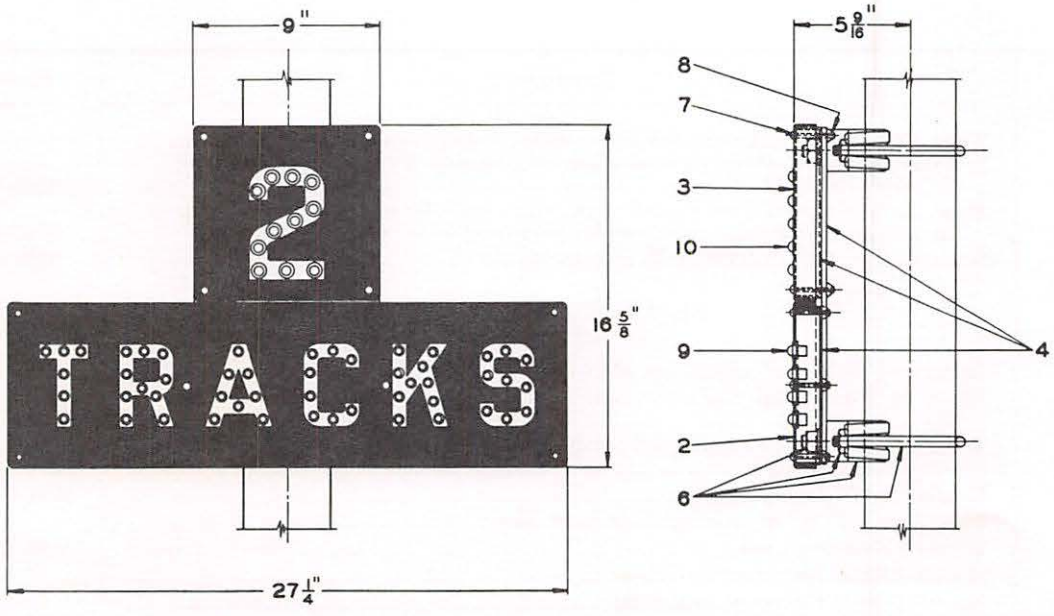

Ref. H2

Parts for Type A-479-A
Flashing Light Highway Crossing Signals

NUMBER OF TRACKS SIGN

Ref. H

Ref. H2

Type 3368 Number of Tracks Sign Reflex-Reflecting Sheet type is on an aluminum plate with white letters on black background, or black letters on white background. Stainless steel strapping is used for mounting the sign on the pole.

Type 3368 Number of Tracks Sign with Synthetic baked enamel; embossed steel front plate with front entrance clear reflector buttons and telescoping steel back. All the screws and nuts are stainless steel, theft-resisting type. White letters on black background. Adaptor clamps and "U" bolts are used for mounting the sign on the pole.

The Vitreous Enamel finish sign is the same as the Synthetic but does not have embossed letters.

Specify numeral required.

Ref.	Description	Piece No.
H	Type 3368 Number of Tracks Sign, Reflex-Reflecting sheet type on aluminum plate with white letters on black background and stainless steel strap kit complete for mounting on 4″ or 5″ I.D. pipe mast. (Specify numeral required.)	3368-7
H1	Same as Ref. H, but with black letters on white background	3368-7C
H2	Type 3368 Number of Tracks Sign, Synthetic Baked Enamel finish, and adaptor clamp kit complete for mounting on 4″ I.D. pipe mast. (Specify numeral required.)	3368-4
H3	Same as Ref. H2, but for 5″ I.D. pipe mast	3368-4A
H4	Type 3368 Number of Tracks Sign, Vitreous Enamel finish, and adaptor clamp kit complete for mounting on 4″ I.D. pipe mast. (Specify numeral required.)	3368-3
H5	Same as Ref. H4, but for 5″ I.D. pipe mast	3368-3A
	REPLACEMENT PARTS	
1	Number of Tracks aluminum plate only, white letters on black background. (Specify numeral required.)	3368-710
1A	Same as Ref. 1 but black letters on white reflecting background	3368-710C
2	"Tracks" front plate, synthetic baked enamel finish for Ref. H2 and H3	3368-27D
2A	Same as Ref. 2 but vitreous enamel for Ref. H4 and H5	3368-27C
3	Numeral front plate synthetic baked enamel finish for Ref. H2 and H3. (Specify numeral required.)	3368-32D
3A	Same as Ref. 3 but vitreous enamel for Ref. H4 and H5	3368-32C
4	Stainless steel strap mounting kit, complete for one sign. (specify pipe size)	3364-70
5	U-bolt for 4″ pipe	3364-2
6	U-bolt for 5″ pipe	3364-5
7	3/16″-24 x 1⅜″ lg. stl. carriage bolt, (cad. pl.)	
8	3/16″-24 theftproof nut	3380-27X
9	No. 5F Plastic Reflector unit, clear	
10	No. 3F Plastic Reflector unit, clear	

Parts for Type A-479-A
Flashing Light Highway Crossing Signals

"RAILROAD CROSSING" SIGN

Ref. J

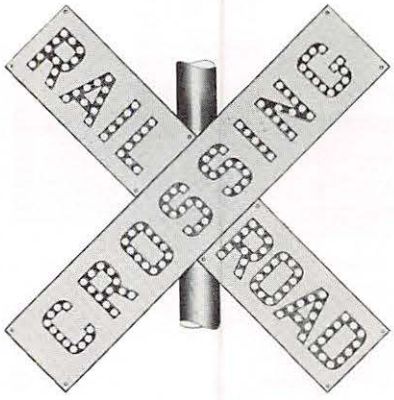

Ref. J1 & J3

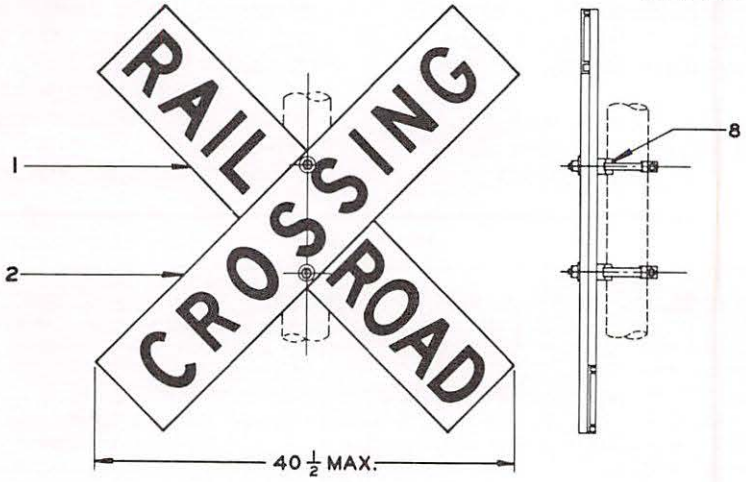

Ref. J

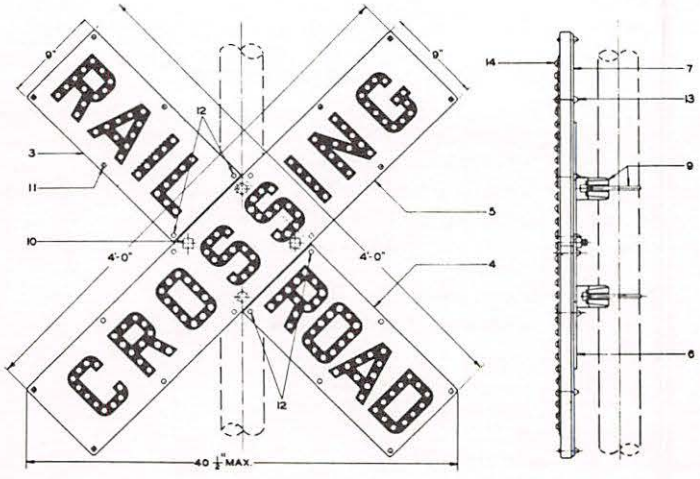

Ref. J1 & J3

Parts for Type A-479-A
Flashing Light Highway Crossing Signals

"RAILROAD CROSSING" SIGN

Type 3380 Railroad Crossing Sign, Reflex-Reflecting Sheet Type is on extruded aluminum, with black letters on white reflecting background. Stainless steel strapping is used for mounting the sign on the pole.

Type 3380 Railroad Crossing Sign, Synthetic baked enamel, embossed steel front plate, with front entrance clear reflector units and telescoping steel back. All the screws and nuts are theft-resisting type. Black letters on white background. Adaptor clamps and "U" bolts are used for mounting the sign on the pole.

The Vitreous Enamel finish sign is the same as the Synthetic, but does not have embossed letters.

Type 3252 Railway Crossing Sign is furnished on extruded aluminum only, with black letters on white reflecting background.

Ref.	Description	Piece No.
J	Type 3380 "Railroad Crossing" Sign, Reflex-Reflecting sheet type on extruded aluminum plate with stainless steel strap kit complete for mounting on 4" or 5" I.D. pipe mast	3380-7
J1	Type 3380 "Railroad Crossing" Sign, Synthetic Baked Enamel finish, with adaptor clamp kit complete for mounting on 4" I.D. pipe mast	3380-4
J2	Same as Ref. J1, but for 5" I.D. pipe mast	3380-4A
J3	Type 3380 "Railroad Crossing" Sign, Vitreous Enamel finish, with adaptor clamp kit complete for mounting on 4" I.D. pipe mast	3380-3
J4	Same as Ref. J3, but for 5" I.D. pipe mast	3380-3A
J5	Type 3252 "Railway Crossing" sign, Reflex-Reflecting sheet type on extruded aluminum plate with stainless steel strap kit complete for mounting on 4" or 5" I.D. pipe mast	3252-7
	REPLACEMENT PARTS	
1	"RAILROAD" Plate, Reflex-Reflecting sheet on extruded aluminum for Ref. J only	3380-710R
1A	Same as Ref. 1, but "RAILWAY" Plate, for Ref. J5 only	3252-710R
2	"CROSSING" Plate, Reflex-Reflecting sheet on extruded aluminum for Ref. J and J5	3380-710C
3	"RAIL" Front Plate, synthetic baked enamel finish, complete with reflector units for Ref. J1 and J2 only	3380-14C
3A	Same as Ref. 3, but vitreous enamel finish	3380-14A
4	"ROAD" Front Plate, synthetic baked enamel finish, complete with reflector units for Ref. J1 and J2 only	3380-15C
4A	Same as Ref. 4 but vitreous enamel finish	3380-15A
5	"CROSSING" Front Plate, synthetic baked enamel finish, complete with reflector units for Ref. J1 and J2	3380-16C
5A	Same as Ref. 5, but vitreous enamel finish	3380-16A
8	Stainless Steel Strap Kit, complete for one sign (specify pipe size)	3364-70
9	U-bolt for 4" I.D. pipe	3364-2
9A	U-bolt for 5" I.D. pipe	3364-5
10	5/8"-11 x 1¼" lg. sq. hd. mach. bolt	
11	3/16"-24 x 1¼" lg. carr. bolt, brass	
12	3/16"-24 x 1½" lg. carr. bolt, brass	
13	3/16"-24 Theft-Proof Nut, brass	3380-27X
14	No. 3F Plastic Reflector units, clear	
15	Key for theftproof nut, steel (not illustrated)	3380-27K

Marker Lights for Highway Crossing Signals

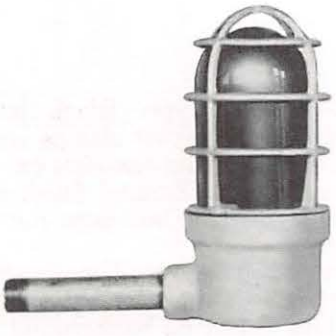

Ref. A

Ref. B

The various Marker Lights are intended for use where Crossing Signals are, of necessity, mounted close to the curb-line or on center-of-street islands. Except Type 1585-80, they are supplied with Red or Yellow glassware, as specified.

Ref.	Description	Piece No.
A	Type 675 Marker Light, with Medium Screw Base lamp receptacle and Red Globe	675-R
A1	Same as Ref. A, but with yellow globe	675-A
B	Type 1585-80 Marker Light, with Single Contact, Bayonet Base, lamp receptacle and Red, Fresnel, Lens	1585-80R
B1	Same as Ref. B, but with clear lens	1585-80C
	REPLACEMENT GLASSWARE	
1	Red Globe for Type 675 Marker Light	90801-1R
1A	Yellow Globe for Type 675 Marker Light	90801-1Y
2	Red Fresnel Lens	1575-11P

Supporting Brackets
Type 3565-267 and Type 3567-367

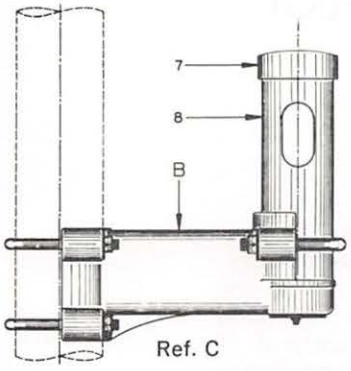

Ref. C

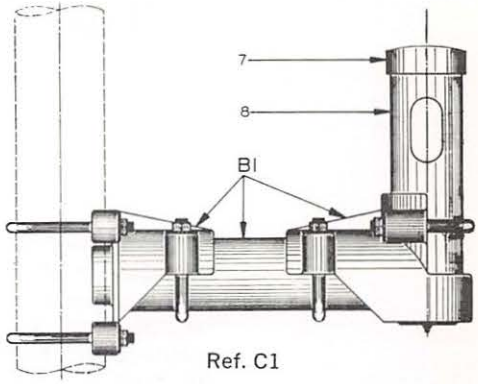

Ref. C1

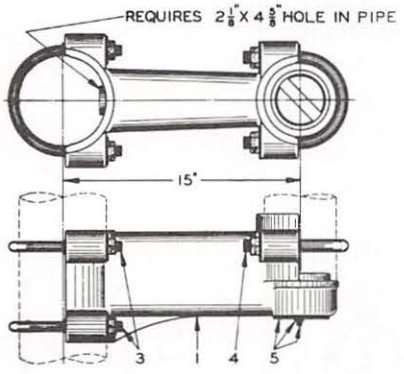

Ref. B

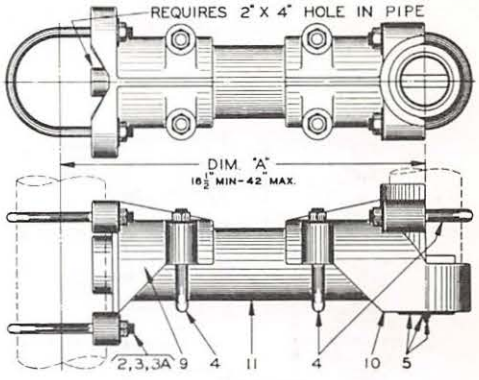

Ref. B1

For mounting Crossing Signal Light Units, with standard Junctionbox Crossarms, at one side of the mast, as necessitated by obstructions to the view, or for mounting extra light units for warnings along side-roads, etc.

The Type 3565-367 Supporting Bracket is of cast iron, designed for mounting on 5″ mast, and provides a 15″ offset of the dowel mast.

The Type 3565-267 Supporting Bracket consists of castings and a length of 4″ I.D. pipe, which may be varied in length, to provide an offset of the dowel mast, of 18½″, minimum, up to 42″, maximum. The inner bracket, with appropriate "U" Bolts, will fit 4″, 5″ or 6″ I.D. pipe.

Either One-way or Two-way Indication Light Assemblies may be mounted on the dowel masts, which can be turned in the socket to any desired angle.

Ref.	Description	Piece No.
B	Supporting Bracket Assembly, Less Dowel Mast	3565A-67
B1	Supporting Bracket Assembly, Less Dowel Mast. (Specify Dimension "A" and diameter of signal mast.)	3565A-167
C	Supporting Bracket and Dowel Mast Assembly	3565A-367
C1	Supporting Bracket and Dowel Mast Assembly. (Specify Dimension "A" and diameter of signal mast)	3565A-267
	REPLACEMENT PARTS	
1	Bracket only	3565-69
2	"U" Bolt, for 4″ I.D. Pipe Mast	1264-4
3	"U" Bolt, for 5″ I.D. Pipe Mast	1264-5
3a	"U" Bolt, for 6″ I.D. Pipe Mast	1264-6
4	"U" Bolt, for 4″ I.D. Pipe Extension or Dowel Mast	3565-163
5	Cover and Clamp, for wire opening	3565-162A
7	Pinnacle, for 4″ I.D. Pipe	110A-6
8	Dowel Mast, 4″ I.D. x 14″ long, or length as specified	714-8
9	Inner Support, Casting only	3565A-168
10	Outer Support, Casting only	3565A-166
11	Extension Pipe, 4″ I.D. x length as required	

"No Turn" Signals
Type A457 and Type A534

Signals of this type are often used in conjunction with Flashing Light Signals at locations where the use of additional Lights on the signal mast would not provide suitable added protection. Their use is the safest method of protecting street or highway traffic on roadways running parallel to the railroad without interfering with traffic not crossing the tracks.

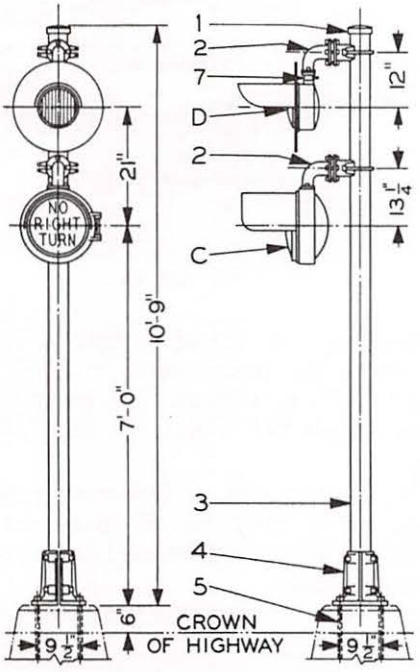

Ref. A

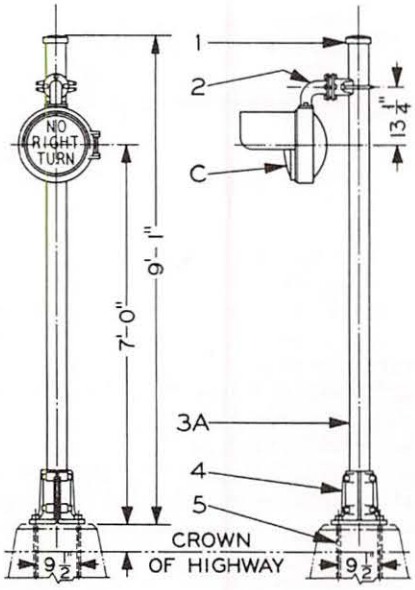

Ref. B

NOTE:
1 — For ordering references for these signals and components see following page.
2 — For ordering references for replacement parts for Yellow Light Unit see Page 1-17 in this Catalog Section.
3 — Replacement Parts List for NO TURN Sign will be furnished on request.
4 — The No Turn Light Unit will be furnished with other legend, as may be required, stenciled on inner glass.

"No Turn" Signals
Type A457 and Type A534

Ref.	Description	Piece No.
A	"NO LEFT TURN" Signal with Yellow Flashing Light Unit, Pole, Base, Pinnacle and Anchor Bolts	A457L
A1	Same as Ref. A but, "NO RIGHT TURN"	A457R
A2	Same as Ref. A but, "NO TURN"	A457N
B	"NO LEFT TURN" Signal with Pole, Base, Pinnacle and Anchor Bolts	A534L
B1	Same as Ref. B but, "NO RIGHT TURN"	A534R
B2	Same as Ref. B but, "NO TURN"	A534N
C	"NO LEFT TURN" Sign with Adaptor Bracket and "U" Bolt	939-1L
C1	Same as Ref. C but, "NO RIGHT TURN"	939-1R
C2	Same as Ref. C but, "NO TURN"	939-1N
C3	"NO LEFT TURN" Sign, only, (without Bracket and "U" Bolt)	939-1LX
C4	Same as Ref. C3 but, "NO RIGHT TURN"	939-1RX
C5	Same as Ref. C3 but, "NO TURN"	939-1NX
D	Yellow Flashing Light Unit, with Adaptor Bracket and "U" Bolt	970-501Y
D1	Same as Ref. D but, without Bracket and "U" Bolt	970-201Y
	REPLACEMENT PARTS	
1	Pinnacle, for 4" I.D. Pipe Mast	110A-6
2	Adaptor Bracket with "U" Bolt, nuts and washers	939-51
3	Pipe Mast, 4" I.D. x 10'8" long, for A457 signal	714-21-3
3A	Pipe Mast, 4" I.D. x 9'0" long, for A534 sign	714-20-2
4	Split Base, for 4" I.D. Pipe Mast	14492A
5	Anchor Bolt, 1" x 24" long, with Hexagon Nut and Washer	11079-1
6	Transparent Outer Cover	221718
7	Adaptor for mounting Type 970-201Y Light Unit on Ref. 2	950-72B

NOTE:

1 — 10 Volt, 25 Watt, Single Contact, Bayonet Base, Electric Lamps, S-11 Bulb, having light center length of 1¼", are recommended for the NO TURN signs, but are not furnished unless specified on order.

2 — No Turn Sign and Yellow Flashing Light Unit mounting Brackets are furnished with "U" Bolts for 4" Pipe Mast, unless otherwise specified.

REPLACEMENT PARTS ONLY
(Manufacture Discontinued)

Type 950A-201 Crossing Signal Light Unit

(Single Contact, Bayonet Base, Receptacle)

All Castings in the Type 950A-201 Light Unit are Aluminum. Replacement parts of cast aluminum will be furnished. Aluminum and cast iron parts are physically interchangeable.

Sheet Aluminum Hoods and Backgrounds will be furnished on all orders.

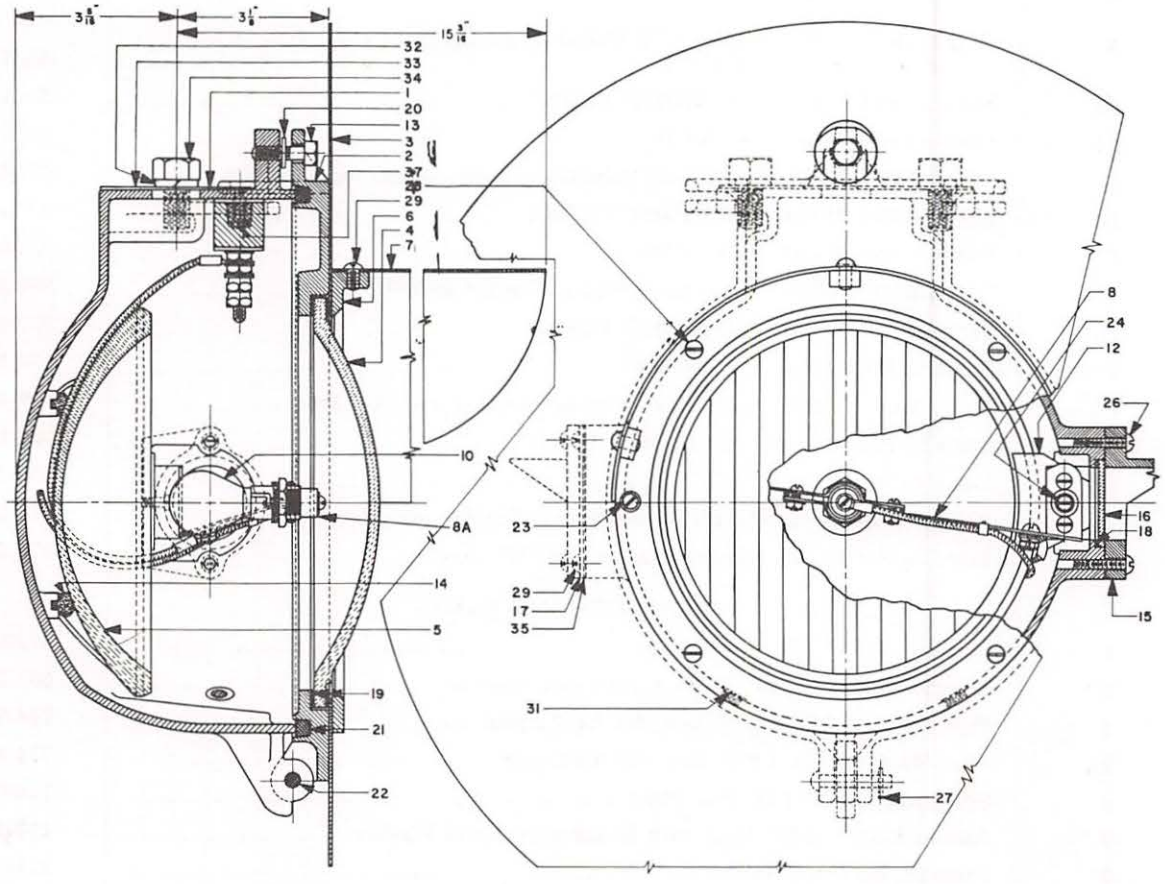

NOTE:
1 — For ordering references for replacement parts for this Light Unit see following page.
2 — For ordering references for replacement parts for the Older Style, Type 950-1, Light Unit see Plate D370 in Old Catalog Section D, Part No. 2.

REPLACEMENT PARTS ONLY

(Manufacture Discontinued)

Type 950A-201 Crossing Signal Light Unit

(Single Contact, Bayonet Base, Receptacle)

Ref.	Description	Piece No.
3	Background	950-13A
4	Roundel, (See listing Page 1-3)	
5	Mangin Mirror Reflector	822
6	Roundel Retaining Ring	802-1A
7	Hood	823-1A
8	Lamp Bracket and Receptacle, sub-assembly	950-250A
8a	Lamp Receptacle and Adjusting Nut, only	950-255
10	Single Contact, Bayonet Base Lamp, (Specify Voltage and Wattage)	
12	Reflector Retaining Plate	880-211
13	Cap Screw, 5/16" x 7/8" long, Hexagon Head, Steel	
13a	Cap Screw and Retaining Washer Assembly	950-270R
14	Reflector Pad	880-15
15	Side Light Hood	880A-23
16	Side Light Glass Disc	811
17	Side Light Blank Cover	801-3
18	Side Light Gasket	818-48
19	Roundel Gasket	825
20	Retaining Washer	950-270
21	Packing, for cover	880-18
22	Hinge Pin and Cotter	950-259A
23	Machine Screw, No. 10-32 x 1/2" long, Fillister Head, Brass	
24	Machine Screw, No. 10-32 x 3/8" long, Fillister Head, Brass	
25	Machine Screw, No. 10-32 x 5/8" long, Round Head, Brass	
26	Machine Screw, 1/4"-20 x 3/4" long, Round Head, Brass	
27	Cotter Pin, 3/32" x 5/8" long, Steel	
29	Machine Screw, 1/4"-20 x 3/8" long, Round Head, Brass	
31	Ventilator	818-49
32	Lock Washer, 1/2", Steel	
33	Gasket	950-17
34	Cap Screw, 1/2"-13 x 1 1/4", Hexagon Head, Steel	
35	Gasket	801-2

REPLACEMENT PARTS ONLY

(Manufacture Discontinued)

Junction Box Cross Arm For Mounting Type 950A-201 Crossing Signal Light Units

All castings in the Type 950A Junctionbox Crossarms are Aluminum. Replacement parts of cast aluminum will be furnished unless cast iron is specified. Aluminum and cast iron parts are physically interchangeable.

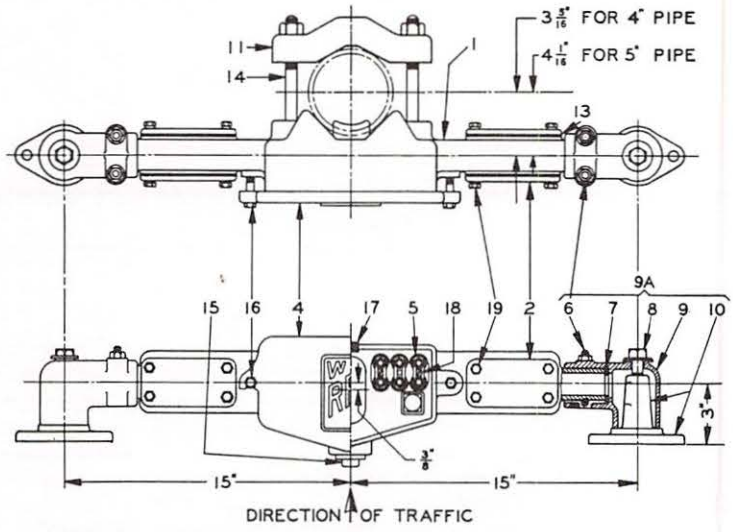

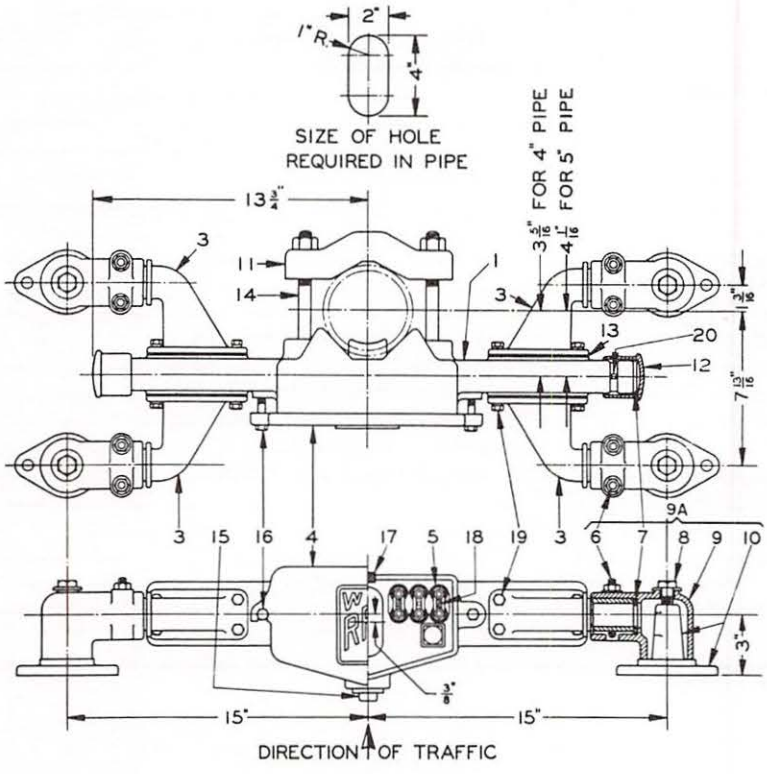

NOTE:
1 — For ordering references for replacement parts for these Junctionbox Crossarms see following page.

REPLACEMENT PARTS ONLY
(Manufacture Discontinued)

Junction Box Cross Arm For Mounting Type 950A-201 Crossing Signal Light Units

Ref.	Description	Piece No.
1a	Junction box, subassembly of references 1, 4, 5, 15, 17, and 18	950A-62
2	Cover Plate	950A-39
3	Bracket, 3½" extension	950A-57
4	Cover, with packing	950A-21
5	Terminal Block, complete, 6 binding posts	2506-106
6	"U" Bolt, complete with nuts	950-31
7	Gasket, sponge rubber	950-28
8	Bolt, complete with cupped washer	950-33
9	Supporting Bracket, casting only	950A-30
9a	Supporting Bracket, sub-assembly of references 6 to 10 inc.	950A-63
10	Light Unit Support	950A-32
11	Adaptor Clamp	950A-34
12	End Cap, with set screw and gasket	950A-29A
13	Gasket, cork	950-27
14	Machine Bolt, with hexagon nut, ⅝"-11 x 6" long, for mounting junctionbox crossarm on 4" I.D. Pipe	
14a	Machine Bolt, with hexagon nut, ⅝"-11 x 7½" long, for mounting junction-box crossarm on 5" I.D. Pipe	
14b	Machine Bolt, with hexagon nut, ⅝"-11, curved, for mounting junctionbox crossarm on 6" I.D. Pipe	3364-37
14c	Machine Bolt, with hexagon nut, ⅝"-11, curved, for mounting junctionbox crossarm on 8" I.D. Pipe	3364-35
15	Pipe Plug, 1¼"	
16	Cap Screw, ⅜"-16 x 2" long, Hexagon Head, Steel	
17	Torchwick Packing, ⅜" diameter, 27" long	
18	Machine Screw No. 10-32 x ⅝" long, Fillister Head, Brass	
19	Cap Screw, ⅜"-16 x ⅞" long, Hexagon Head. steel, with plain washer	
20	Set Screw, ¼"-20 x ½" long, Square Head, Cup Point	

Suggested Designs for Concrete Foundations For Flashing Light Highway Crossing Signals

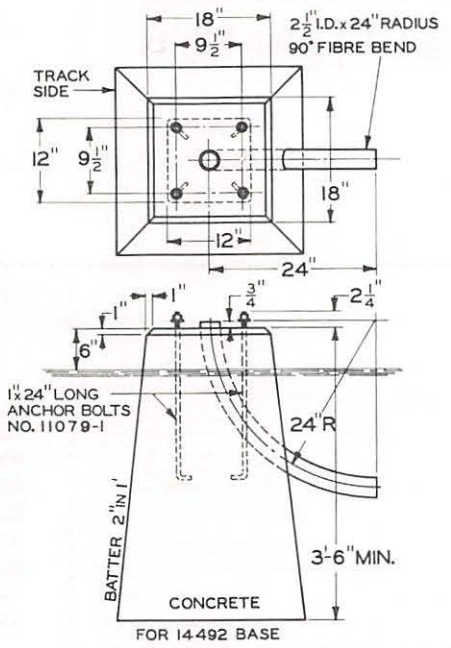

FOR 14492 BASE

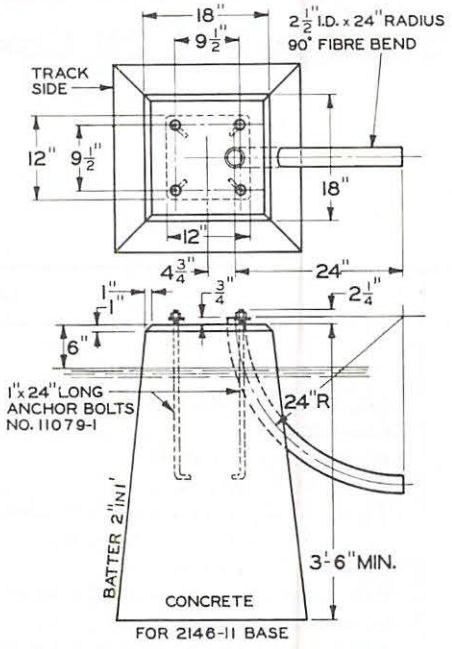

FOR 2146-11 BASE

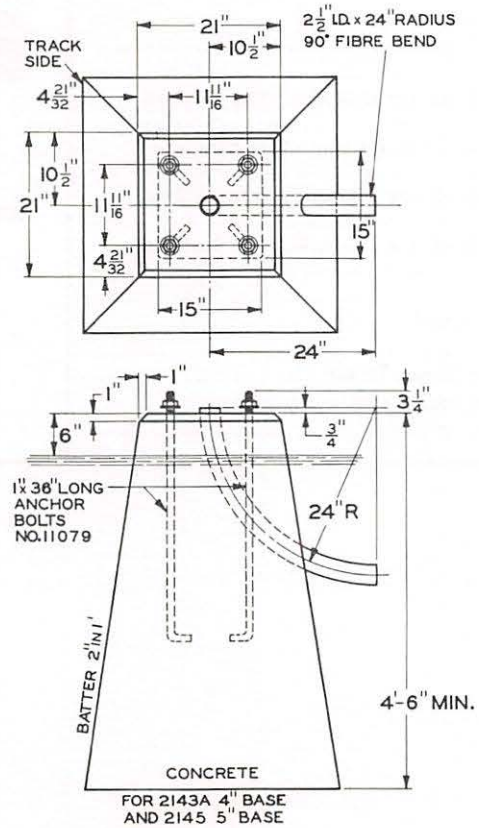

FOR 2143A 4" BASE AND 2145 5" BASE

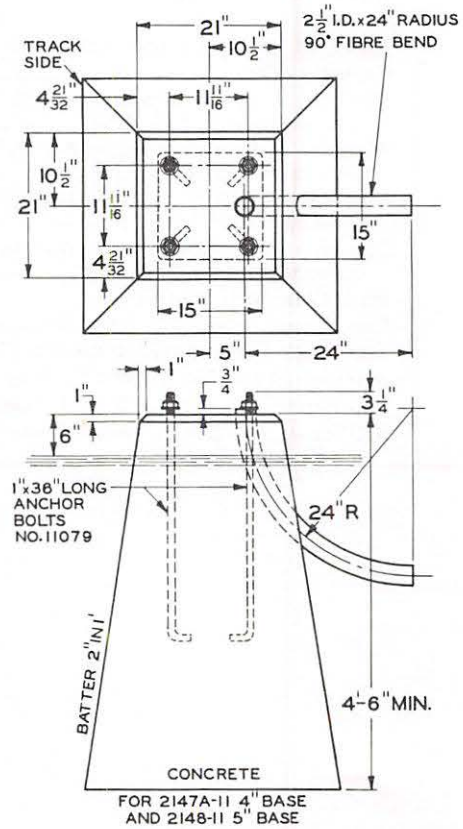

FOR 2147A-11 4" BASE AND 2148-11 5" BASE

TYPE A-479A 12" FLASHING LIGHT HIGHWAY CROSSING SIGNAL with TYPE 975-201 LIGHT UNITS

GENERAL INFORMATION

Latest Improvements, Meet A.A.R. Specifications

The Flashing Light Highway Crossing Signals manufactured by Western-Cullen-Hayes represent the latest improvements in design. They meet all A.A.R. Specifications.

Arrangements To Suit Your Needs

This catalog illustrates the most popular arrangements of Flashing Light Signals and accessories, such as junction box-crossarm with two or four flashing light units for one-way or two-way indication. Other arrangements can be furnished to meet particular requirements.

Popular Arrangements

By far, the majority of Flashing Light type highway crossing signal installations require two flashing light signals, with two-way indication; one with a bell and one with a pinnacle. W-C-H's A-479A all aluminum assembly with 9½" x 9½" or 11 11/16" x 11 11/16" anchor bolt spacings and reflex-reflecting sheet type signs, will meet most requirements. The Type 0333 Bell is usually required. Plastic roundels having 20° horizontal spread and 10° downward deflection are furnished as standard. For other roundels see page 1-55.

Extra Indication Assemblies

Many locations require flashing light highway crossing signals with extra light assemblies to provide extra indication. Generally these lights are mounted 90 degrees to the right of and above the main lights as illustrated in references C, C1 and D on page 1-53. The extra lights may be mounted at any angle which may be specified. If "Stop On Red Signal" or number of tracks sign is required, it must be specified.

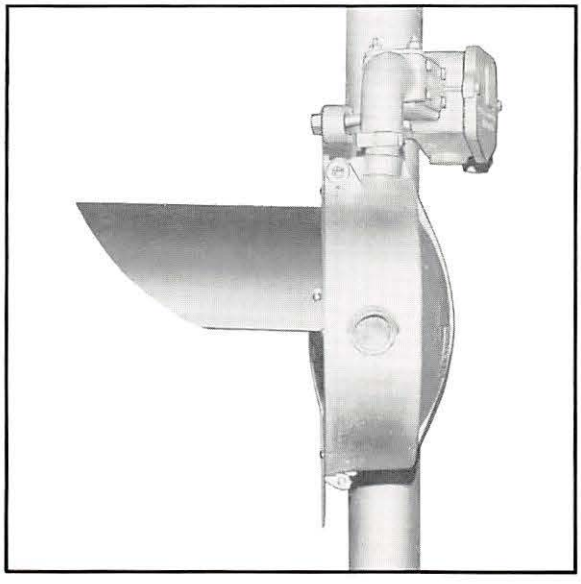

WESTERN-CULLEN-HAYES, Inc.
2700 West 36th Place • Chicago, Illinois 60632

TYPE A-479A 12" FLASHING LIGHT HIGHWAY CROSSING SIGNAL with TYPE 975-201 LIGHT UNITS

Popular Arrangements

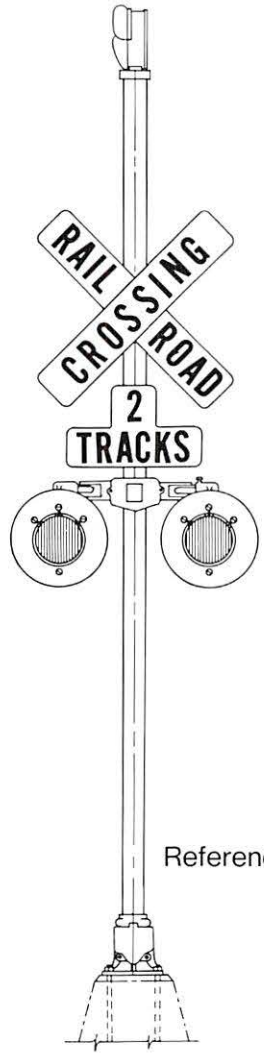

Reference A

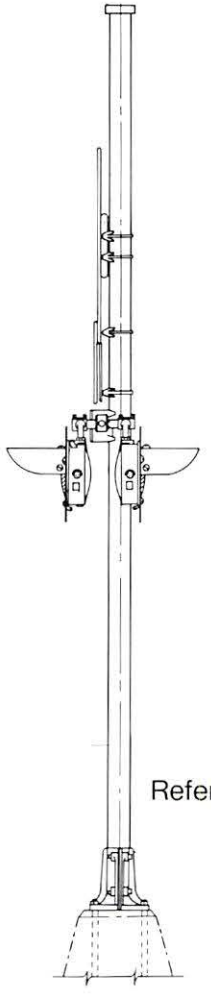

Reference A1

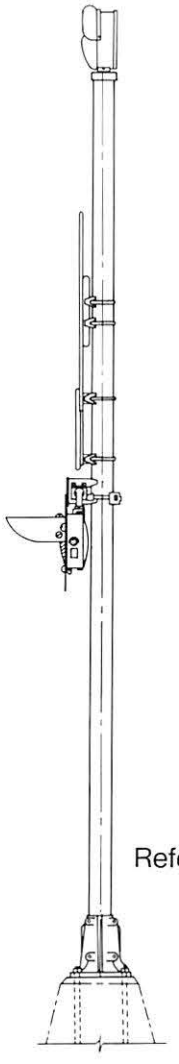

Reference B

ORDERING REFERENCES

Listed below are ordering references for assemblies shown above. Refer to catalog pages 1-10 thru 1-13 for details of mast and base components, pages 1-20 thru 1-25 for details of various signs and sign mounting kits and page 1-27 for support brackets.

Reference	Description	Piece No.
A	Flashing Light Highway Crossing Signal complete; two-way indication, with 0333 Bell. (Specify voltage and wattage of lamp bulbs, if required, and mast and base sizes)	A479AB
A1	Same as Ref. A, but with pinnacle in place of bell.	A479AP
B	Flashing Light Highway Crossing Signal complete; one-way indication, with 0333 Bell. (Specify voltage and wattage of lamp bulbs, if required, and mast and base sizes)	A479AB-1
B1	Same as Ref. B, but with pinnacle in place of bell. (Not shown)	A479AP-1

Extra Indication Assemblies

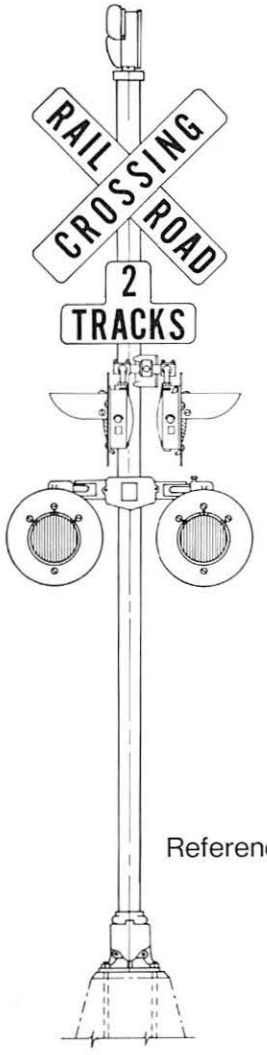

Reference C

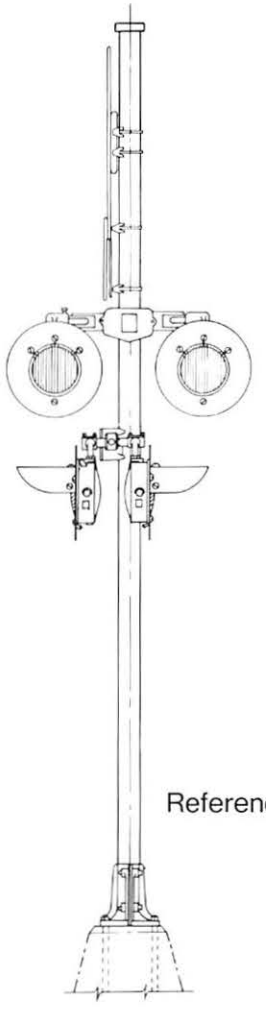

Reference C1

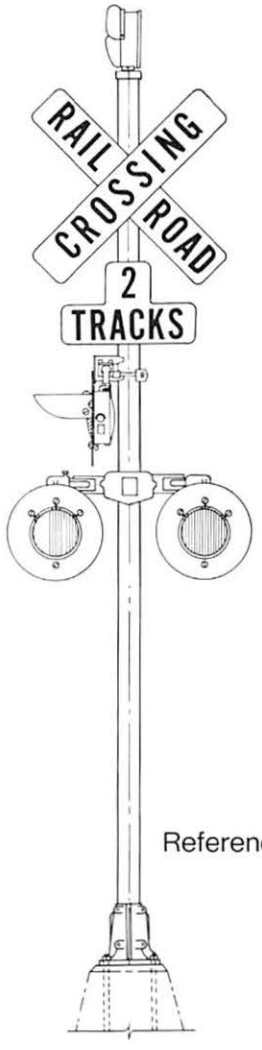

Reference D

ORDERING REFERENCES

Listed below are ordering references for assemblies shown above. Refer to catalog pages 1-10 thru 1-13 for details of mast and base components, pages 1-20 thru 1-25 for details of various signs and sign mounting kits and page 1-27 for support brackets.

Reference	Description	Piece No.
C	Flashing Light Highway Crossing Signal complete; two-way indication main lights, two-way indication extra lights mounted 90° to the right and 0333 Bell. (Specify voltage and wattage of lamp bulbs, and mast and base sizes)	A479AB-8
C1	Same as Ref. A, but with pinnacle in place of bell.	A479AP-8
D	Flashing Light Highway Crossing Signal complete; two-way indication main lights, with one-way indication extra lights mounted 90° to the right and 0333 Bell. (Specify voltage and wattage of lamp bulbs, and mast and base sizes)	A479AB-6
D1	Same as Ref. B, but with pinnacle in place of bell. (Not shown)	A479AP-6

WESTERN-CULLEN-HAYES, Inc.
2700 West 36th Place • Chicago, Illinois 60632

PARTS for TYPE A-479A 12″ FLASHING LIGHT HIGHWAY CROSSING SIGNAL with TYPE 960 CROSSARM AND TYPE 975-201 LIGHT UNITS

TYPE 975-204-REFERENCE E
Flashing Light Signal—Two Way Indication

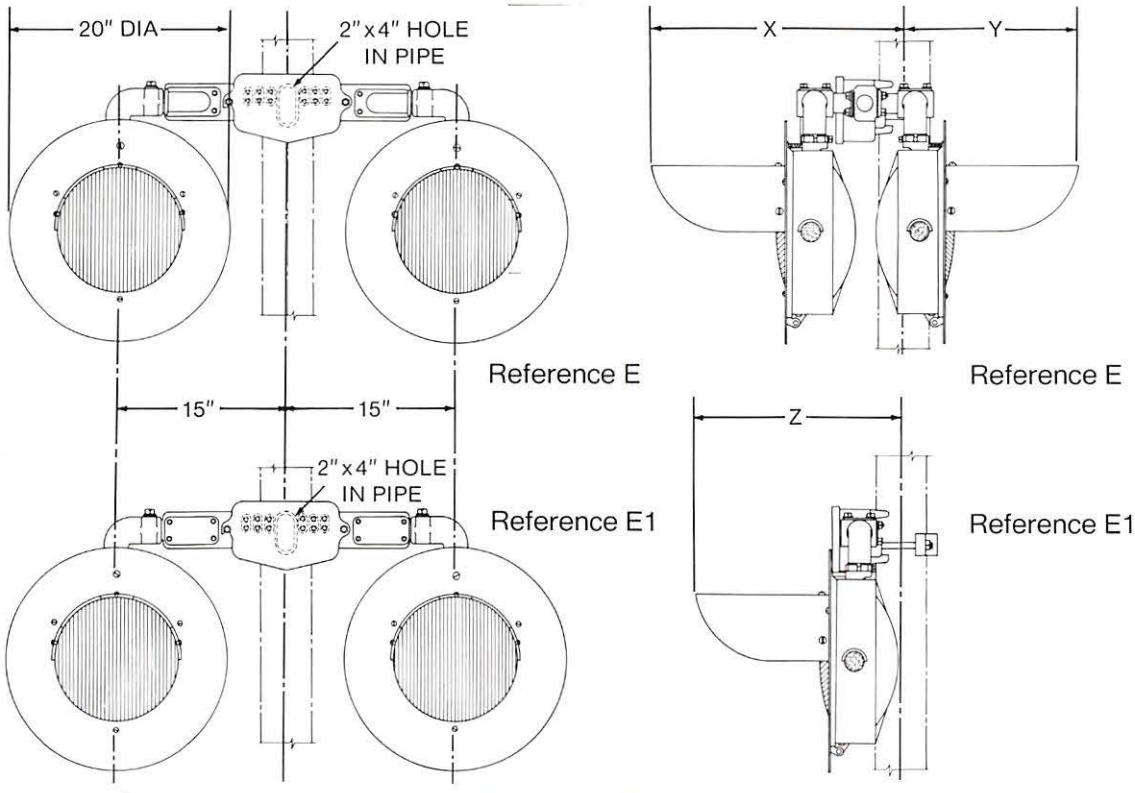

TYPE 975-202-REFERENCE E1
Flashing Light Signal—One Way Indication

SPECIFICATIONS

Cast Aluminum Crossarm, Brackets, Elbows and Light Units. Sheet Aluminum Backgrounds and Hoods. Type 975-201 Light Units are equipped with Parabolic Glass Reflectors, 12″ diameter Red Roundels and Single Contact-Bayonet base receptacles positioned to accommodate S-8 or S-11 lamp bulb, having 1¼″ light center length. See pages 1-18 and 1-19 for Crossarm component detail.

ORDERING REFERENCES

Reference	Description	Piece No.
E	Type 975 Flashing Light Unit Assembly with Type 960 Junction Box Crossarm For Two-Way indication with 4 Light Units. (Specify I.D. of pipe and roundels)	975-204
E1	Same as Ref. E, but one-way indication with 2 light units	975-202
E2	Type 975 Light Unit Only	975-201
E3	Type 960 Junction Box Crossarm for two-way indication. (Specify I.D. of pipe)	960-5
E4	Same as Ref. E3, but for one-way indication	960-3

SPECIFICATION TABLE FOR I.D. OF PIPE

Pipe Size	Dim. X	Dim. Y	Dim. Z
4″ I.D.	27½″	21¼″	23″
5″ I.D.	28¼″	20½″	24″
6″ I.D.	28″	20″	24½″
8″ I.D.	30¼″	18½″	25½″

ROUNDELS

Roundels furnished comply with appropriate sections of A.A.R. Signal Manual Parts 136 and 166. They are 12" diameter, red, with color meeting requirements of A.A.R. Signal Manual, Section 136. Type 5358 are recommended for general use.

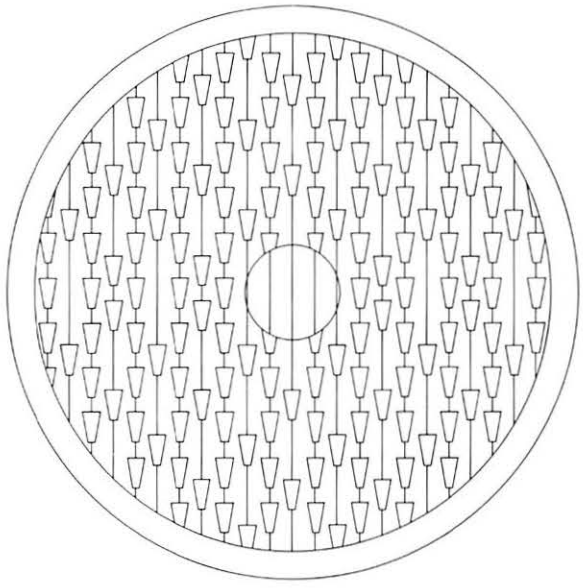

5368

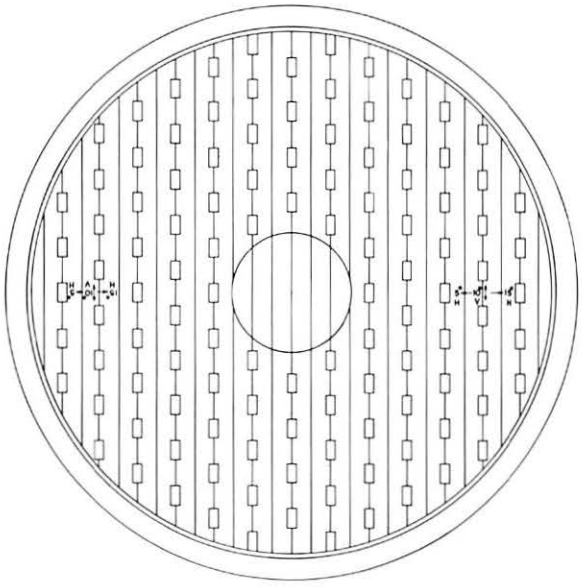

5358

SPECIFICATIONS

All 12" type roundels are made of high strength, impact resistant polycarbonate plastic.

ORDERING REFERENCES

Reference	Description	Piece No.
1	Type 5358 Roundel, 20 degree horizontal spread 10 degree down deflection, 2" Hot Spot	**5358**
2	Type 5368 Roundel, 20 degree horizontal spread 32 degree down deflection, 2" Hot Spot	**5368**
3	Type 5359 Roundel, 70 degree spread	**5359**
4	Type 5369 Roundel, 30 degree horizontal spread 15 degree down deflection	**5369**

WESTERN-CULLEN-HAYES, Inc.
2700 West 36th Place • Chicago, Illinois 60632

PARTS for TYPE A-479A
12″ FLASHING LIGHT HIGHWAY CROSSING SIGNAL
with TYPE 975-201 LIGHT UNITS

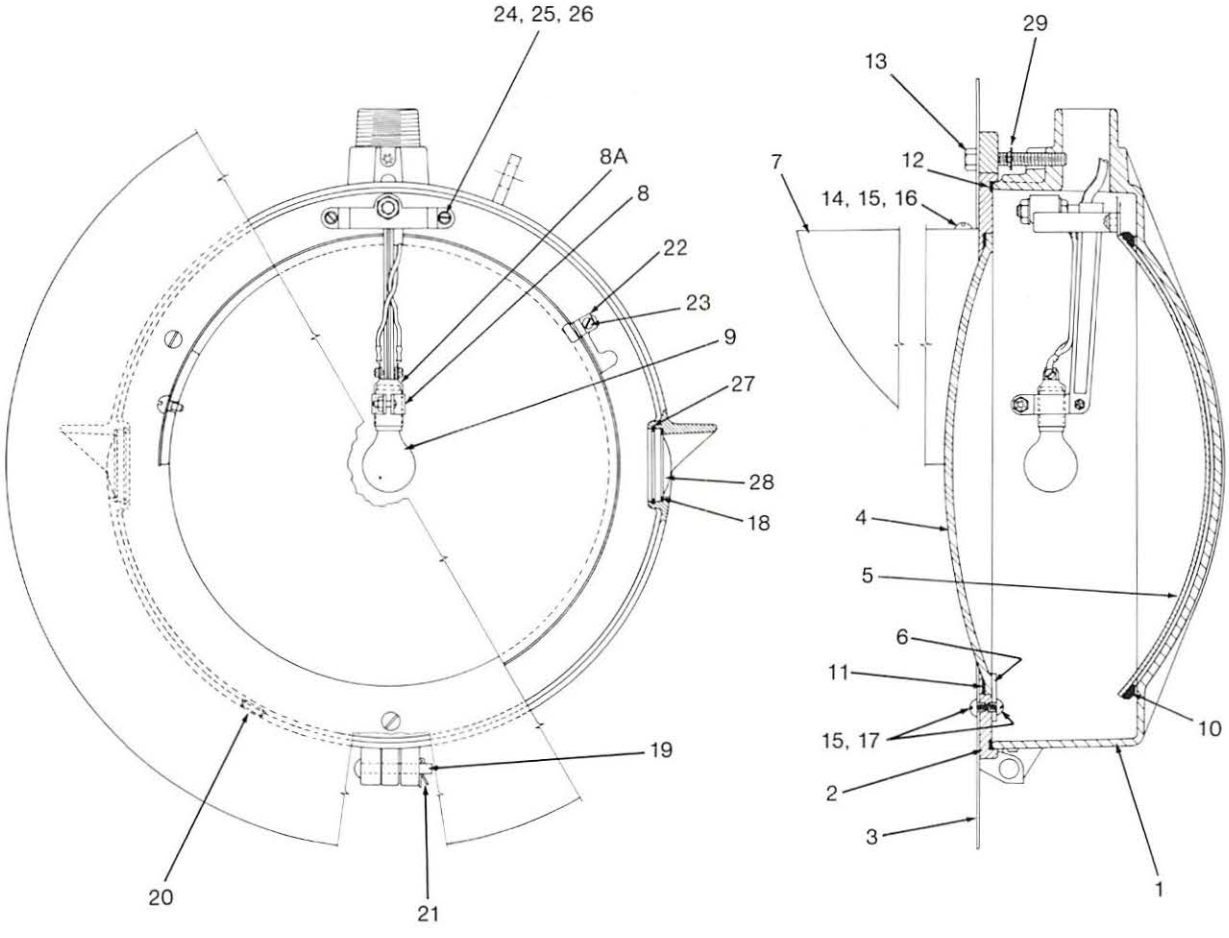

SPECIFICATIONS – 12″ FLASHING LIGHT UNIT

All castings in the Type 975-201 Light Unit are aluminum, with sheet aluminum hood and background.

ORDERING REFERENCES

Reference	Description	Piece No.
A	Type 975 Flashing Light Unit assembly, specify roundel desired and voltage and wattage of lamp, if required	975-201
	REPLACEMENT PARTS	
1	Case	975-1
2	Cover	975-2
3	Background	975-13
4	Roundel (See Page 1-55)	
5	Reflector	975-275C
6	Roundel Retainer	975-24
7	Hood	975-9
8	Lamp Bracket and Socket sub-assembly	975-20A
8A	Lamp Receptacle with insulating sleeve	
9	Electric Lamp (Specify voltage and wattage)	
10	Reflector Supporting Ring	975-16
11	Roundel Gasket	975-825
12	Door Packing	975-18
13	5/16" x 2¼" lg. Hex Hd. Cap Screw Stainless steel	
14	¼" x 20 x ½" lg. Rd. Hd. Mach. Screw	
15	¼" Internal Tooth Lock Washer	
16	¼"-20 Sq. Nut, brass	
17	¼"-20 x ¼" lg. Rd. Hd. Mach. Screw, brass	
18	Side Light Gasket	960-48
19	Hinge Pin	975-259
20	Ventilator	1265-6
21	3/32" x 5/8" lg. Cotter Pin	
22	Reflector Holding Clip	970-17
23	No. 8-32 x 3/8" lg. Rd. Mach. Screw	
24	No. 10-24 x ¾" lg. Rd. Hd. Mach. Screw	
25	No. 10 Plain Washer	
26	No. 10 Spring Lock Washer	
27	Retaining Ring	960-7S
28	Side Light Glass Disc	811
28A	Side Light Blank Plate	950A-261
29	Crescent Retainer	970-39

WESTERN-CULLEN-HAYES, Inc.
2700 West 36th Place • Chicago, Illinois 60632

NOTES

WESTERN-CULLEN DIVISION
FEDERAL SIGN & SIGNAL CORPORATION

WC STATIONARY (WALKOUT) CANTILEVERS

- Provides Significant Improvement in SIGNAL VISIBILITY AT GRADE CROSSINGS
- Signal maintenance is safer, easier, faster
- 2 types available, adjustable or fixed length arm
- Custom designs available

Meets AAR and AASHO Standards and Requirements*

*American Association of State Highway Officials

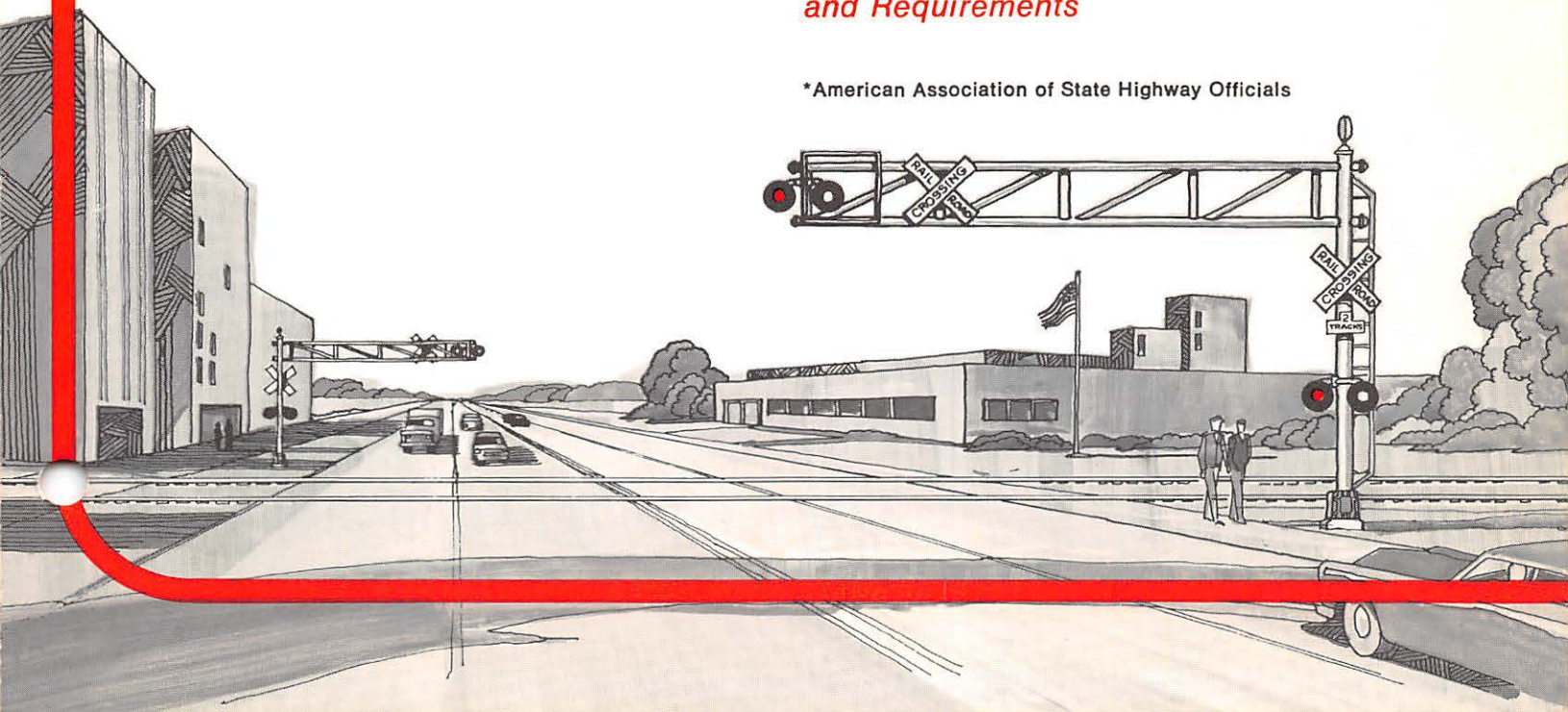

WC

Stationary (*Walkout*) Cantilevers improve grade crossing protection

- Flashing lights can be placed above traffic in direct view of the motorist
- 17 foot road clearance above top of foundation
- Railroad personnel can maintain equipment safely—without obstructing highway traffic. Special vehicles are not required.
- Minimum maintenance is required

Western-Cullen's Stationary Cantilevers are designed to meet the Standards of the American Association of State Highway Officials (AASHO) and exceed AAR requirements. These rugged cantilevers can withstand 100 mile per hour winds with gusts up to 130 MPH, ice loadings to 3 pounds per square foot and live loads of 500 pounds at the tip. All aluminum framing members are of 6061-T6 which is 25% stronger than materials normally used in railroad cantilevers.

Split base and junction box bases are of 356-T6 aluminum, the only type of alloy approved by AASHO. All welding is done by certified welders in accordance with ASME Boiler and Pressure Vessel Code, Section IX, Part B. Bolt spacing: 11-11/16″ x 11-11/16″. Anchor bolts: 1¼″ x 72″.

Service of equipment can be done quickly by railroad personnel working safely above the traffic. There is no need to tie up highways or employ specially equipped vehicles. Walkway arms and working platforms on cantilevers have non-slip safety grating to assure safe footing under adverse weather conditions. Where severe icing occurs frequently Grip Strut® safety grating can be provided. Hand rail and grab irons are included for added safety. Anti-climb guards are provided to prevent vandals from climbing the cantilever.

Single mast construction is used with arm lengths 8′ to 31′; double masts are used for 32′ to 40′ arms. Double mast spacing: 3′-0″.

Use of Western-Cullen's stationary cantilever provides improved locations for flashing light, directly in front of oncoming traffic. Highway safety and railroad safety is improved.

® Trade Mark U.S. Gypsum Co.

Fixed length Walkout Cantilever

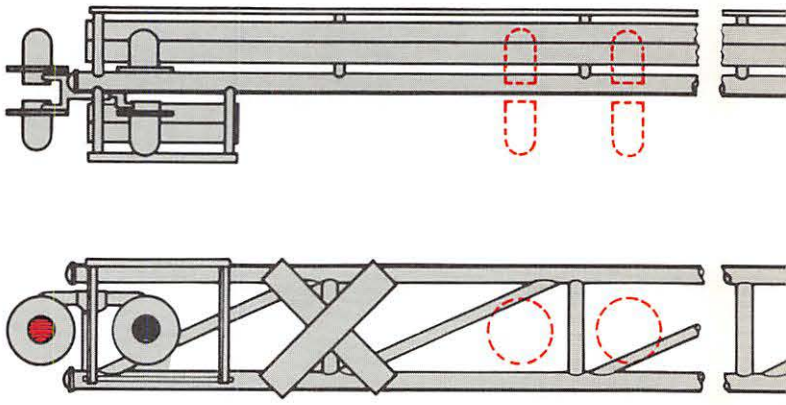

- Lower cost
- Welded construction
- Available in 1 ft. increments from 8 to 40 feet

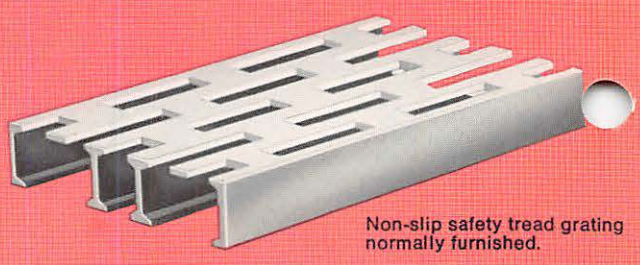

Non-slip safety tread grating normally furnished.

2 types of cantilevers are available to meet grade crossing protection requirements.

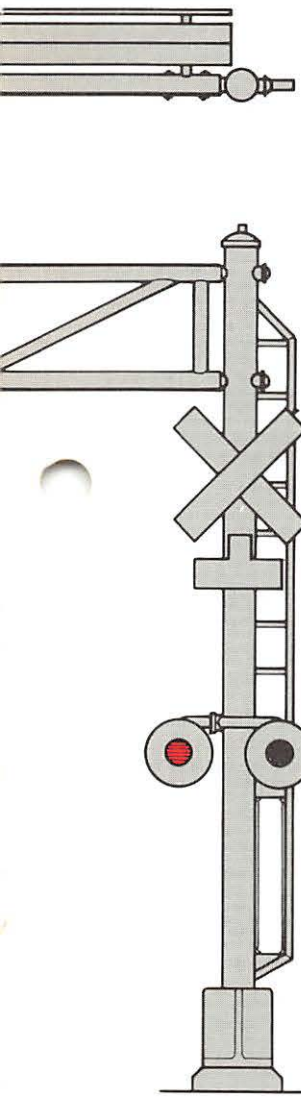

Trombone (adjustable) length Cantilever

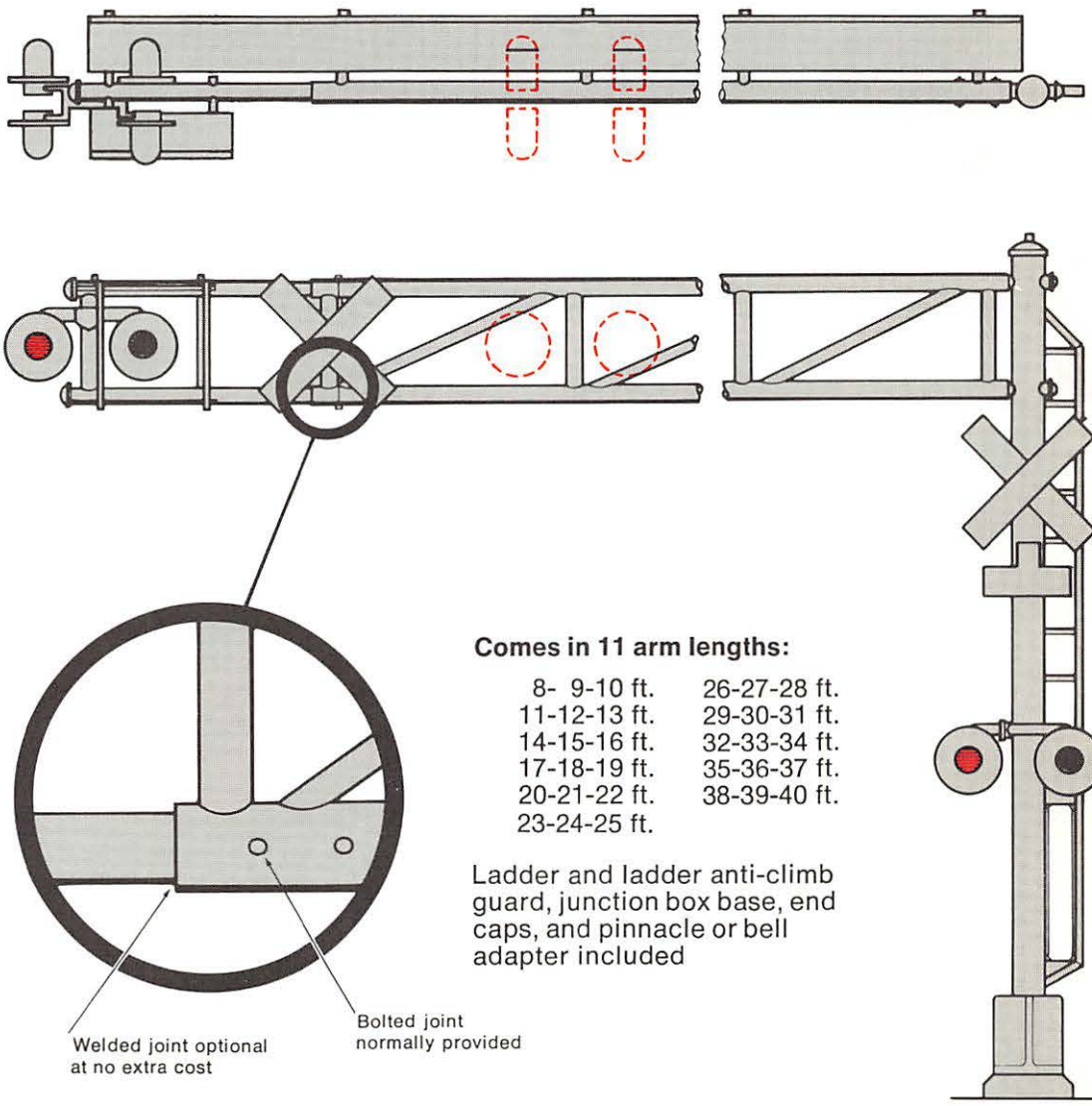

Comes in 11 arm lengths:

8- 9-10 ft.	26-27-28 ft.
11-12-13 ft.	29-30-31 ft.
14-15-16 ft.	32-33-34 ft.
17-18-19 ft.	35-36-37 ft.
20-21-22 ft.	38-39-40 ft.
23-24-25 ft.	

Ladder and ladder anti-climb guard, junction box base, end caps, and pinnacle or bell adapter included

Grip-Strut® Safety grating supplied for nominal extra charge.

Both types of available safety grating comply with OSHA requirements.

ORDERING INFORMATION

We suggest you copy this page and show required arm length, number and direction of lights, signs, bells and other devices.

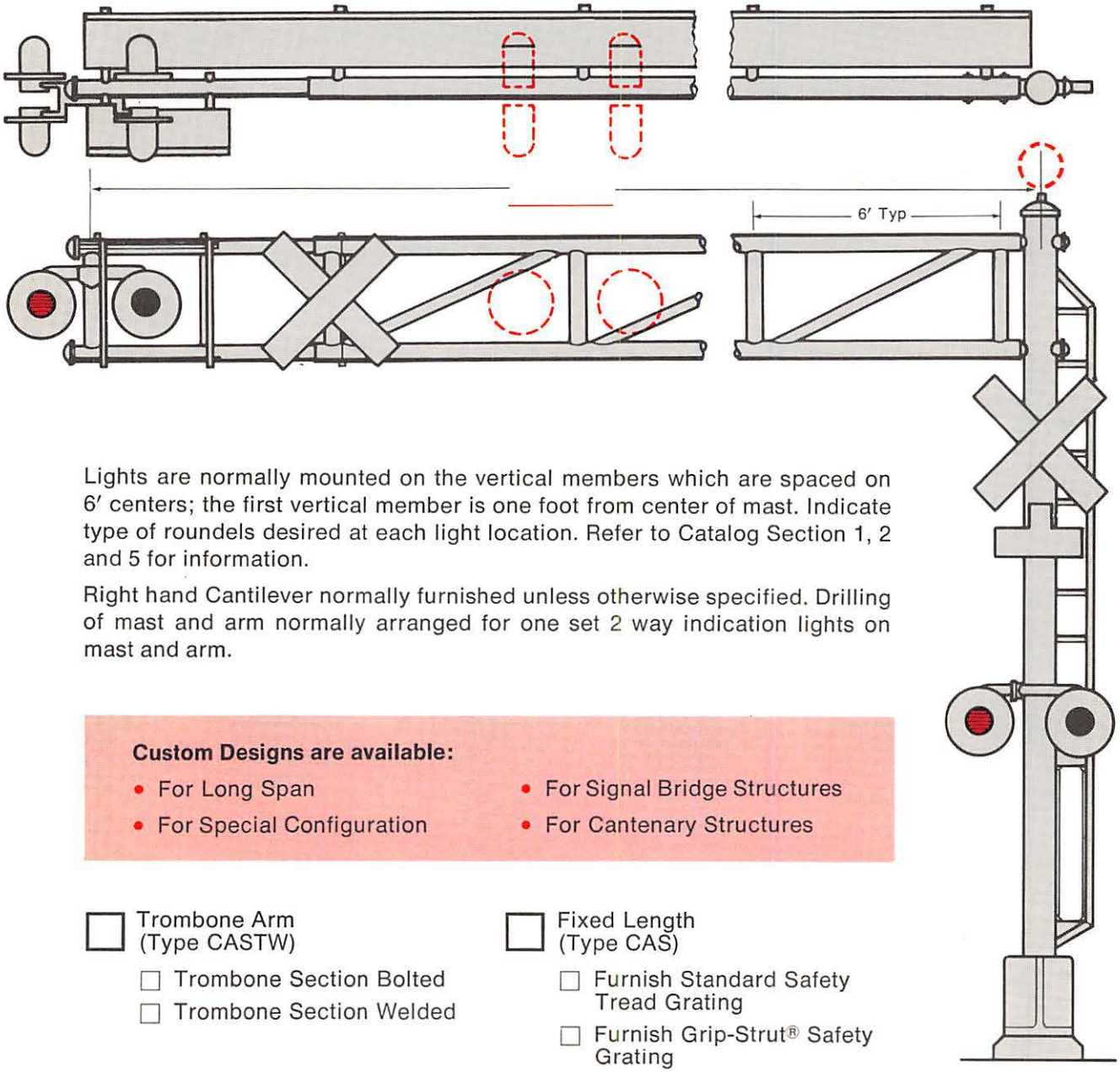

Lights are normally mounted on the vertical members which are spaced on 6′ centers; the first vertical member is one foot from center of mast. Indicate type of roundels desired at each light location. Refer to Catalog Section 1, 2 and 5 for information.

Right hand Cantilever normally furnished unless otherwise specified. Drilling of mast and arm normally arranged for one set 2 way indication lights on mast and arm.

Custom Designs are available:

- For Long Span
- For Special Configuration
- For Signal Bridge Structures
- For Cantenary Structures

☐ Trombone Arm (Type CASTW)

- ☐ Trombone Section Bolted
- ☐ Trombone Section Welded

☐ Fixed Length (Type CAS)

- ☐ Furnish Standard Safety Tread Grating
- ☐ Furnish Grip-Strut® Safety Grating

WESTERN-CULLEN DIVISION
FEDERAL SIGN & SIGNAL CORPORATION
2700 West 36th Place • Chicago, Illinois 60632

Printed in U.S.A.

MODEL 10 SIGNAL — AUTOMATIC CROSSING GATES — GATE ARMS

CONTENTS

	Page No.
General Information	3-2 to 3-7
Model 10 Highway Crossing Gate Signal Complete	3-8 to 3-12
Model 10 Highway Crossing Gate Signal Parts	
Roadway Arms	3-14 to 3-23
Sidewalk Arms	3-24 to 3-27
Hinged-Tongue Roadway Arms	3-28
Buffer Leg	3-29
Gate Lights	3-30 & 3-31
Gate Arm Supports	3-32
Mechanism Supports	3-33
Gate and Couterweight Arms	3-34 to 3-36
Junction Box Cross Arm	3-37 to 3-45
Junction Box Clamp Base	3-46 & 3-47
Supporting Brackets	3-48 & 3-49
Extension Brackets	3-50
Model 10A Highway Crossing Signal Complete	3-51 to 3-62
Roadway Arms	3-56 to 3-59
Gate Arm Supports	3-54 & 3-55
Gate Mechanism 3590	3-62
Gate Mechanism 3593	(Consult Factory)
Gate Mechanism 3564	(Consult Factory)
Gate Mechanism 3566	(Consult Factory)
Gate Mechanism 3567	3-141 to 3-151
Gate Mechanism 3568	3-155 to 3-165
Gate Mechanism 3570	3-201 to 3-208
Gate Arm, Fiberglass	3-300

WC Hayes
WESTERN-CULLEN-HAYES, Inc.
2700 West 36th Place • Chicago, Illinois 60632 • Telephone: 312/254-9600 • Telex 25-3206

GENERAL

Model 10 Signals meet, in every respect, the specifications and requirements of the Association of American Railroads, Communication and Signal Section, and of every State having specifications or regulations applying to grade-crossing protection, as well as those of the Board of Transport Commissioners for Canada.

They are especially designed for automatic control by approaching trains and for manual supervision imposed upon automatic control.

Suggested circuits for the automatic control of Model 10 Signals are shown in the instruction booklets. These follow the principles and recommended practices of the Association of American Railroads, Communication and Signal Section, and embody the use only of relays and other devices meeting the specifications and requirements of that organization.

Contributing largely to the instant success of the automatic operation of the Model 10 Signal, when first introduced in June, 1936, was the provision of a prewarning by flashing lights for a period of 3 to 5 seconds before the gate arm starts to descend and the slow, even descent of the gate arm to the horizontal position in a period of 10 to 15 seconds. Even when these signals are manually controlled this prewarning period is retained. This allows ample time for highway traffic to pass the gate after the lights start to flash, or to come to a stop before reaching the gate.

The three electric lights on the gate arm provide an arrestive, highly visible horizontal row of lights in the path of approaching highway vehicles. At all times when the gate arm is in a position to obstruct traffic the tip light burns steadily and the other two lights are caused to alternately flash in unison with the flashing lights on the signal mast.

Many variations from the typical circuits are used to meet local conditions, including timing circuits to adjust the warning period to the speed of approaching trains and thus to limit the time the gates would be down for slower trains. Circuits are frequently introduced to prevent obstruction of highway traffic by trains standing near the crossing, as occurs during station stops.

Assistance in the design of control circuits to meet special conditions will be gladly given by our Engineers, upon request.

MODEL 10 SIGNALS

The Model 10 Signal assemblies, for which ordering reference data is given in this catalog section, are those most commonly used to meet the conditions encountered in the vast majority of locations. Special assemblies can be arranged to meet various unusual requirements. These may include extension brackets to position the flashing lights so as to project the light beams along side streets, or other necessary features required by the circumstances.

In standard Model 10 Signal assemblies the signs, flashing lights and mechanism are mounted on one 5 inch pipe mast with junction-box type base and a bell or pinnacle. Where cantilever type flashing light signals are required, the gate mechanism and gate arm are frequently mounted on a separate short mast located between the cantilever signal and the track, often on a common concrete foundation. However, where clearance does not permit this arrangement, assemblies with offset cantilever brackets are supplied.

Our Engineering Department is at all times glad to cooperate in the design of special assemblies to meet unusual conditions. Given scale plans or details of a crossings, where standard assemblies do not meet the requirements, we will furnish drawings illustrating the arrangement recommended.

MECHANISMS

Five types of mechanisms are available for operation of roadway gate arms, as illustrated. . . . . Both Types 3567 and 3568 are designed to operate the gate arm to the clear, 90°, position by power and from the clear position to the 45° position, descending, by power and from the 45° position to the horizontal position by gravity. The characteristics and a full description of the mechanisms will be found in Instruction Booklet accompanying each mechanism. Also see 3570, 3590, 3591. Series Mechs.

Each of the above mechanisms may be had with a kit for the operation of a sidewalk arm. This sidewalk arm operating shaft and internal actuating parts is supplied as a kit, which can be easily installed.

All mechanisms are provided with auxiliary circuit controller contacts for indication of gate arm position, for flashing and gate arm light control, to stop the bell from ringing after the gate arm is down, etc.

The same gate arms and fittings are used with either Type 3567 or Type 3568 mechanism. The counterweight and gate support arms for roadway arms attach to the splined mechanism shaft. The sidewalk arm support casting, when used, attaches to a square end shaft.

Also see Types 3590 (WC) and Type 3591 (WC) pages 3-62 thru 3-300.

COUNTERWEIGHTING AND GATE ARM TORQUE

These mechanisms are of the powered-down type, but the counterweights supplied with each Model 10 Signal are of correct weight to provide down torque required for proper operation of the gate arm from clear to horizontal position by gravity. The counterweights and mounting arrangement are so designed that they may be adjusted as required, without dismantling, to obtain horizontal and clear position torque values as required for each arm length.

Proper counterweighting and torque values are essential elements of Model 10 Signal design. Recommended torque values based on experience, tests and calculations of wind resistance, for gate arms of various lengths, are given in tables in instruction booklets furnished with each mechanism.

Speed Table For Crossing Signal Starts

Seconds		10	15	20	25	30	35	40	45	50	55	60
Miles Per Hour	Feet Per Second	Distance Traveled in Feet										
1	1.46	14.6	22.0	29.3	36.6	44.0	51.3	58.6	66.0	73.3	80.6	88.0
2	2.93	29.3	44.0	58.6	73.3	88.0	102.6	117.3	132.0	146.6	161.3	176.0
3	4.4	44	66	88	110	132	154	176	198	220	242	264
4	5.86	58.6	88	117.3	146.6	176	205.3	334.6	264	293.3	322.6	352
5	7.3	73	110	147	183	220	257	293	330	367	403	440
10	14.6	146	220	293	366	440	513	587	660	733	807	880
15	22.0	220	330	440	550	660	770	880	990	1,100	1,210	1,320
20	29.3	293	440	587	733	880	1,027	1,173	1,320	1,467	1,613	1,760
25	36.7	367	550	733	917	1,100	1,283	1,467	1,650	1,833	2,017	2,200
30	44.0	440	660	880	1,100	1,320	1,540	1,760	1,980	2,200	2,420	2,640
35	51.3	513	770	1,027	1,283	1,540	1,797	2,053	2,310	2,567	2,823	3,080
40	58.7	587	880	1,173	1,467	1,760	2,053	2,347	2,640	2,933	3,227	3,520
45	66.0	660	990	1,320	1,650	1,980	2,310	2,640	2,970	3,300	3,630	3,960
50	73.3	733	1,100	1,467	1,833	2,200	2,567	2,933	3,300	3,667	4,033	4,400
55	80.7	807	1,210	1,613	2,017	2,420	2,823	3,227	3,630	4,033	4,437	4,840
60	88.0	880	1,320	1,760	2,200	2,640	3,080	3,520	3,960	4,400	4,840	5,280
65	95.3	953	1,430	1,907	2,383	2,860	3,337	3,813	4,290	4,767	5,243	5,720
70	102.7	1,027	1,540	2,053	2,567	3,080	3,593	4,107	4,620	5,133	5,647	6,160
75	110.0	1,100	1,650	2,200	2,750	3,300	3,850	4,400	4,590	5,500	6,056	6,600
80	117.3	1,173	1,760	2,347	2,933	3,520	4,107	4,693	5,280	5,867	6,453	7,040
85	124.7	1,247	1,870	2,493	3,117	3,740	4,363	4,987	5,610	6,233	6,858	7,480
90	132.0	1,320	1,980	2,640	3,300	3,960	4,620	5,280	5,940	6,600	7,260	7,920
95	139.3	1,393	2,090	2,787	3,483	4,180	4,877	5,573	6,270	6,967	7,663	8,360
100	146.7	1,467	2,200	2,933	3,667	4,400	5,133	5,867	6,600	7,333	8,067	8,800
105	154.0	1,540	2,310	3,080	3,850	4,620	5,390	6,160	6,930	7,700	8,470	9,240
110	161.3	1,613	2,420	3,227	4,033	4,840	5,647	6,453	7,260	8,067	8,873	9,680
115	168.6	1,686	2,530	3,373	4,217	5,060	5,903	6,747	7,590	8,434	9,277	10,120
120	176.0	1,760	2,640	3,520	4,400	5,280	6,160	7,040	7,920	8,800	9,680	10,560
125	183.3	1,833	2,750	3,667	4,583	5,500	6,417	7,334	8,250	9,167	10,084	11,000
130	190.7	1,907	2,860	3,813	4,767	5,720	6,673	7,627	8,580	9,534	10,487	11,440

NOTE: Where length of track circuit is known, time in seconds can be determined by dividing its length by "Feet Per Second" at train speed selected.

* Does not allow for drop-away time of relays.

Information Desired With Inquiry For Complete Model 10 Signal Installation

We are pleased to furnish engineering information and to quote on all materials required for installations of Model 10 Signals. Where possible, inquiries should be accompanied by a sketch or scale track plan showing location of highway.

The following information is especially desired:

1. Width of roadway or length of roadway gate arm required.
2. If sidewalk arm is required, length thereof.
3. Length of approach track circuit required each side of highway to provide 20 seconds warning for fastest train, or information as to speeds of trains operated over the crossing.
4. If for double track road, specify if protection shall be provided for reverse traffic.
5. What special operating conditions exist within the area?
6. Details of any switches within the approach sections.
7. Circuits of any signaling now in place which will be affected by the installation of crossing protection.
8. Whether diesel or electric propulsion railroad.
9. What electric power is available at crossing?
10. Weight and type of rail, whether four or six hole splice bars and rail drilling.
11. Type of track ballast (rock, gravel, cinders or other material).
12. Type of highway surface or pavement.
13. If electric propulsion railway, specify what propulsion voltage is used and whether A.C. or D.C. If A.C., specify frequency.
14. If electric propulsion railway, state the normal and maximum return current in rails.
15. If electric propulsion railway, specify if single rail or two rail track circuits are preferred.
16. Whether spare space on pole line is available for extending electric power to ends of track circuits.

Suggested Roadway Gate Arm Light Spacing

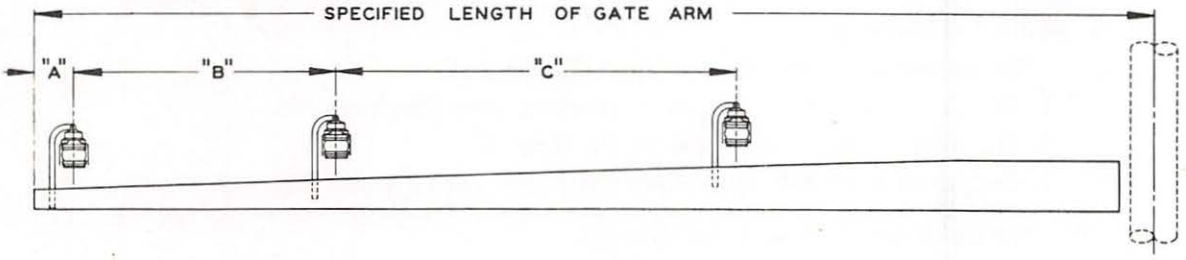

Specified Length of Gate Arm	Dimension "A"	Dimension "B"	Dimension "C"
14 Ft.	6″	36″	5′–0″
15 Ft.	18″	36″	5′–0″
16 Ft.	24″	36″	5′–0″
17 Ft.	24″	36″	5′–0″
18 Ft.	28″	41″	5′–0″
19 Ft.	28″	41″	5′–0″
20 Ft.	28″	4′–0″	5′–0″
21 Ft.	28″	4′–0″	5′–0″
22 Ft.	28″	4′–0″	5′–0″
23 Ft.	28″	4′–0″	5′–0″
24 Ft.	28″	5′–0″	5′–0″
25 Ft.	28″	5′–0″	5′–0″
26 Ft.	28″	5′–0″	5′–0″
27 Ft.	28″	5′–0″	5′–0″
28 Ft.	28″	5′–0″	5′–0″
29 Ft.	36″	6′–0″	6′–0″
30 Ft.	36″	6′–0″	6′–0″
31 Ft.	36″	6′–0″	6′–0″
32 Ft.	36″	7′–6″	7′–6″
33 Ft.	36″	7′–6″	7′–6″
34 Ft.	36″	7′–6″	7′–6″
35 Ft.	36″	9′–0″	9′–0″
36 Ft.	36″	9′–0″	9′–0″
37 Ft.	36″	9′–0″	9′–0″
38 Ft. and Over	36″	10′–0″	10′–0″

Suggested Foundation Designs For Model 10 Signals Using No. 2149-11 Junction Box Type Base

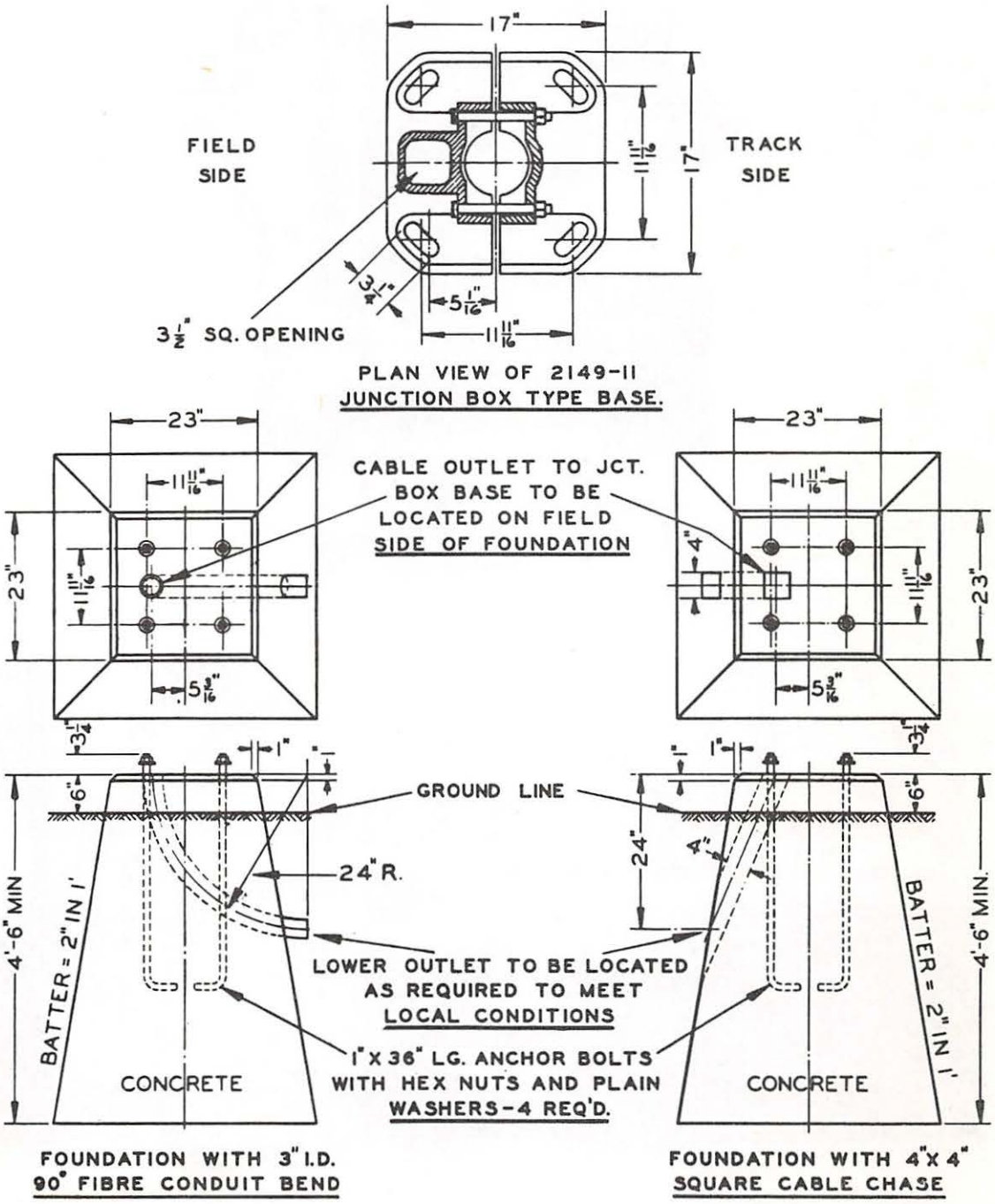

Model 10 Signal Mechanism

No. 3567-131

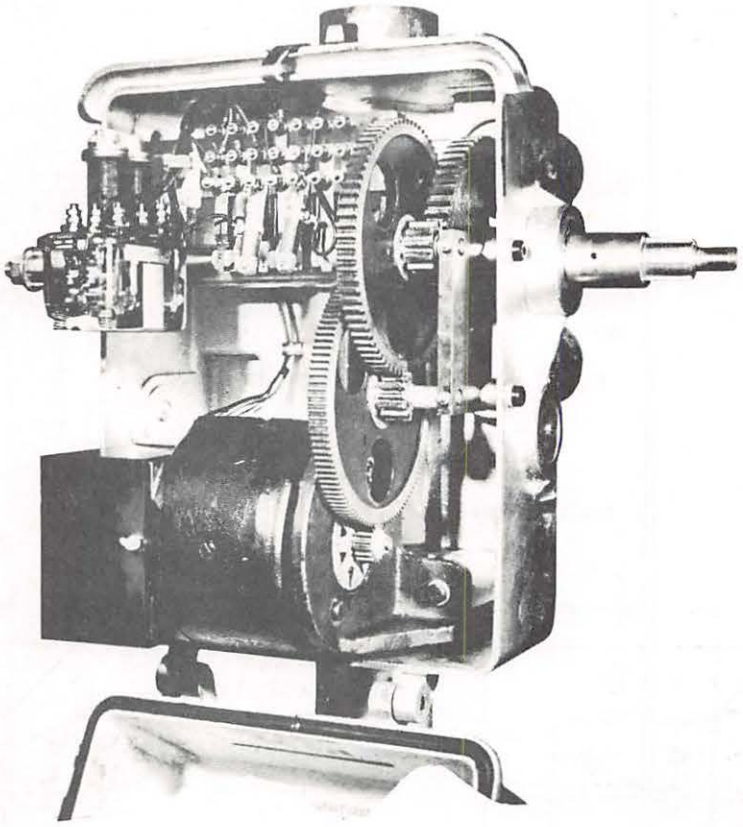

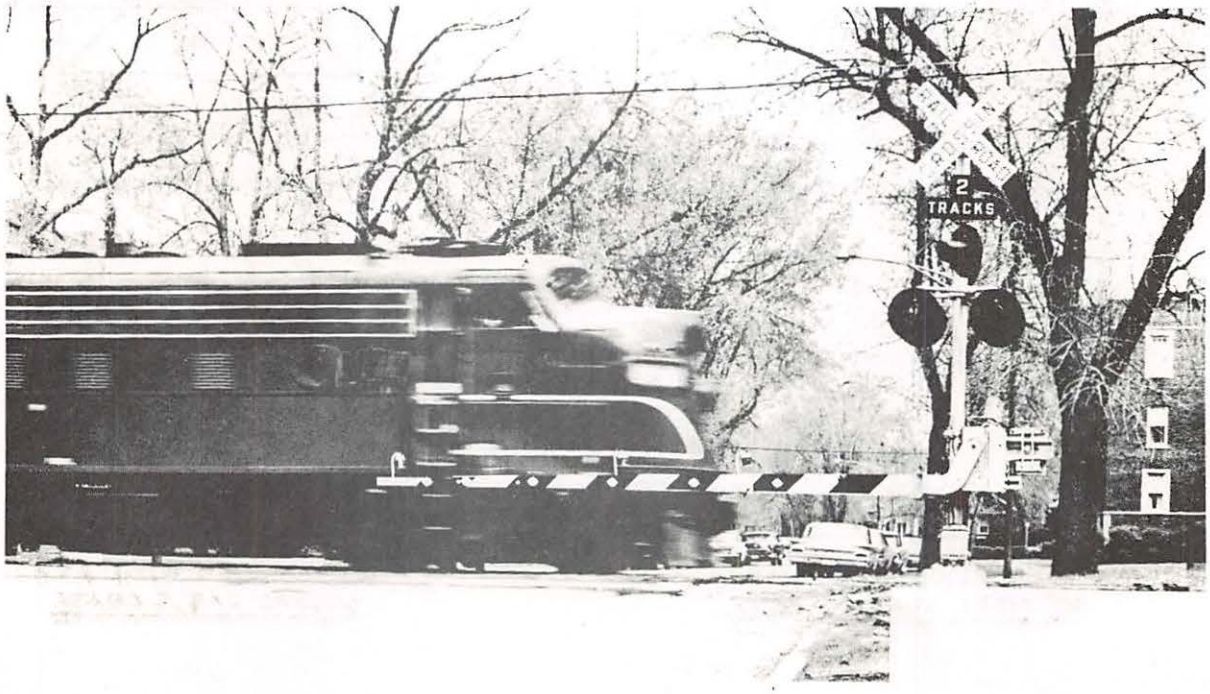

Model 10 Signal Mechanism

No. 3568-132 (With Sidewalk Shaft)

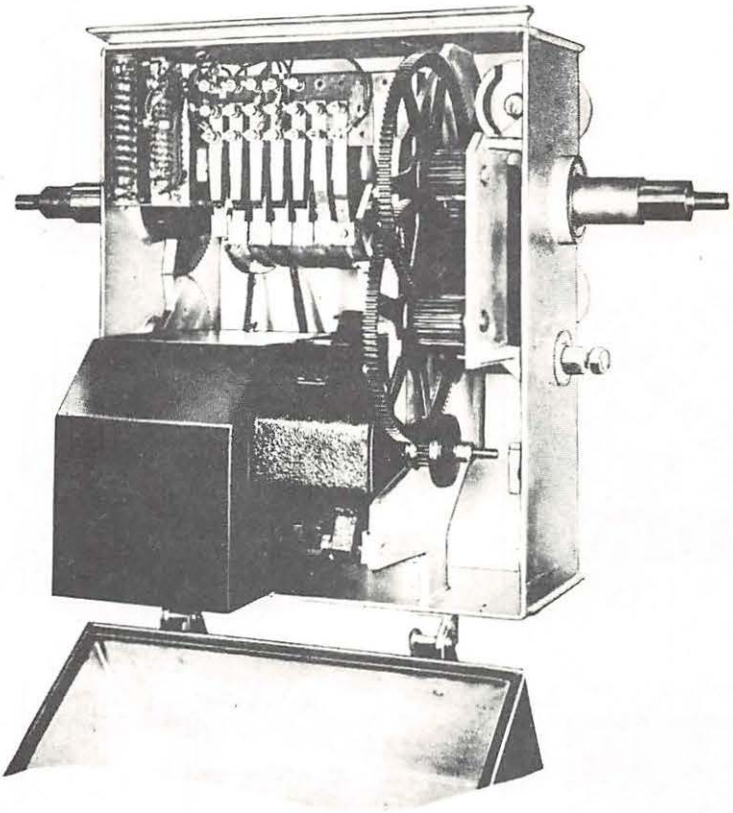

Model 10 Signal Assembly
For Roadway Arms 14' to 38'

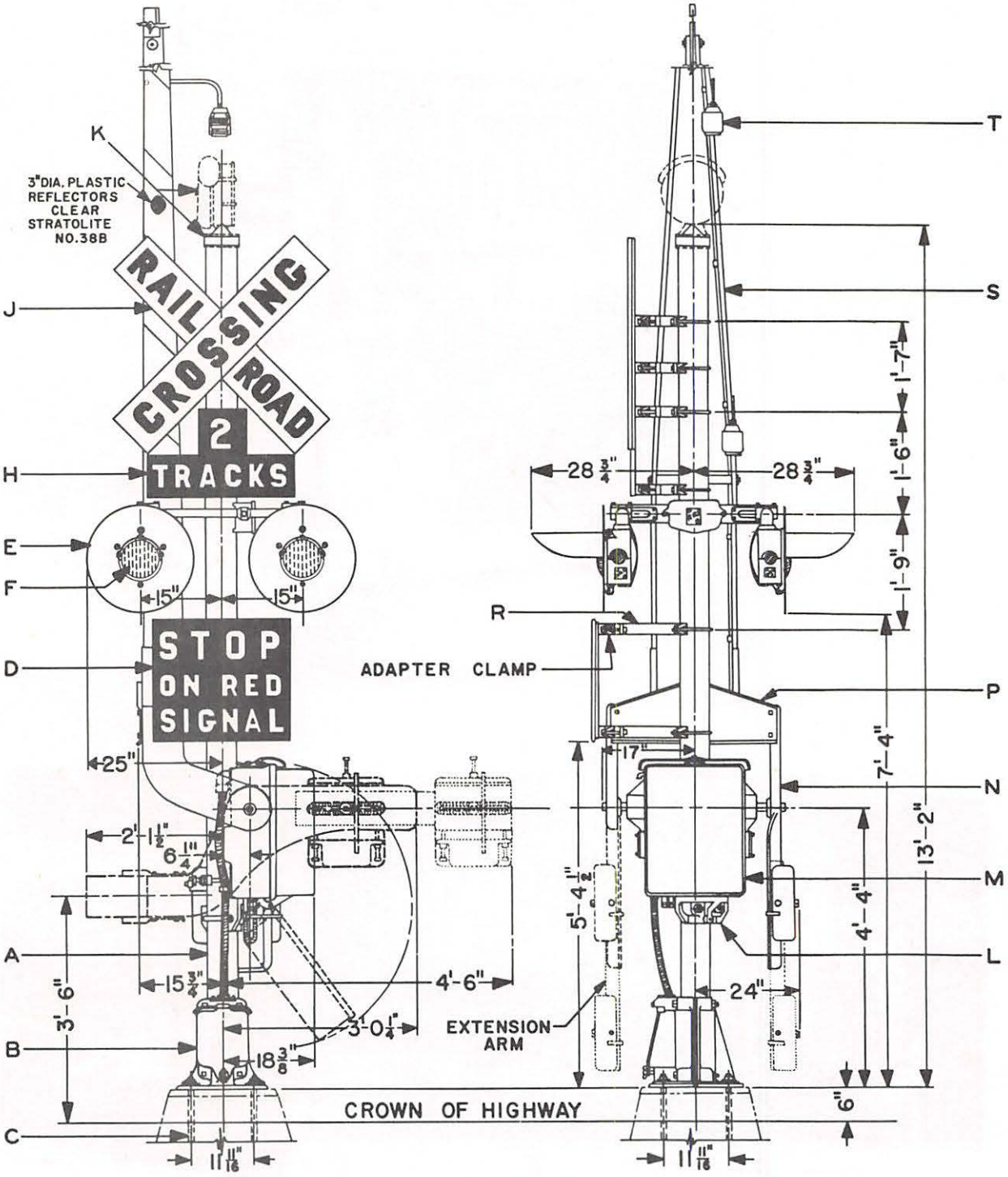

ASSEMBLY WITH 18'-24' ARMS PER —— LINES
ASSEMBLY WITH 25'-30' ARMS PER ---- LINES
ASSEMBLY WITH 31'-38' ARMS PER ····· LINES

Ref. A or Ref. B

Assembly drawings of Model 10 Signals with roadway arm 39' to 44' in length will be furnished on request.

Model 10 Signal Assembly With Sidewalk Arm For Roadway Arms 14' to 38'

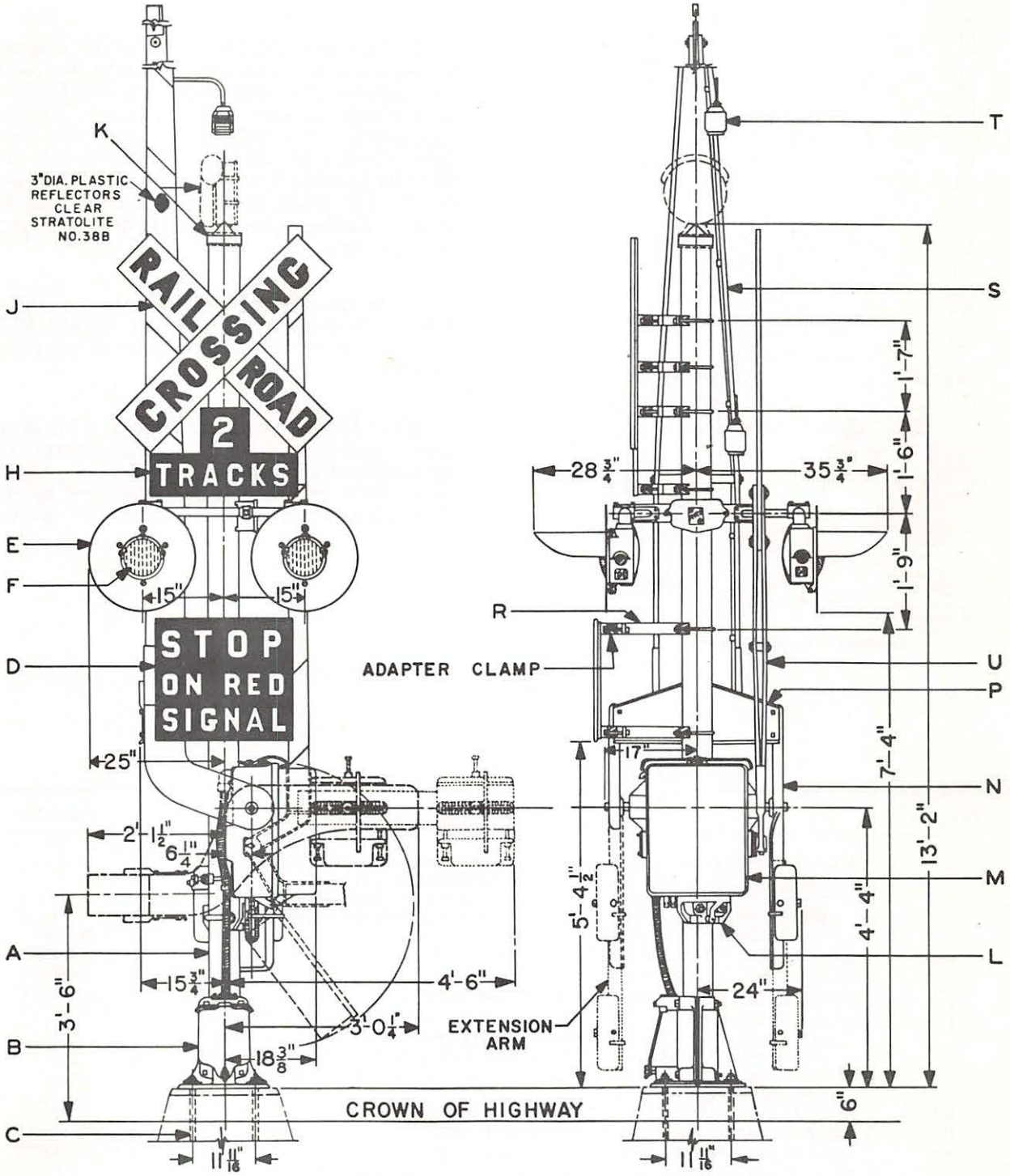

ASSEMBLY WITH 18'-24' ARMS PER —— LINES
ASSEMBLY WITH 25'-30' ARMS PER ---- LINES
ASSEMBLY WITH 31'-38' ARMS PER ····· LINES

Ref. A or B with Ref. C

Assembly drawings of Model 10 Signals with roadway arm 39' to 44' in length will be furnished on request.

Model 10 Signal Assembly

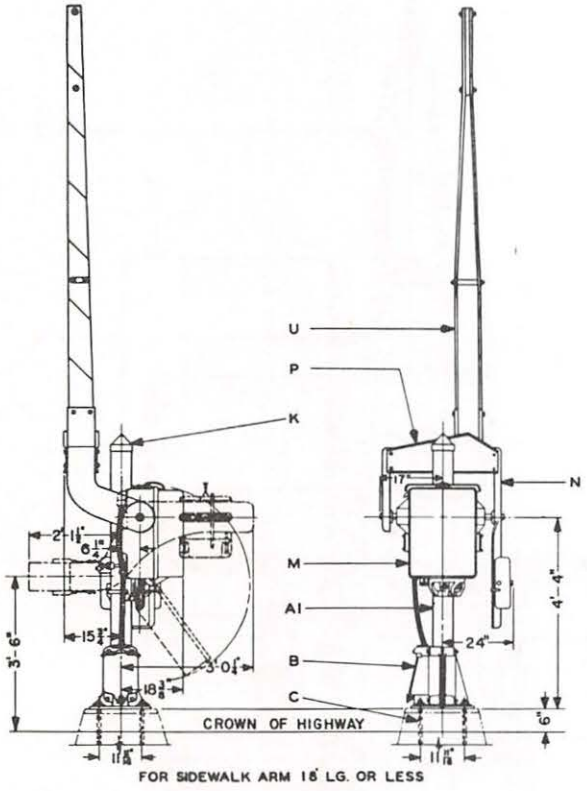

Ref. D

By far the majority of Model 10 Highway Crossing Signal installations require two Model 10 Highway Crossing Signal Assemblies; one with a bell and one with a pinnacle, although frequently two bells are used. Western's 3567-131 or 3568-131 mechanism with gate arm, 970-204 flashing light units, with 5323P roundels, 5″ I.D. mast, junction box type base and reflex-reflecting sheet type signs, meet most requirements.

Below are ordering references for these most frequently used assemblies. See Page 3-13 for information for ordering variations from these assemblies.

When sidewalk arm is required, a kit is supplied consisting of shaft, actuating parts, arm, arm support and brackets for mounting flashing light units on junction box cross arm to clear the sidewalk arm in the clear or 90° position.

Ref. No.	Description	Piece No.
A	Model 10 Highway Crossing Signal, complete with Type 3567-131 mechanism, two-way indication flashing light assemblies, 222FR bell and signs. (Specify numeral on track sign, length of Roadway Arm, from tip of arm to center of mast, and voltage and wattage of incandescent electric lamps, if required)	A-735
A1	Same as Ref. A, but with pinnacle in place of bell	A-735P
A2	Same as Ref. A, less "Stop On Red Signal" sign	A-735L
A3	Same as Ref. A1, less "Stop On Red Signal" sign	A-735PL
B	Model 10 Highway Crossing Signal, complete with Type 3568-131 mechanism, two-way indication flashing light assemblies, 222FR bell and signs. (Specify numeral on track sign, length of Roadway Arm, from tip of arm to center of mast, and voltage and wattage of incandescent electric lamps, if required)	A-741
B1	Same as Ref. B, but with pinnacle in place of bell	A-741P
B2	Same as Ref. B, less "Stop On Red Signal" sign	A-741L
B3	Same as Ref. B1, less "Stop On Red Signal" sign	A-741PL
C	Sidewalk Arm kit complete for Type 3567-131 mechanism. (Specify length of arm)	3567-140
C1	Same as Ref. C, but for Type 3568-131 mechanism	3568-140
D	Sidewalk Gate Assembly, complete with Type 3567-131 mechanism	A-743
D1	Same as Ref. D, but with Type 3568-131 mechanism	A-744
	See Page 3-13 for information for ordering commonly used variations.	

Model 10 Signal Assembly

When ordering assemblies other than are shown on Pages 3-10 to 3-12 please use the reference data below, enumerating components required.

If extra light assemblies are called for, specify degree of angle to right or left of main lights.

We will gladly furnish plans and information for special assemblies, including supporting brackets as shown on Page 3-48 and 3-49, Marker Lights as shown on Page 1-26, etc.

Ref. No.	Description	Piece No.
A	Pipe Mast 5" I.D. x 13'-0" Lg.	715-24
A1	Pipe Mast 5" I.D. x 6'-0" Lg.	715-16
B	Base (See Pages 3-46 and 3-47)	
C	Anchor Bolts 1" x 36"	11079
D	"Stop On Red Signal" sign (See Section 1, Pages 1-20 and 1-21)	
E	Flashing Light Assembly (See Section 1, Pages 1-15 to 1-19)	
	For Gate Assembly only (See Pages 3-37 to 3-45)	
F	Roundels (See Section 1, Page 1-14)	
G	Specify Voltage and Wattage of Lamps	
H	"Number of Tracks" sign (See Section 1, Pages 1-22 and 1-23)	
J	"Railroad Crossing" sign (See Section 1, Pages 1-24 and 1-25)	
K	Bells (See Section 5)	
	For Pinnacle (See Section 1, Pages 1-10 and 1-11)	
L	Mechanism Support (See Page 3-33 for Details)	3565-380A
M	Gate Mechanism 3567 (See Pages 3-141 to 3-151)	
M	Gate Mechanism 3568 (See Pages 3-155 to 3-165)	
N	Gate and Counterweight Arms (See Pages 3-34 and 3-35)	
P	Gate Arm Support (See Page 3-32)	
R	Extension Bracket (See Page 3-50)	
S	Gate Arm (See Pages 3-15 to 3-23)	
T	Gate Lights (See Pages 3-30 and 3-31)	
U	Sidewalk Gate Arms (See Pages 3-24 to 3-27)	
V	Sidewalk Gate Support (See Page 3-36)	
W	Gate Light Jct. Boxes (See Pages 3-14 and 3-15)	
X	Buffer Leg (See Page 3-29)	

Roadway Arms, Extendable Type

14' MINIMUM 18' MAXIMUM
ADJUSTABLE IN ONE-FOOT INCREMENTS

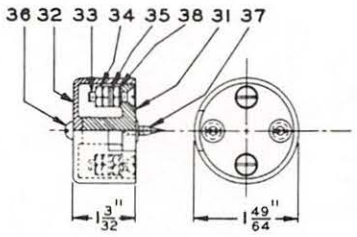

Ref. W

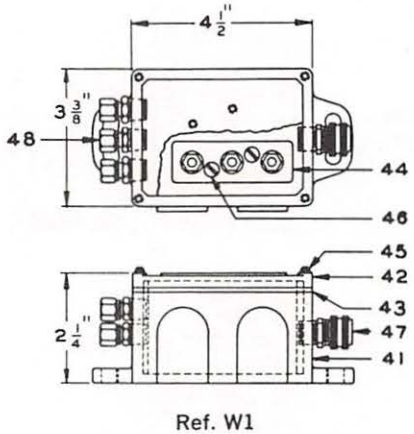

Ref. W1

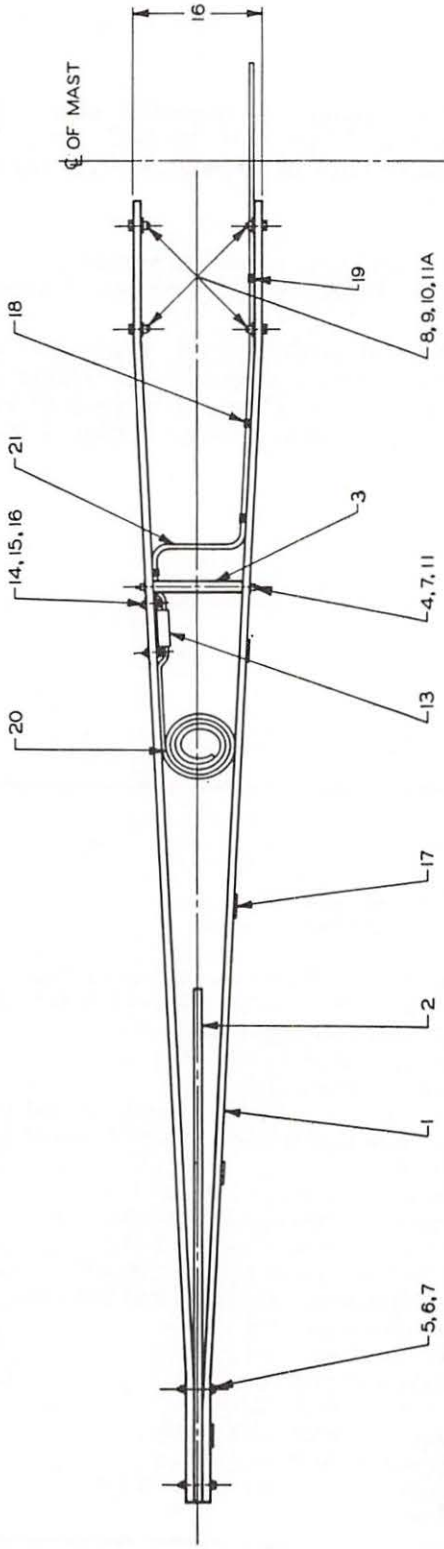

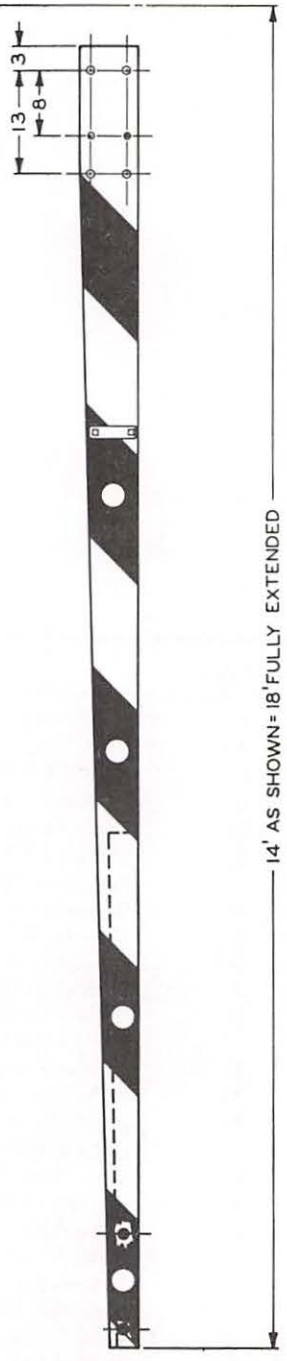

Ref. S

Roadway Arms, Extendable Type

14' MINIMUM 18' MAXIMUM
ADJUSTABLE IN ONE-FOOT INCREMENTS

Ref. No.	Description	Piece No.
S	Assembly of Roadway Arm with wiring and reflectors, less gate lights	3565-331
S1	Same as Ref. S, less wiring and reflectors	3565-361
S2	Wiring Harness Only. (Includes all material for wiring roadway arm for three gate lights)	3565-341
W	Type 3561 Terminal Block Complete, Bakelite	3561-196
W1	Type 3561 Junction Box Complete, Aluminum	3561-71D
	REPLACEMENTS PARTS	
1	Base Board (Specify Track or Field Side)	3565-54-
2	Tongue	3565- 51
3	Spacer Block	3565-55
4	Through Stud	3562-66EH
5	Machine Bolt, 3/8"-16 x 3" lg. hex. hd., stl.	
6	Washer, 7/16" I.D. x 1½" O.D. stl.	
7	Square Nut, 3/8"-16, stl.	
8	Machine Bolt, ½"-13 x 2" lg., hex. hd., stl.	
9	Hex. Nut, ½"-13, stl.	
10	Spring Lock Washer, ½", stl.	
11	Aluminum Washer Plate	3562-77A
11A	Aluminum Washer Plate	3562-71
13	Junction Box Assembly. (For Details see Ref. 41 to 48 below)	3561-71D
14	Machine Bolt, 5/16"-18 x 1¾" lg., hex. hd., stl.	
15	Hex. Nut, 5/16"-18 x 1¾" lg., hex. hd., stl.	
16	Washer, 5/16" plain, stl.	
17	3" Diameter Plastic Reflector, with mounting screws	38B
18	Aluminum Cable Clip for one 3-Conductor Cable	3562-96-1
19	Nylon Cable Clip for one 3-Conductor Cable	1953-7A
20	2-Conductor Cable, In Bulk	90942
21	3-Conductor Cable, In Bulk	90943
	PARTS NOT ILLUSTRATED	
22	Aluminum Cable Clip for three 2-Conductor Cables	
22A	Same as Ref. 22, but for two 2-Conductor Cables	
22B	Same as Ref. 22, but for one 2-Conductor Cable	
23	Wood Screws for above clips, No. 8 x ¾" rd. hd., brass	
24	½" Cable Grip, for one 3-Conductor Cable	DB-990
25	Pipe Reducer, ¾" to ½", for Ref. 24	
	REPLACEMENTS PARTS FOR REF. W AND W1	
31	Terminal Block, Bakelite	3561-197A
32	Cover, Bakelite	3561-198
33	No. 10-32 x 7/8" Lg. fl. hd. mach. screw, brass	
34	No. 10-32 Hex. Nut, brass	
35	No. 10 Plain Washer, brass	
36	No. 10-32 x ½" Lg. rd. hd. mach. screw, brass	
37	No. 6 x ¾" Lg. fl. hd. wood screw, brass	
38	No. 10 Internal Everlock Washer, steel	
41	Box, cast aluminum	3561-75J
42	Cover, cast aluminum	3561-76
43	Gasket	3561-77A
44	Terminal Block	1005-102
45	No. 8-32 x ¾" Lg. rd. hd. mach. screw & lock washer, brass	
46	No. 8-32 x 3/8" Lg. rd. hd. mach. screw, brass	
47	3/8" Cable Grip, for one 3-Conductor Cable	DB-938
48	Compression Connector	1580-7

Roadway Arms, Extendable Type

19′ MINIMUM 24′ MAXIMUM
ADJUSTABLE IN ONE-FOOT INCREMENTS

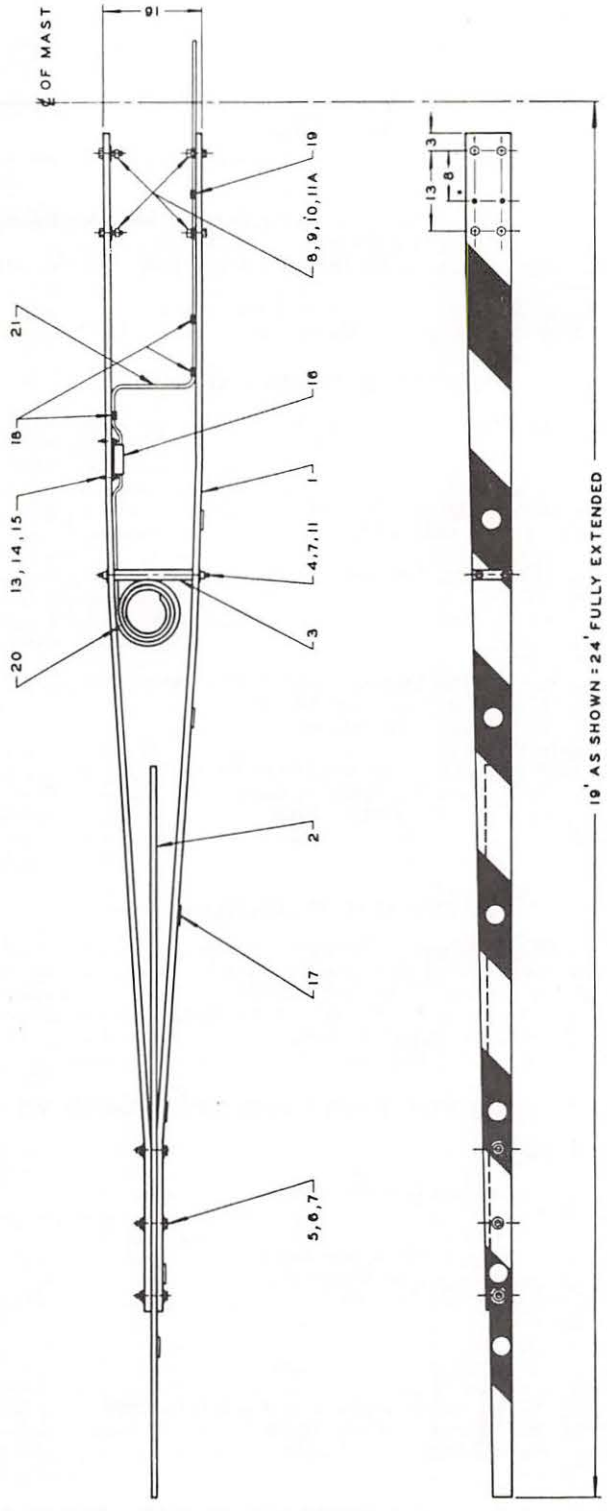

Ref. S3

Roadway Arms, Extendable Type

19′ MINIMUM 24′ MAXIMUM
ADJUSTABLE IN ONE-FOOT INCREMENTS

Ref. No.	Description	Piece No.
S3	Assembly of Roadway Arm with wiring and reflectors, less gate lights	3565-332
S4	Same as Ref. S3, less wiring and reflectors	3565-362
S5	Wiring Harness Only. (Includes all material for wiring roadway arm for three gate lights)	3565-342
	REPLACEMENT PARTS	
1	Base Board (Specify Track or Field Side)	3565-54-16
2	Tongue	3565-52B
3	Spacer Block	3565-55
4	Through Stud	3562-66EH
5	Machine Bolt, 3/8″-16 x 3″ lg. hex. hd., stl.	
6	Washer, 7/16″ I.D. x 1½″ O.D., stl.	
7	Square Nut, 3/8″-16, stl.	
8	Machine Bolt, ½″-13 x 2″ lg., hex. hd., stl.	
9	Hex. Nut, ½″-13, stl.	
10	Spring Lock Washer, ½″, stl.	
11	Aluminum Washer Plate	3565-56
11A	Aluminum Washer Plate	3562-71
13	Machine Bolt, 5/16″-18 x 1¾″ lg., hex. hd., stl.	
14	Hex. Nut, 5/16″-18, stl.	
15	Washer, 5/16″, plain, stl.	
16	Junction Box Assembly. (For Details see Pages 3-14 and 3-15)	3561-71D
17	3″ Diameter Plastic Reflector, with mounting screws	38B
18	Aluminum Cable Clip for one 3-Conductor Cable	
19	Nylon Cable Clip for one 3-Conductor Cable	1953-7A
20	2-Conductor Cable, In Bulk	90942
21	3-Conductor Cable, In Bulk	90943
	PARTS NOT ILLUSTRATED	
22	Aluminum Cable Clip for three 2-Conductor Cables	
22A	Same as Ref. 22, but for two 2-Conductor Cables	
22B	Same as Ref. 22, but for one 2-Conductor Cable	
23	Wood Screws for above clips, No. 8 x ¾″, rd. hd., brass	
24	Terminal Block and Mounting screws (For Details see Pages 3-14 and 3-15)	3561-196
25	½″ Cable Grip, for one 3-Conductor Cable	DB-990
26	Pipe Reducer, ¾″ to ½″, for Ref. 25	

Roadway Arms, Extendable Type

25′ MINIMUM 30′ MAXIMUM
ADJUSTABLE IN ONE-FOOT INCREMENTS

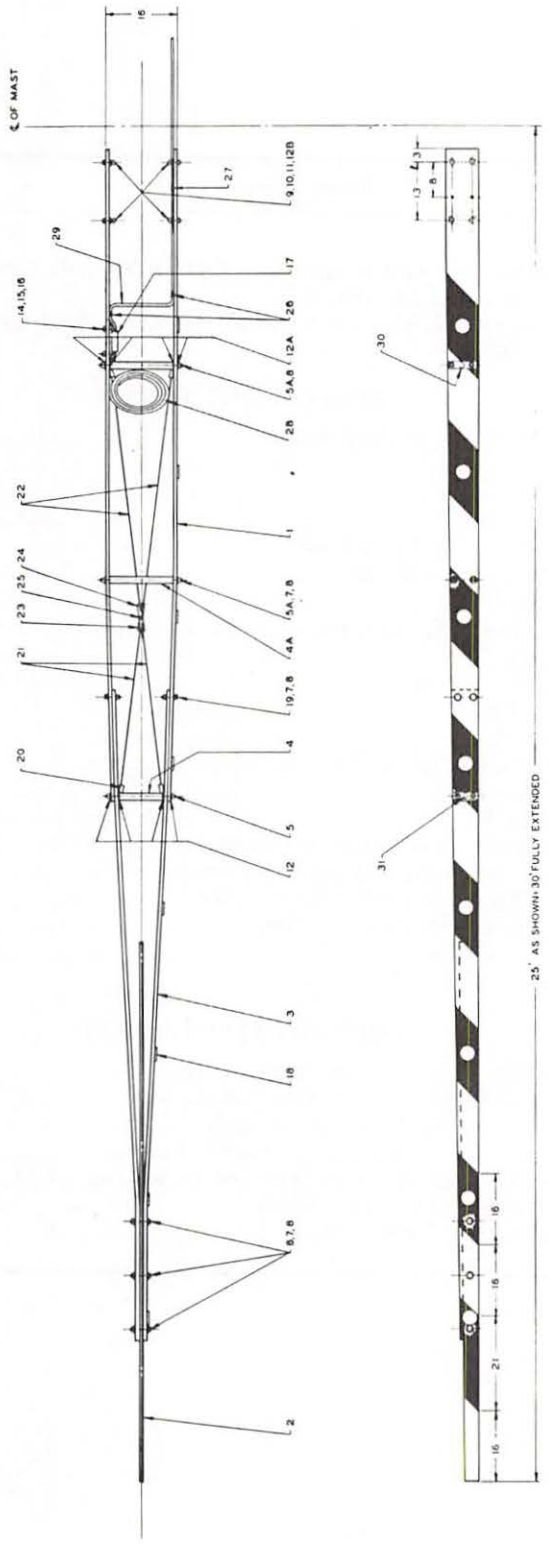

Ref. S6

Roadway Arms, Extendable Type

25′ MINIMUM 30′ MAXIMUM
ADJUSTABLE IN ONE-FOOT INCREMENTS

Ref. No.	Description	Piece No.
S6	Assembly of Roadway Arm with wiring and reflectors, less gate lights	3565-333
S7	Same as Ref. S6, less wiring and lights	3565-363
S8	Wiring Harness Only (Includes all material for wiring roadway arm for three gate lights)	3565-343
	REPLACEMENT PARTS	
1	Base Board (Specify Track or Field side)	3562-53-12
2	Tongue	3565-52B
3	Side Board (Specify Track or Field side)	3565-54-12E
4	Spacer Block	3562-75
4A	Spacer Block	3562-74
5	Through Stud	3562-66B
5A	Through Stud	3562-66
6	Machine Bolt, 3/8″-16 x 3″ lg. hex. hd., stl.	
7	Washer, 7/16″ I.D. x 1½″ O.D., stl.	
8	Square Nut, 3/8″-16, stl.	
9	Machine Bolt, ½″-13 x 2″ lg. hex. hd., stl.	
10	Hex. Nut, ½″-13, stl.	
11	Spring Lock Washer, ½″, stl.	
12	Aluminum Washer Plate	3562-72A
12A	Aluminum Washer Plate	3562-71A
12B	Aluminum Washer Plate	3562-71
14	Machine Bolt, 5/16″-18 x 1¾″ lg., hex. hd., stl.	
15	Hex. Nut, 5/16″-18, stl.	
16	Washer, 5/16″, plain, stl.	
17	Junction Box Assembly (For Details see Pages 3-14 and 3-15)	3561-71D
18	3″ Diameter Plastic Reflector, with Mounting Screws	38B
19	Machine Bolt, 3/8″-16 x 2¼″ lg., hex. hd., stl.	
20	Tie-Rod Clip Assembly	3562-70A
21	Tie-Rod and Nut Assembly 41½″ lg., right hand thread	3562-63E
22	Tie-Rod and Nut Assembly 48″ lg., left hand thread	3562-63F
23	Turnbuckle	3562-67
24	Turnbuckle	3562-68
25	Cap Screw, ¼″-20 x 1¼″ lg., hex. hd., stl.	
26	Aluminum Cable Clip for one 3-Conductor Cable	
27	Nylon Cable Clip for one 3-Conductor Cable	1953-7A
28	2-Conductor Cable, In Bulk	90942
29	3-Conductor Cable, In Bulk	90943
30	Machine Bolt, 5/16″-18 x 1¾″ lg., hex. hd., with sq. nut	
31	Machine Bolt, 5/16″-18 x 2½″ lg., hex. hd., with sq. nut	
	PARTS NOT ILLUSTRATED	
32	Wood Screws, No. 8 x ¾″ rd. hd., Brass, for Cable Clips	
33	Terminal Block and Mounting Screws (For Details see Pages 3-14 and 3-15)	3561-196
34	½″ Cable Grip, for one 3-Conductor Cable	DB-990
35	Pipe Reducer, ¾″ to ½″, for Ref. 34	

Roadway Arms

31′ TO 38′ LONG, AS SPECIFIED

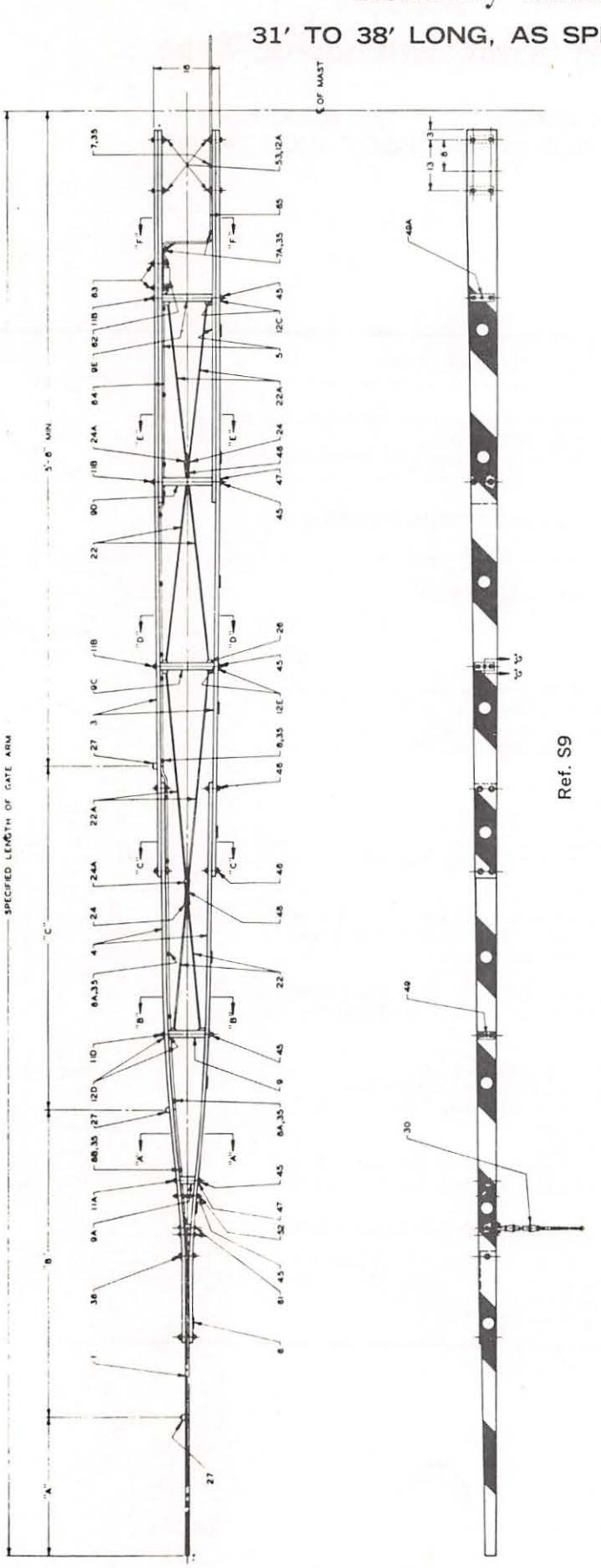

Ref. S9

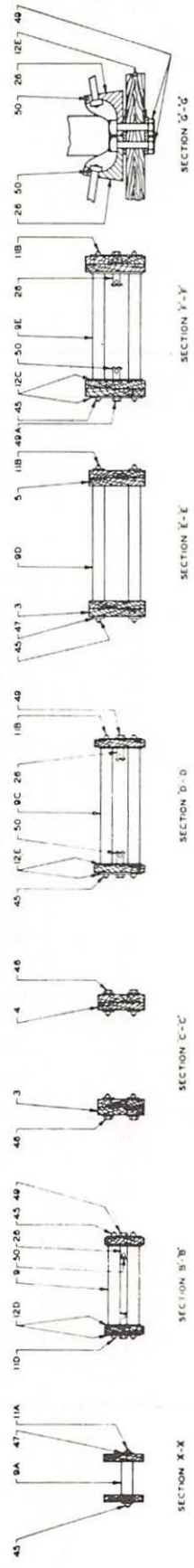

Roadway Arms

31′ TO 38′ LONG, AS SPECIFIED

Each arm in this range is constructed to the length specified.

Ref. No.	Description	Piece No.
S9	Assembly of Roadway Arm, complete with wiring and reflectors less gate lights. (Specify Length of Arm and Dimensions "A," "B" and "C")	3565-34ML
S10	Same as Ref. A, less wiring and reflectors (Specify Length of Arm)	3565-60
S11	Wiring Harness Only (Includes all material for wiring roadway arm for three gate lights.) (Specify Length of Arm and Dimensions "A," "B" and "C")	3565-215MB
	REPLACEMENT PARTS	
1	Tongue	See Table
3	Base Board (Specify Track or Field side)	See Table
4	Side Board (Specify Track or Field side)	See Table
5	Re-enforcing Board	3562-53-8
6	3" Dia. Plastic Reflector	38B
7	Nylon Cable Clip, for one 3-Conductor Cable	1953-7A
7A	Aluminum Cable Clip, for one 3-Conductor Cable	
8	Aluminum Cable Clip, for three 2-Conductor Cables	
8A	Same as Ref. 8, but for two 2-Conductor Cables	
8B	Same as Ref. 8, but for one 2-Conductor Cable	
9	Spacer Block, 10⅛" lg.	3562-75
9A	Spacer Block, 4" lg.	3562-76
9C	Spacer Block, 14⅛" lg.	3562-87
9D	Spacer Block, 13" lg.	3562-74XR
9E	Spacer Block, 12¾" lg.	3562-74R
11A	Through Stud, 6½" lg.	3562-66D
11B	Through Stud, 16⅞" lg.	3562-66
11D	Through Stud, 12¾" lg.	3562-66E
12A	Washer Plate	3562-71
12C	Washer Plate	3562-71A
12D	Washer Plate	3562-82
12E	Washer Plate	3562-72B
22	Tie-Rod and Nut Assembly, 41½" lg., right hand thread	3562-63E
22A	Tie-Rod and Nut Assembly, 48" lg., left hand thread	3562-63F
24	Turnbuckle	3562-67
24A	Turnbuckle	3562-68
26	Tie-Rod Clip	3562-70A
27	Assembly of Terminal Block (For Details see Pages 3-14 and 3-15)	3561-196
30	Buffer Leg (For Details see Page 3-29)	3562-316A
35	No. 8 x ¾" rd. hd. wood screw, brass	
38	Machine Bolt, ⅜"-16 x 3" lg., hex. hd., sq. nut and 2 plain washers	
45	Sq. Nut, ⅜"-16, stl.	
46	Machine Bolt, ⅜"-16 x 2¼" lg., hex. hd., stl., sq. nut and 2 plain washers	
47	Washer, 7/16" I.D. x 1½" O.D., plain, stl.	
48	Cap Screw, ¼"-20 x 1¼" lg., hex. hd., stl.	
49	Machine Bolt, hex. hd., 5/16"-18 x 1¾" lg., and sq. nut	
49A	Machine Bolt, hex. hd., 5/16"-18 x 2½" lg., and sq. nut	
50	Cotter Pin, ⅛" x 1½" lg., stl.	
52	Through Stud, 5⅛" lg.	3562-66AK
53	Machine Bolt, ⅙"-13 x 2¾" lg., hex. hd., stl., hex. nut and lock washer	
61	Rivet, rd. hd., stl., ⅜" x 3½", complete with cotter pin	3362-133A
62	Junction Box Assembly (For Details see Pages 3-14 and 3-15)	3561-71D
63	Machine Bolt, 5/16"-18 x 1¾" lg., hex. hd., hex. nut and 2 plain washers	
64	2-Conductor Cable, In Bulk	90942
65	3-Conductor Cable, In Bulk	90943
	PARTS NOT ILLUSTRATED	
70	½" Cable Grip, for 3-Conductor Cable	DB990
71	Pipe Reducer, ¾" to ½", for Ref. 70	

Table

Specified Length of Gate Arm	Reference 1 Tongue Piece No.	Reference 3 Base Board Piece No.	Reference 4 Side Board Piece No.
31	3562-52A	3562-16	3562-54-12A
32	3562-52B	3562-16	3562-54-12A
33	3562-52C	3562-16	3562-54-12A
34	3562-52D	3562-16	3562-54-12A
35	3562-52A	3562-16A	3562-54-16
36	3562-52B	3562-16A	3562-54-16
37	3562-52C	3562-16A	3562-54-16
38	3562-52D	3562-16A	3562-54-16

Roadway Arms

39' TO 44' LONG

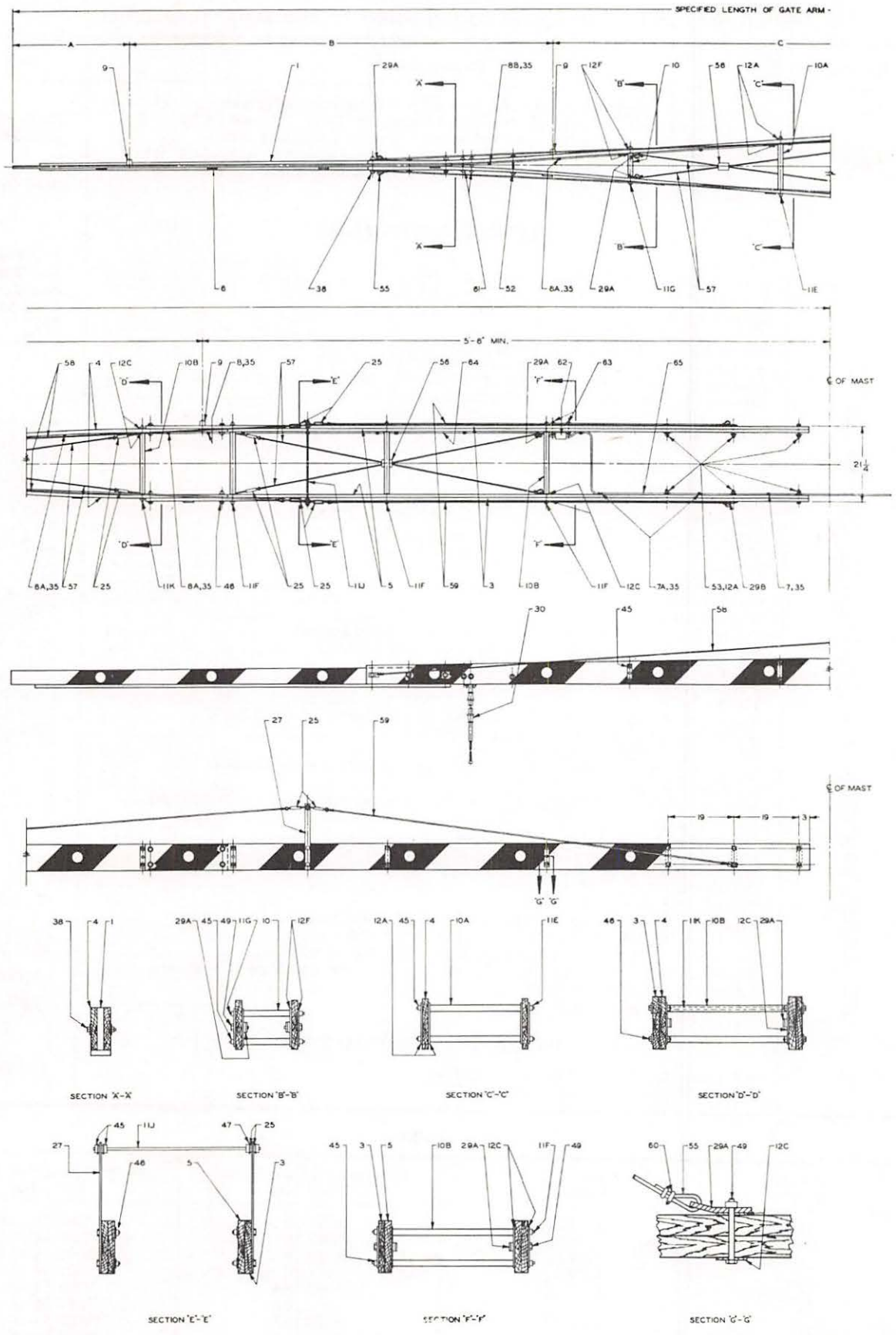

Roadway Arms

39′ TO 44′ LONG

Ref. No.	Description	Piece No.
S12	Assembly of Roadway Arm complete with wiring and reflectors, less gate lights. (Specify Length of Arm and Dimensions "A," "B" and "C")	3565-34ML
S13	Same as Ref. S12, less wiring and reflectors. (Specify Length of Arm)	3565-60
S14	Wiring Harness Only. (Includes all material for wiring roadway arm for three gate lights.) (Specify Length of Arm and Dimensions "A," "B" and "C")	3565-215MB
	REPLACEMENT PARTS	
1	Tongue, for 39′ arm	3562-52J
1A	Tongue, for 40′ arm	3562-52K
1B	Tongue, for 41′ arm	3562-52L
1C	Tongue, for 42′ arm	3562-52M
1D	Tongue, for 43′ arm	3562-52N
1E	Tongue, for 44′ arm	3562-52P
3	Base Board, (Specify Track or Field side)	3562-54-16F
4	Side Board, (Specify Track or Field side)	3562-54-16A
5	Reinforcing Board	3562-54-14E
6	3″ Diameter Plastic Reflector	38B
7	Nylon Cable Clip, for one 3-Conductor Cable	1953-7A
7A	Aluminum Cable Clip, for one 3-Conductor Cable	
8	Aluminum Cable Clip, for three 2-Conductor Cables	
8A	Same as Ref. 8, but for two 2-Conductor Cables	
8B	Same as Ref. 8, but for one 2-Conductor Cable	
9	Assembly of Terminal Block (For Details see Pages 3-14 and 3-15)	3561-196
10	Spacer Tubing, 7″ long	3562-99B
10A	Spacer Tubing, 13¼″ long	3562-99A
10B	Spacer Tubing, 17¾″ long	3562-99
11E	Through Stud, 16″ long	3562-66X
11F	Through Stud, 21¾″ long	3562-66Y
11G	Through Stud, 10⅛″ long	3562-66F
11J	Through Stud, 24″ long	3562-272B
11K	Through Stud, 20¼″ long	3562-66N
12A	Washer Plate	3562-71
12C	Washer Plate	3562-71A
12F	Washer Plate	3562-273
25	Turnbuckle	3562-184
27	Upright Support	3562-271
29A	Guy Wire Clip	3562-283
29B	Guy Wire Clip	3562-282A
30	Buffer Leg (For Details see Page 3-29)	3562-316A
35	No. 8 x ¾″ rd. hd. wood screws, brass	
38	Machine Bolt, ⅜″-16 x 3″ lg., hex. hd., stl., sq. nut and two plain washers	
45	Sq. Nut, ⅜″-16, stl	
46	Machine Bolt, ⅜″-16 x 2¼″ lg., hex. hd., stl., sq. nut and 2 plain washers	
47	Washer, 7/16″ I.D. x 1⅛″ O.D., Plain, stl	
49	Machine Bolt, hex. hd., ½″-13 x 1¾″ long and sq. nut	
52	Through Stud, 5⅛″ long	3562-66AK
53	Machine Bolt, hex. hd., ½″-13 x 2¾″ lg. hex. nut and lock washer	
55	Thimble	90591
56	Cable Separator	3562-282
57	Guy Wire Subassembly, 7′-6″ lg., (Includes Ref. 25, 55 and 60)	3562-284B
58	Guy Wire Subassembly, 18′-0″ lg., (Includes Ref. 25, 55 and 60)	3562-284A
59	Guy Wire Subassembly, 10′-0″ lg., (Includes Ref. 25, 55 and 60)	3562-284
60	Crosby Clip	90592
61	Rivet, rd. hd., stl., ⅜″ x 3½″, complete with cotter pin	3562-133A
62	Junction Box Assembly. (For Details see Pages 3-14 and 3-15)	3561-71D
63	Machine Bolt, 5/16″-18 x 1¾″ lg., hex. hd., hex. nut and 2 plain washers	
64	2-Conductor Cable, In Bulk	
65	3-Conductor Cable, In Bulk	
	PARTS NOT ILLUSTRATED	
70	½″ Cable Grip, for 3-Conductor Cable	DB990
71	Pipe Reducer, ¾″ to ½″	

Sidewalk Arms 6' to 18' Long
Type 3565-34SW Type 3565-60SW
For Model 10 Signals

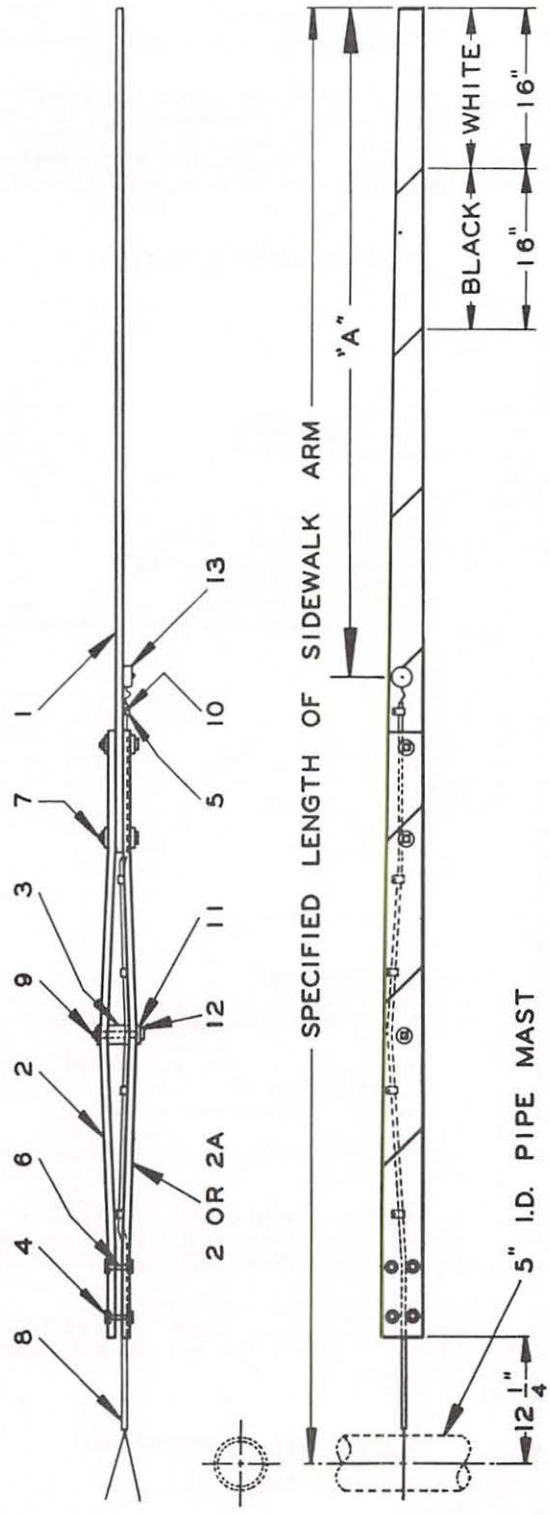

Ref. U

Sidewalk Arms 6' to 18' Long
Type 3565-34SW Type 3565-60SW
For Model 10 Signals

Ref. No.	Description	Piece No.
U	Assembly of Sidewalk Arm Complete with Wiring (Less Light) (Specify Length of Sidewalk Arm and Dimension "A")	3565-34SW
U1	Assembly of Sidewalk Arm Complete (Less Wiring and Light) (Specify Length of Sidewalk Arm)	3565-60SW
	REPLACEMENT PARTS	
1	Tongue	See Table
2	Base Board	See Table
2A	Base Board (For 3565-34SW only)	See Table
3	Spacer Block	3565-150
4	5/16" Plain Washer	
5	Clip	3562-95
6	Cap Screw, 5/16"-24 S.A.E. x 1½" Lg. hex. hd. stl.	
7	Mach. Bolt, ⅜"-16 x 3¼" Lg. sq. hd. stl., hex. Nut and two Plain Washers	
8	No. 18-2 Conductor Neoprene Covered Type "S" Cord. (Specify Length)	
9	Through Stud	3562-66DD
10	Wood Screw No. 10 x ¾" Lg. rd. hd. brass	
11	Washer ⅜" Plain, Stl.	
12	Hex. Nut ⅜"-16 Stl.	
13	Assembly of Terminal Block (For Details see Pages 3-14 and 3-15)	3561-196

Table

Specified Length of Gate Arm	Ref. No. 1	Ref. No. 2	Ref. No. 2A	Suggested Values For Dimension "A"
6'-0"	3565-142-1	3565-141	3565-141A	2'-2"
6'-6"	3565-142-1A	3565-141	3565-141A	2'-5"
7'-0"	3565-142-2	3565-141	3565-141A	2'-8"
7'-6"	3565-142-2A	3565-141	3565-141A	2'-11"
8'-0"	3565-142-3	3565-141	3565-141A	3'-2"
8'-6"	3565-142-3A	3565-141	3565-141A	3'-5"
9'-0"	3565-142-4	3565-141	3565-141A	3'-8"
9'-6"	3565-142-4A	3565-141	3565-141A	3'-11"
10'-0"	3565-142-5	3565-141	3565-141A	4'-2"
10'-6"	3565-142-5A	3565-141	3565-141A	4'-5"
11'-0"	3565-142-6	3565-141	3565-141A	4'-8"
11'-6"	3565-142-6A	3565-141	3565-141A	4'-11"
12'-0"	3565-142-7	3565-141	3565-141A	5'-2"
12'-6"	3565-142-4A	3565-155	3565-155A	5'-5"
13'-0"	3565-142-5	3565-155	3565-155A	5'-8"
13'-6"	3565-142-5A	3565-155	3565-155A	5'-11"
14'-0"	3565-142-6	3565-155	3565-155A	6'-2"
14'-6"	3565-142-6A	3565-155	3565-155A	6'-5"
15'-0"	3565-142-7	3565-155	3565-155A	6'-8"
15'-6"	3565-142-4A	3565-156	3565-156A	6'-11"
16'-0"	3565-142-5	3565-156	3565-156A	7'-2"
16'-6"	3565-142-5A	3565-156	3565-156A	7'-5"
17'-0"	3565-142-6	3565-156	3565-156A	7'-8"
17'-6"	3565-142-6A	3565-156	3565-156A	7'-11"
18'-0"	3565-142-7	3565-156	3565-156A	8'-2"

Sidewalk Arms 6' to 18' Long
Type 3565-34SWX Type 3565-60SWX

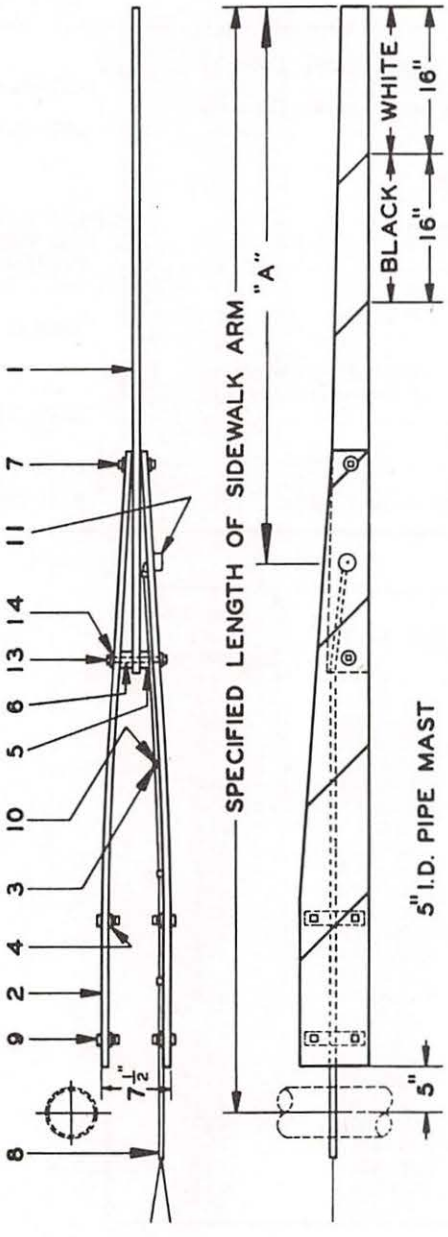

Arm lengths 6' to 10'-6"
Ref. U2

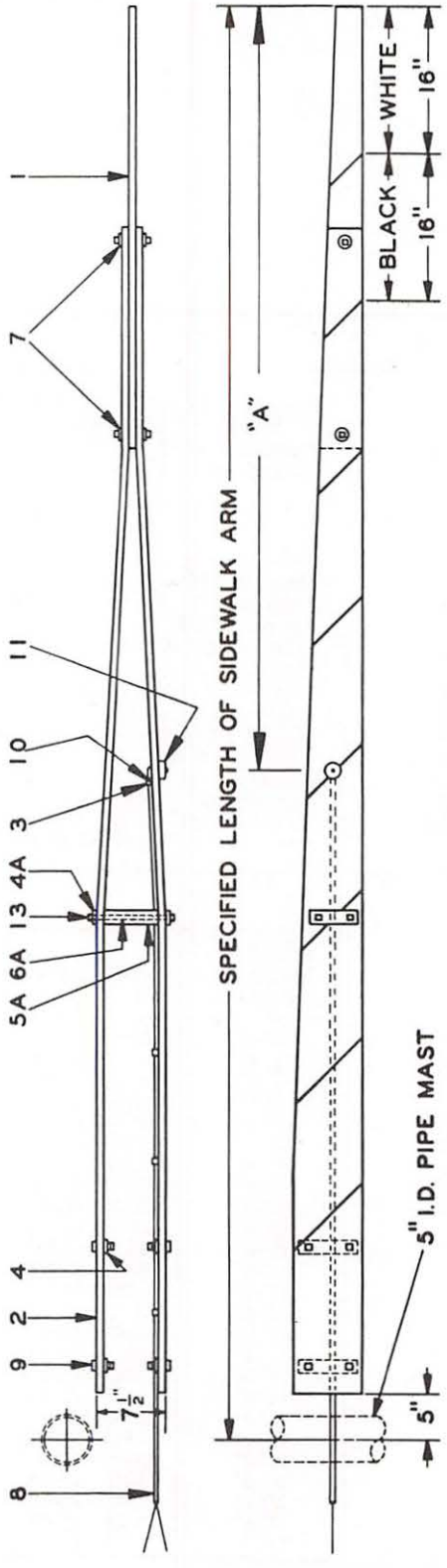

Arm lengths 11' to 18'
Ref. U3

Sidewalk Arms 6' to 18' Long
Type 3565-34SWX Type 3565-60SWX

Ref. No.	Description	Piece No.
U2	Assembly of Sidewalk Arm Complete with Wiring (Less Light) (Specify Length of Sidewalk Arm and Dimension "A")	3565-34SWX
U3	Assembly of Sidewalk Arm Complete (Less Wiring and Light) (Specify Length of Sidewalk Arm)	3565-60SWX
	REPLACEMENT PARTS	
1	Tongue	See Table
2	Base Board	See Table
3	Clip	3562-95
4	Washer Plate	3562-71
4A	Washer Plate	3562-72
5	Spacer Block	3562-98
5A	Spacer Block	3562-59
6	Through Stud	3562-66D
6A	Through Stud	3562-66H
7	Mach. Bolt, ⅜"16 x 3" Lg. sq. hd. stl., hex. Nut and two Plain Washers	
8	No. 18-2 Conductor Neoprene Covered Type "S" Cord (Specify Length)	
9	Mach. Bolt, ½"-13 x 2" Lg. hex. hd. stl., hex. Nut and Lock Washer	
10	Wood Screw No. 10 x ¾" Lg. brass	
11	Assembly of Terminal Block Complete (For Details see Pages 3-14 and 3-15)	3561-196

Table

Specified Length of Gate Arm	Ref. No. 1	Ref. No. 2	Suggested Values For Dimension "A"
6'-0"	3562-57-2	3562-56-6	2'-2"
6'-6"	3562-57-2A	3562-56-6	2'-5"
7'-0"	3562-57-3	3562-56-6	2'-8"
7'-6"	3562-57-3A	3562-56-6	2'-11"
8'-0"	3562-57-4	3562-56-6	3'-2"
8'-6"	3562-57-4A	3562-56-6	3'-5"
9'-0"	3562-57-5	3562-56-6	3'-8"
9'-6"	3562-57-5A	3562-56-6	3'-11"
10'-0"	3562-57-6	3562-56-6	4'-2"
10'-6"	3562-57-6A	3562-56-6	4'-5"
11'-0"	3562-57-2	3562-58	4'-8"
11'-6"	3562-57-2A	3562-58	4'-11"
12'-0"	3562-57-3	3562-58	5'-2"
12'-6"	3562-57-3A	3562-58	5'-5"
13'-0"	3562-57-4	3562-58	5'-8"
13'-6"	3562-57-4A	3562-58	5'-11"
14'-0"	3562-57-5	3562-58	6'-2"
14'-6"	3562-57-5A	3562-58	6'-5"
15'-0"	3562-57-6	3562-58	6'-8"
15'-6"	3562-57-6A	3562-58	6'-11"
16'-0"	3562-57-7	3562-58	7'-2"
16'-6"	3562-57-7A	3562-58	7'-5"
17'-0"	3562-57-8	3562-58	7'-8"
17'-6"	3562-57-8A	3562-58	7'-11"
18'-0"	3562-57-9	3562-58	8'-2"

Hinged-Tongue Roadway Gate Arms

ENGINEERED AND CUSTOM BUILT TO MEET SPECIFIC REQUIREMENTS

Where overhead wires or structures would obstruct the gate arm in the raised, or clear, position it is often necessary to provide a special gate arm with a hinged tongue. Illustrated is a typical arm of this type.

Arms of 14′ to 44′, extended length, can usually be made to meet requirements if the clearance height does not necessitate a hinged tongue exceeding one-third of the total arm length.

Given the specific requirements we will submit a drawing for consideration depicting a recommended design. To enable us to perfect a suitable design the dimensions "C" and "D" must, of course, be known. If the obstruction is not directly above the mast, but is out over the roadway, then the distance from the mast as well as the height of the obstruction above the top of the signal foundation must also be known.

No general replacement parts list for hinged-tongue gate arms can be compiled for cataloging. However, drawings are furnished with each arm supplied, from which replacement parts can be ordered, if required.

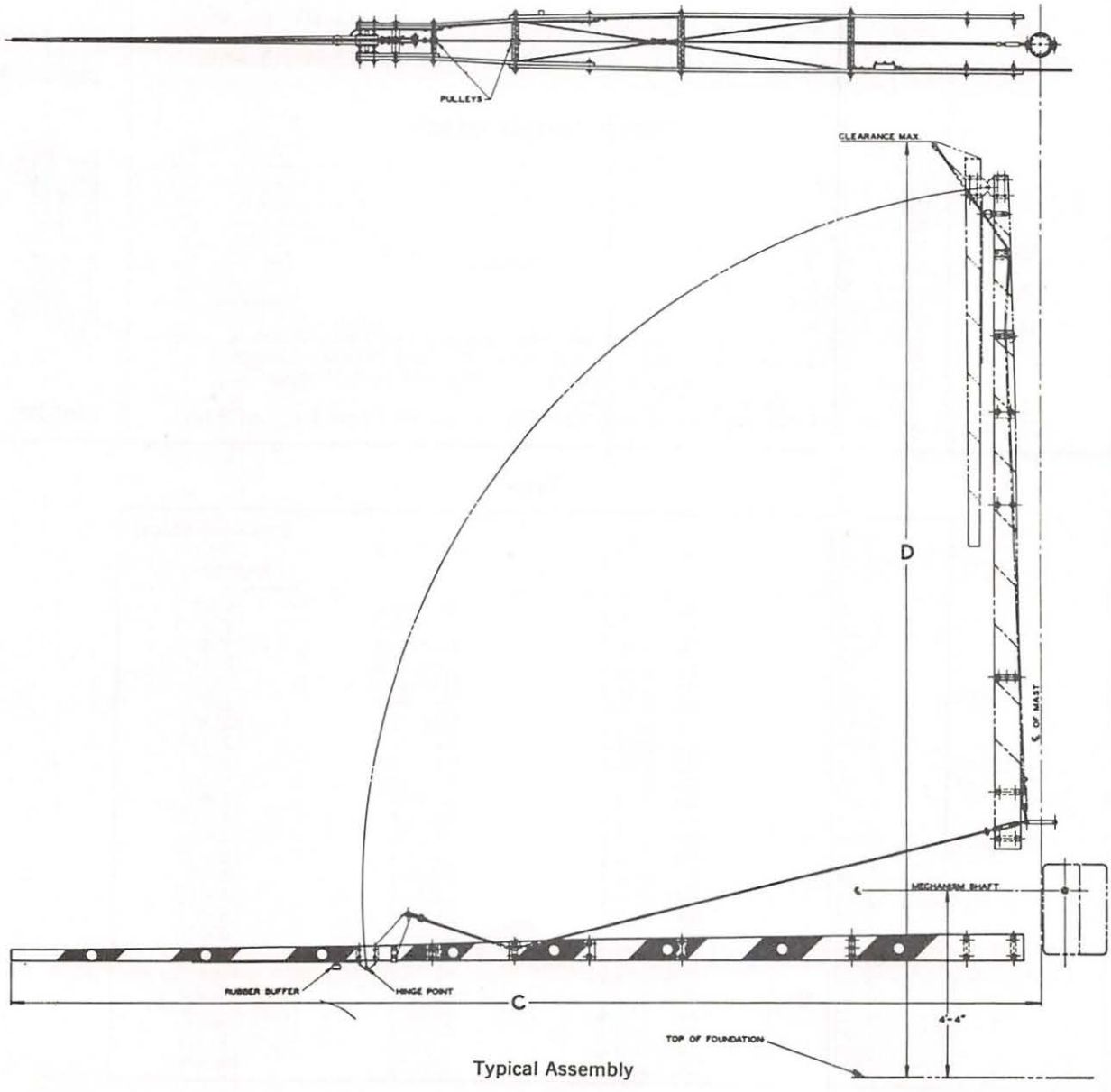

Typical Assembly

Buffer Leg
For Use With Roadway Arms 31' to 44' Long

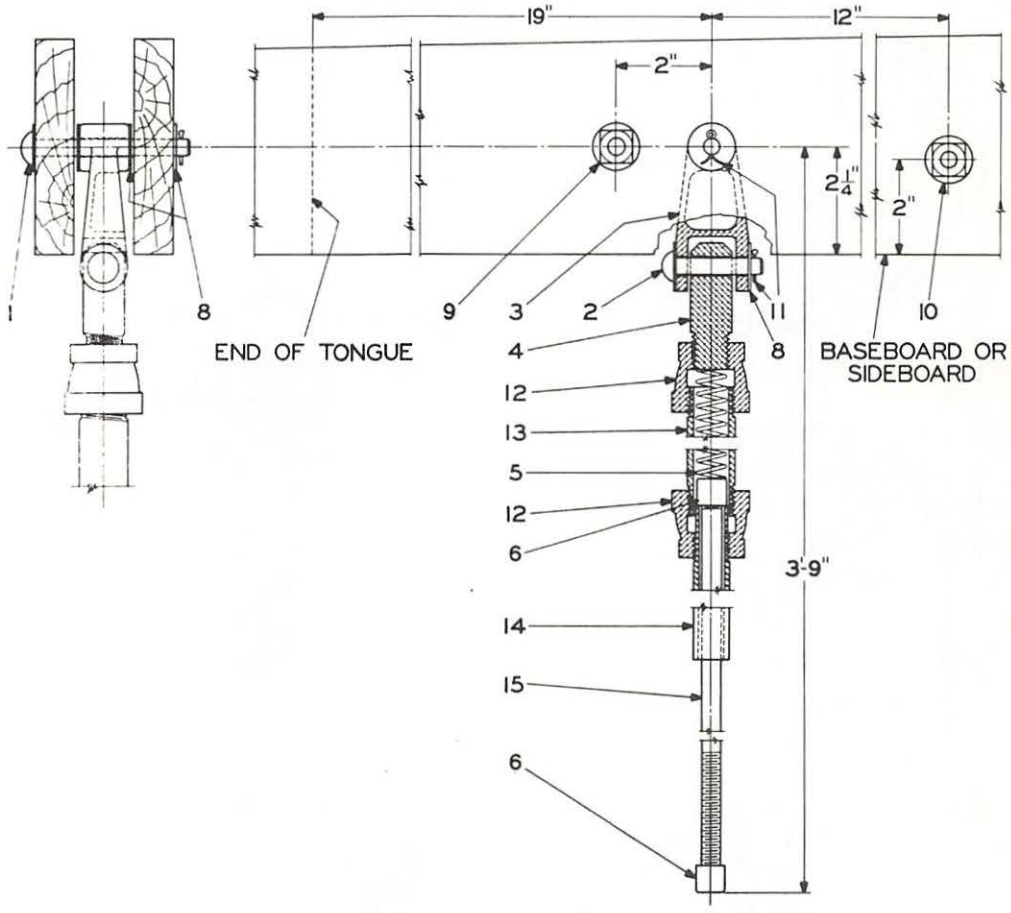

Ref. No.	Description	Piece No.
X	Buffer Leg Assembly Complete	3562-316A
X1	Same as Ref. X, Less Ref. No. 9 & 10	3562-316
	REPLACEMENT PARTS	
1	Rivet, ⅜" x 3¼" Lg. stl.	3562-133A
2	Rivet, ⅜" x 1⅞" Lg. stl.	3562-133
3	Yoke	3562-117B
4	Plug	3562-317
5	Compression Spring	3562-318
6	Pipe Cap., stl.	3562-319
8	Plain Washer, ⅜" I.D. x 1" O.D., stl.	
9	Mach. Bolt, ⅜"-16 x 3½ "Lg., sq. hd., sq. nut and plain Washer, stl.	
10	Through Stud, 5⅛" Lg., Aluminum	3562-66AK
11	Cotter Pin, 1/16" x ¾" Lg., stl.	
12	Reducer, ¾" x ½", Aluminum	
13	Pipe Nipple, ¾" x 12" Lg. T.B.E. Aluminum	
14	Pipe, ½" x 4½" Lg. T.O.E. Aluminum	3562-326
15	Pipe, ¼" x 2'-5" Lg. Aluminum	3562-320

Gate Light—Type 1573-50
Two-Way Indication—5⅜" Diameter Lenses

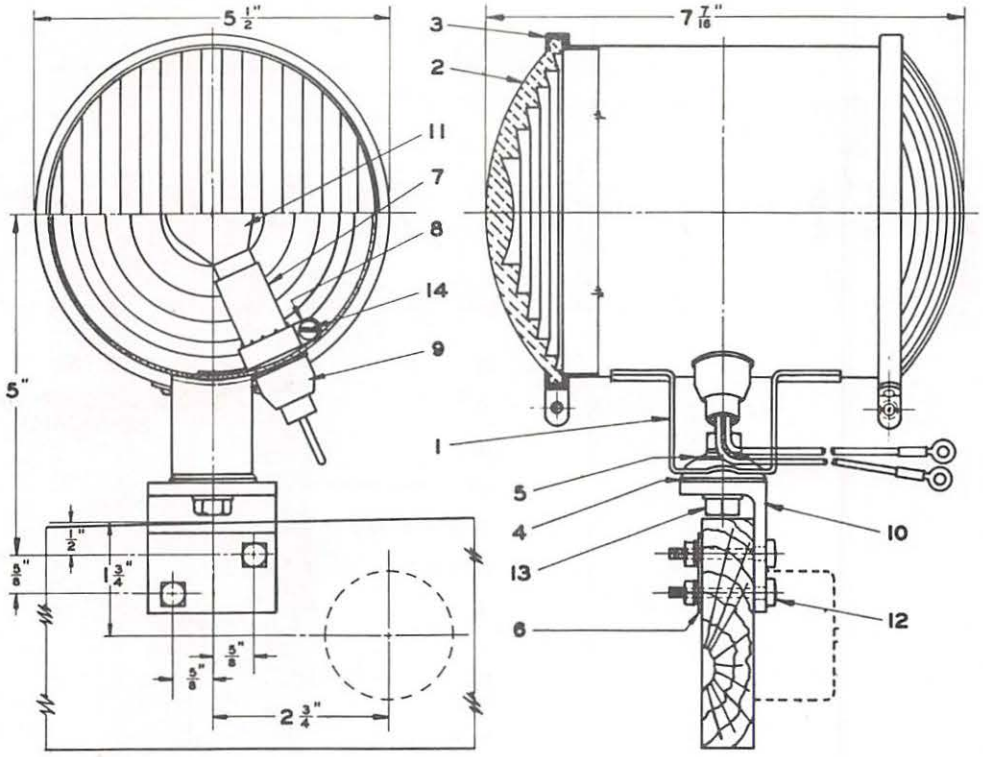

Ref. A

Type 1573-50 Gate Light is available with 30° Spreadlite or Optical Type Lenses. Horizontal and Vertical Alignment is adjustable. Aluminum construction limits weight at 2¼ lbs. S.C.B.B. lamp receptacle provided; lamp bulb not furnished unless specified.

Ref. No.	Description	Piece No.
T	Type 1573-50 Gate Light Complete, with 30° Spreadlite Lens (Red), Without Electric Lamp unless specified	1573-50
	REPLACEMENT PARTS	
1	Gate Light Body Assembly	1573-6
2	30° Spreadlite Lens, 5⅜" Diameter, Red	5330
3	Lens Ring	0500-106S-B
4	Adjusting Washer	1563-15
5	Washer, Steel	1563-16
6	Washer Plate	1563-5
7	Lamp Receptacle Assembly	6001-5
8	Clamp	1573-3
9	Insulator Bushing	1563-8
10	Mounting Bracket	1563-2A
11	Lamp, Incandescent, S.C.B.B., S-11 Bulb (Specify Voltage and Wattage)	
12	Mach. Bolt, ¼"-20 x 1½" Lg. sq. hd. steel and sq. nut	
13	Cap Screw, 5/16"-18 x 1¼" Lg. hex. hd. steel	
14	Mach. Screw, No. 8-32 x ⅝" Lg. rd. hd. brass and hex. nut	

Gate Light - Type 1590
Fresnel Lens

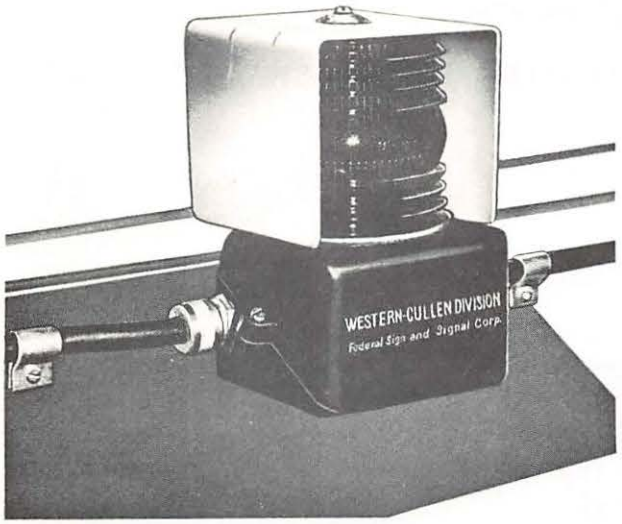

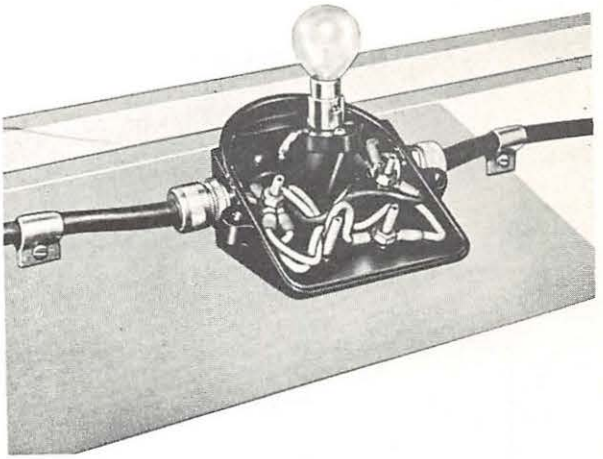

Type 1590 Gate Light is equipped with a 3⅝" diameter, 360°, Red Fresnel Lens, shielded to provide indication to cross traffic only. The shield is adjustable to any position required to shut off the light beam along the railroad. It can be removed and discarded if desired.

Each light unit weighs but 1¼ pounds with shield.

The light is attached to the gate arm by two screws or machine bolts through holes accessible with the cover removed.

Four A.A.R. standard No. 14 binding posts are provided in the base housing to accommodate either a 3-wire or 4-wire light circuit.

Lamp socket accommodates S.C.B.B. lamps having 1¼" light center length and S-8 or S-11 bulb.

The base housing and cover are of molded, high-impact, "Cycolac"; the Fresnel Lens is of "Lexan," making the unit practically indestructible.

The Tip Light, No. 1590A, is equipped with one cable grip for 2-conductor cable 0.312" to 0.375" in diameter and one plastic pipe plug.

The Center Light, No. 1590B, is equipped with one cable grip for 2-conductor cable and one cable grip for 3- or 4-conductor cable 0.375" to 0.437" in diameter.

The Butt Light, No. 1590C, is equipped with two cable grips for 3- or 4-conductor cable.

Three lights units, one each No. 1590-A, -B and -C, together with 6 No. 10 round head wood screws, ⅞" long and 6 No. 10-32 x 1⅜" round head machine bolts, nuts and washers are packed in one carton as a set for one arm.

Ref. No.	Description	Piece No.
T10	Set of three Gate Lights, Type 1590 complete.....	1590-50

For Replacement Parts Listing see back of this sheet, page 3-30B.

Gate Light - Type 1590
Fresnel Lens

REPLACEMENT PARTS

(For full description of Gate Light see front of this sheet, page 3-30A)

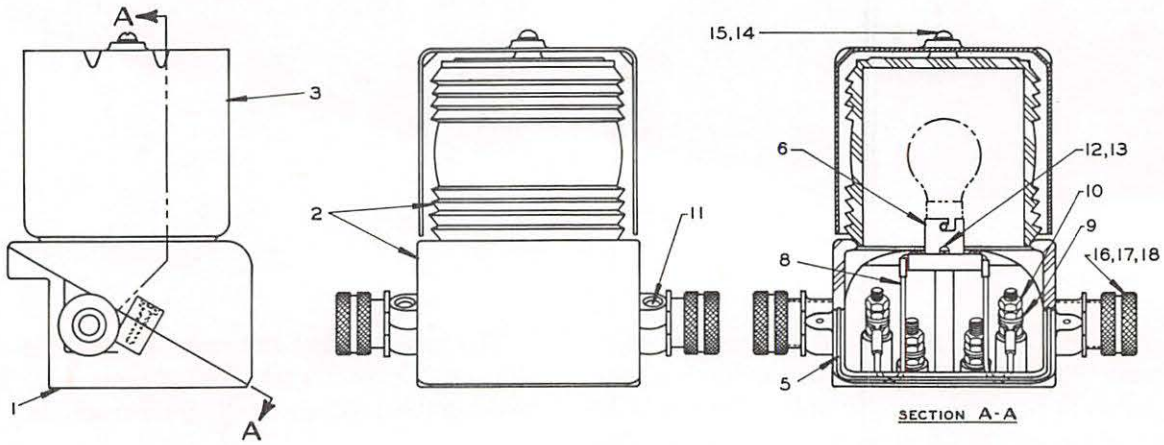

Ref. No.	Description	Piece No.
T11	Type 1590 Tip Light Complete with Mounting Screws	1590A
T12	Type 1590 Center Light Complete with Mounting Screws	1590B
T13	Type 1590 Butt Light Complete with Mounting Screws	1590C
1	Molded Base with Binding Post Studs and Gasket only	1590-1C
2	Molded Cover and Lens Assembly	1590-7
3	Aluminum Shield	1590-4
5	Gasket Only	1590-6A
6	Lamp Socket	90809
8	Wire Leads with Terminals	1590-8
9	Washer, No. 14, Brass, N.P.	
10	Nut, Hex., No. 14-24, Brass, N.P.	
11	Screw, No. 10-24 x ½" lg., Fil. Hd., Brass, N.P.	
12	Screw, No. 5-40 x ½" lg., Fil. Hd., Brass, N.P.	
13	Lockwasher, No. 5, Stl. Cad. Pl.	
14	Screw, No. 10-24 x ¼" lg., Rd. Hd., Brass, N.P.	
15	Washer, External Star, No. 10, Cad. Pl.	
16	Cable Grip, for 2 conductor cable	DB-4
17	Cable Grip, for 3- or 4-conductor cable	DB-438
18	Pipe Plug, Plastic	1590-9

Gate Light—Type 1585
Fresnel Lens

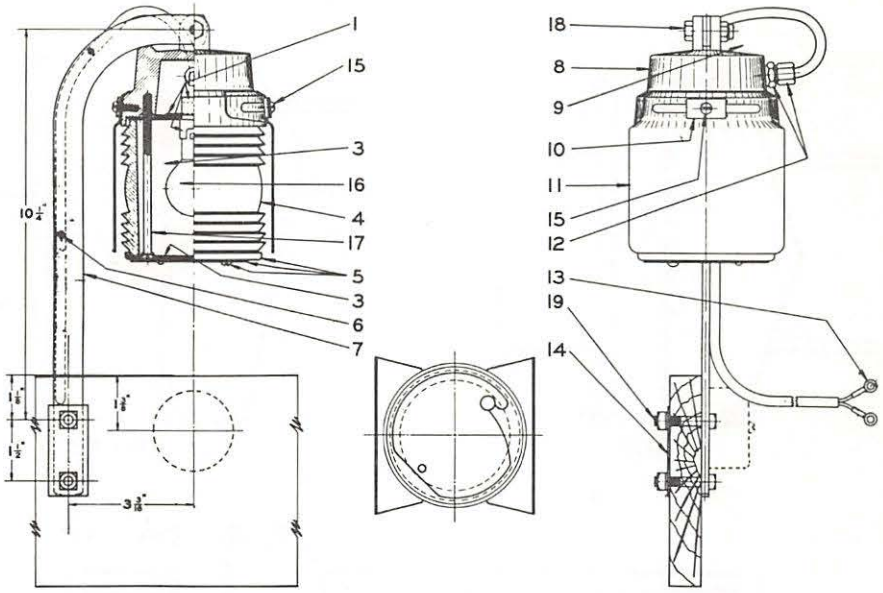

Type 1585 Gate Light is equipped with a 3⅝" diameter, red, 360° Fresnel Lens, shielded to provide indication to cross traffic only. A constant vertical axis is provided by the suspension mounting bracket. Wt. 2 lbs.; S.C.B.B. lamp receptacle; lamp bulb not furnished unless specified.

Ref. No.	Description	Piece No.
T2	Type 1585 Gate Light Complete with Mounting Bracket and Shields	1585
T3	Same as Ref. T2, Less Shields	1585-40
T4	Subassembly of Gate Light, with Shields, Less Mounting Bracket	1585-18AX
T5	Same as Ref. T4, Less Mounting Bracket and Shields	1585-40AX
T6	Subassembly of Mounting Bracket (Includes Items 6, 7, 14 and 19)	1585-15A
	REPLACEMENT PARTS	
1	Lamp Receptacle, Cord, Bracket Assembly	1585-12B
3	Gasket	1575-10
4	Fresnel Lens, 360°, Red, Plastic	1575-11P
5	Cover and Retaining Ring Subassembly	1585-11
6	Wire Retainer	1573-9
7	Mounting Bracket	1585-9
8	Housing	1585-3
9	¼"-20 Dualock Nut	90163
10	Shield Clamp	1585-7
11	Shield	1585-2
12	Compression Connector	1580-7
13	Terminal	31887
14	Washer Plate	1575-16
15	Mach. Screw, No. 10-24 x ½" Lg. rd. hd. brass	
16	Lamp, Incandescent, S.C.B.B., Type S-11 Bulb (Not furnished unless Specified)	
17	Stove Bolt, 3/16" (10-24) x 4" Lg. fl. hd. stl	
18	Pivot Screw	1585-14
19	Mach. Bolt, ¼"-20 x 1½" Lg. sq. hd., sq. nut and Internal Lockwasher	

Gate Arm Support
For Model 10 Signals
Types 3565-105, 3565-105X, 3565-205

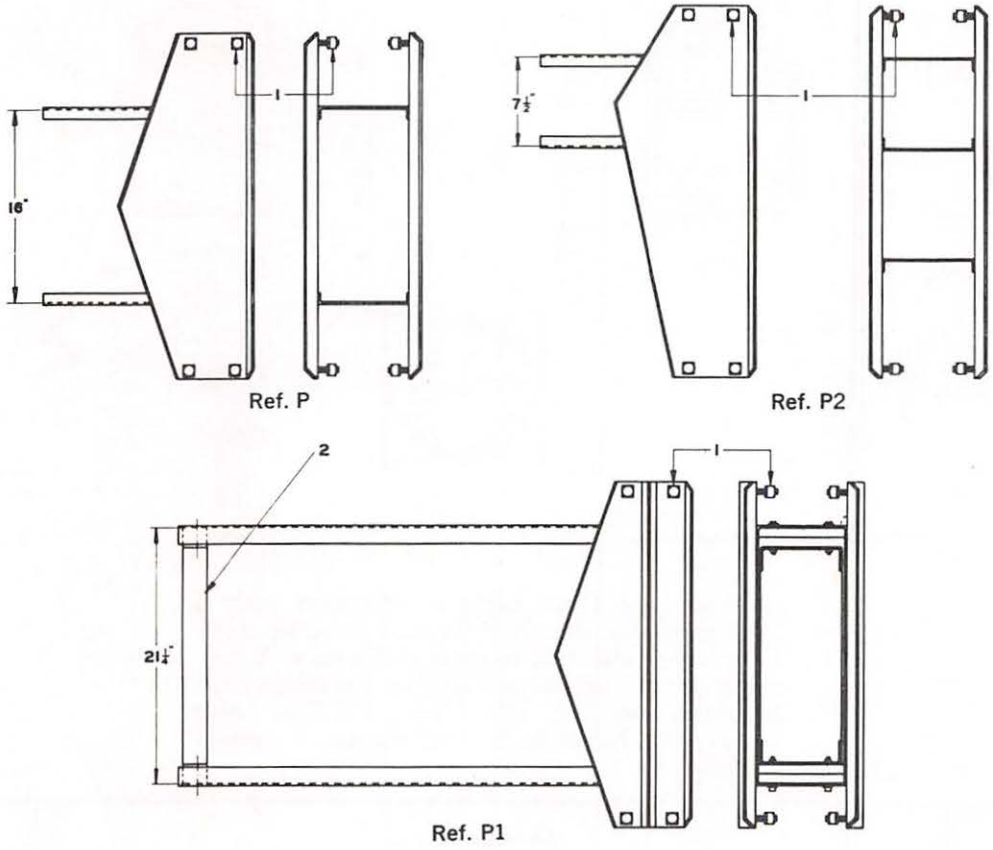

Ref. No.	Description	Piece No.
P	Gate Arm Support for use with Roadway Arms 14′ to 38′ Long Inclusive. (Includes Item 1)	3565-105
P1	Same as Ref. P, but for use with Roadway Arms 39′ to 44′ Long Inclusive. (Includes Items 1, 2, and shipping blocks)	3565-105X
P2	Same as Ref. P, but for use with Sidewalk Arms 18′ Long or Less. (Includes Item 1)	3565-205
	REPLACEMENT PARTS	
1	Mach. Bolt, ½"-13 x 1¾" Lg. hex. hd., sq. nut and Lockwasher	
2	Inner Brace	3565-113

Mechanism Support
For Model 10 Signals
Type 3565-380A

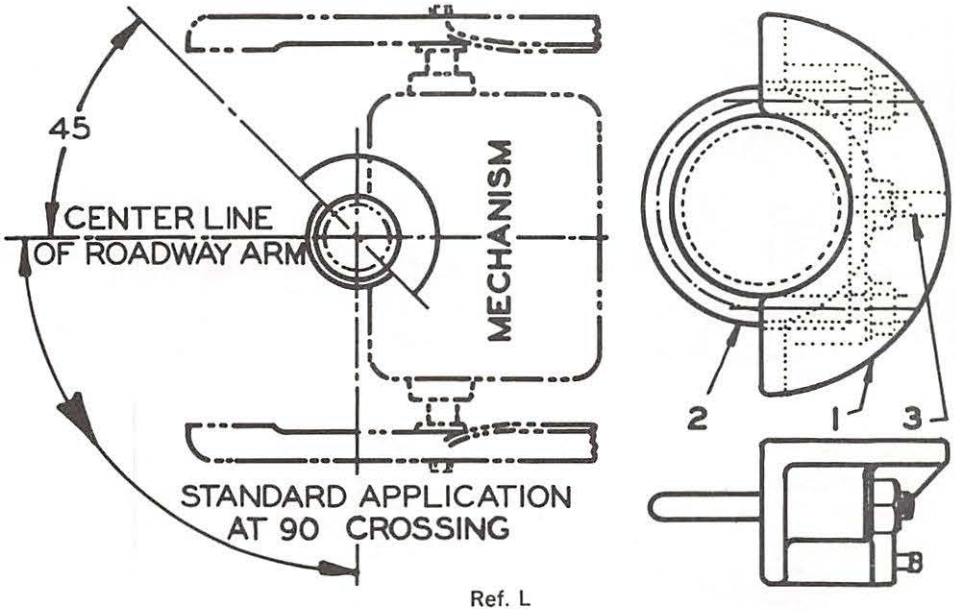

Ref. L

Because, on occasion, only one man is available to service a gate mechanism or damaged gate arm, we offer our No. 3565-380A Mechanism Support illustrated above. One such support complete is furnished with each mechanism.

The device may be secured permanently to the mast, or carried as part of a maintainer's servicing equipment.

Procedure is as follows—

Attach support to mast and against the under side of the mechanism.

Loosen mechanism clamp bolts.

Remove ⅜" cap screws holding the conduit flange to the junction box base.

When traffic permits, open "Motor Up" and "Slot" circuits in Mechanism.

Swing mechanism and gate assembly away from tracks until arm is parallel to curb or highway edge.

After repair is completed, reverse procedure, being careful not to restore "Slot" and "Motor Up" wires until mechanism is restored to its normal position.

Ref. No.	Description	Piece No.
L	Mechanism Support Complete for 5" I.D. Pipe Mounting	3565-380A
	REPLACEMENT PARTS	
1	Mechanism Support only	3565-380
2	"U" Bolt for 5" I.D. Pipe Mounting	0700-276
3	Set Screw, ½"-13 x 1¾" Lg. sq. hd. Cup Pt. Stl	

Gate and Counterweight Arm For Model 10 Signals

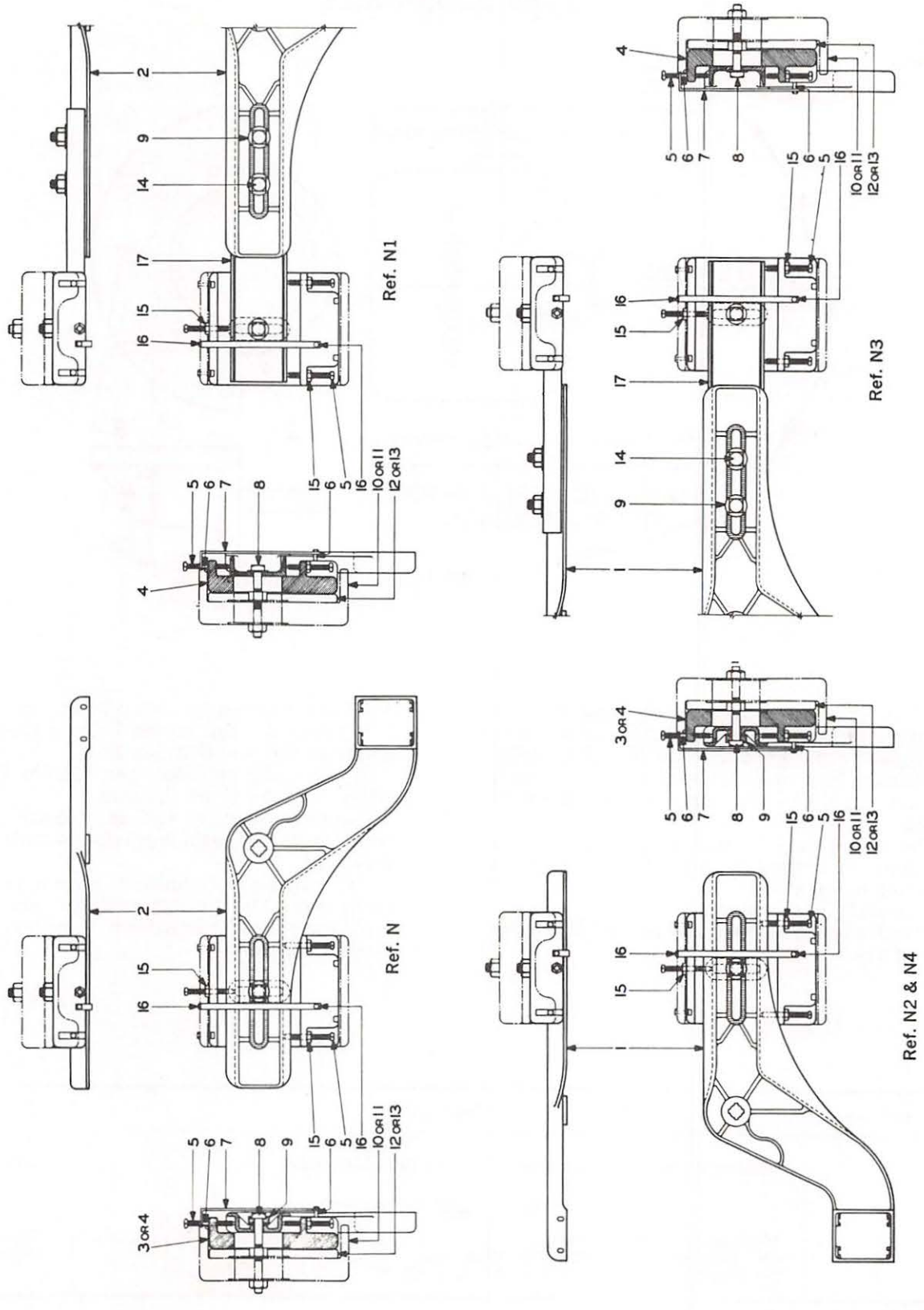

Gate and Counterweight Arm For Model 10 Signals

Ref. No.	Description	Piece No.
N	Gate and Counterweight Arm Complete for roadway arms 25′ to 30′ Lg., Inclusive for left side of mechanism. Specify length of arm	3565-102L
N1	Same as Ref. N, but for 31′ to 44′ Lg. Gate Arm	3565-102L
N2	Same as Ref. N, but for Right side and for 14′ to 30′ Lg. Gate arms inclusive	3565-103R
N3	Same as Ref. N2, but for 31′ to 44′ Lg. Gate Arm	3565-103R
N4	Gate and Counterweight arm, complete for sidewalk arms 18′ Lg. or less	3565-103RX
	REPLACEMENT PARTS	
1	Right Hand Counterweight Arm only	3565-103
2	Left Hand Counterweight Arm only	3565-102
3	Adjustable Counterweight Complete—85 lbs.	3562-236A
4	Adjustable Counterweight Complete—160 lbs.	3562-226A
4A	Counterweight only—160 lbs.	3562-226
5	Set Screw, 5/8″-11 x 6″ Lg., sq. hd. Dog Point Stl.	3562-211
6	Sleeve	3562-232
7	Retaining Strap	3562-233
8	Counterweight Mounting Bolt 6″ Lg. with hex. nut and plain washer	3562-182-6
8A	Same as Ref. 8, but 7″ Lg.	3562-182-7
8B	Same as Ref. 8, but 8″ Lg.	3562-182-8
8C	Same as Ref. 8, but 9″ Lg.	3562-182-9
8D	Same as Ref. 8, but 10″ Lg.	3565-182-10
9	Clamp Washer	3565-104
10	Counterweight—100 lbs.	3562-229
11	Counterweight—200 lbs.	3562-230
12	Counterweight—25 lbs.	3562-228
13	Counterweight—50 lbs.	3562-227
14	Mach. Bolt, 1″-8 x 3½″ Lg. sq. hd. stl. and 2 plain washers	
15	Hex. Nut 5/8″-11, steel	
16	Cap Screw, 3/8″-16 x 1¾″ Lg., hex. hd. stl.	
17	Counterweight Extension Arm (For Ref. N1 and N3 only)	3565-174

Gate Support Arm and Sidewalk Arm Bracket For Model 10 Signals

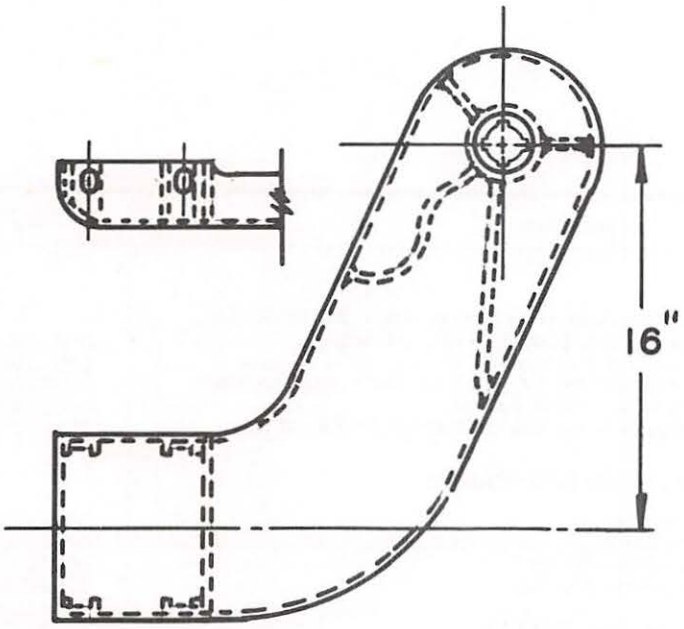

Ref. N5

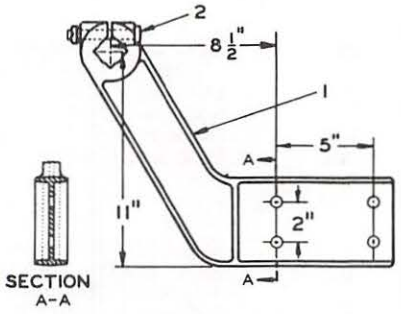

Ref. V

Ref. No.	Description	Piece No.
N5	Gate Support Arm Complete, for use with Roadway Arm 14′ to 24′ Long Inclusive	3565-101
V	Sidewalk Arm Bracket Complete, for use with Sidewalk Arm 18′ Long or Less	3565-111
	REPLACEMENT PARTS	
1	Sidewalk Arm Bracket (Casting only)	3565-111A
2	Mach. Bolt, ½"-13 x 3½" Lg. sq. hd. stl., hex. nut and Lock Washer	

Junction Box Cross Arm For Two-Way Indication Type 960-3 and 5

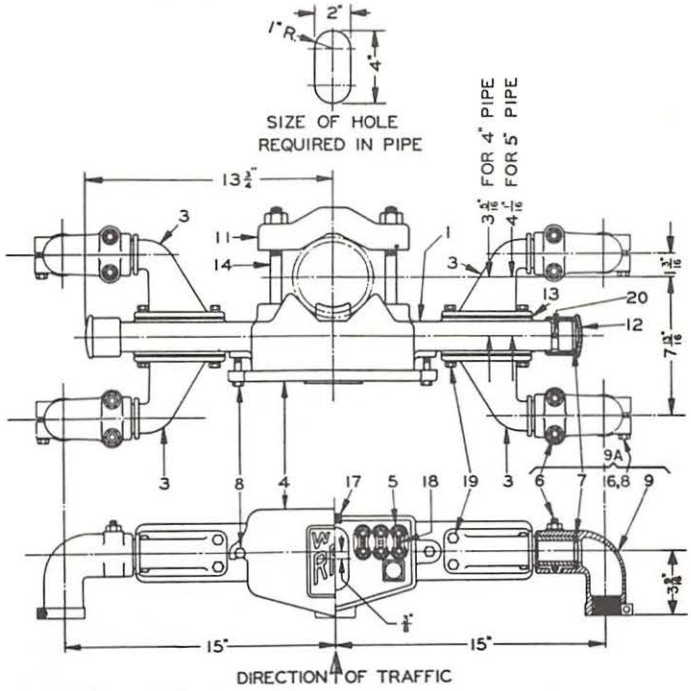

Ref. E

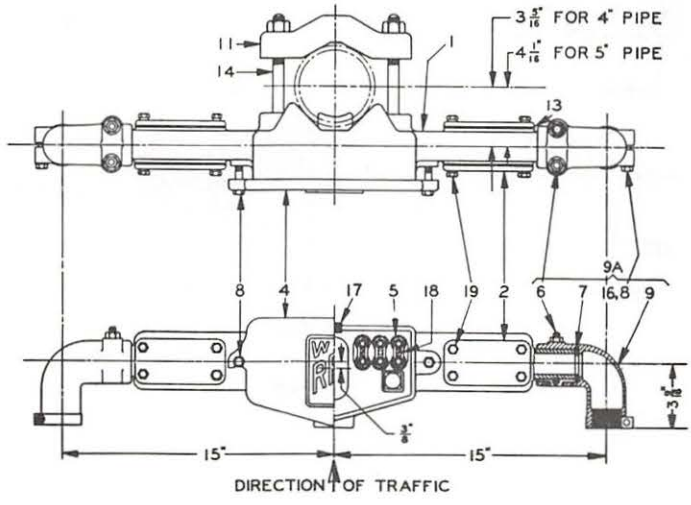

Ref. E1

Ref. No.	Description	Piece No.
E	Junction Box Cross Arm Assembly for Mounting Four 970-201 Light Units. (Specify Pipe Size)	960-5
E1	Same as Ref. E but for Two Light Units	960-3

For Replacement Parts Listing see Pages 3-44 and 3-45.

Type 960-83 Junction Box Cross Arm For One-Way Indication

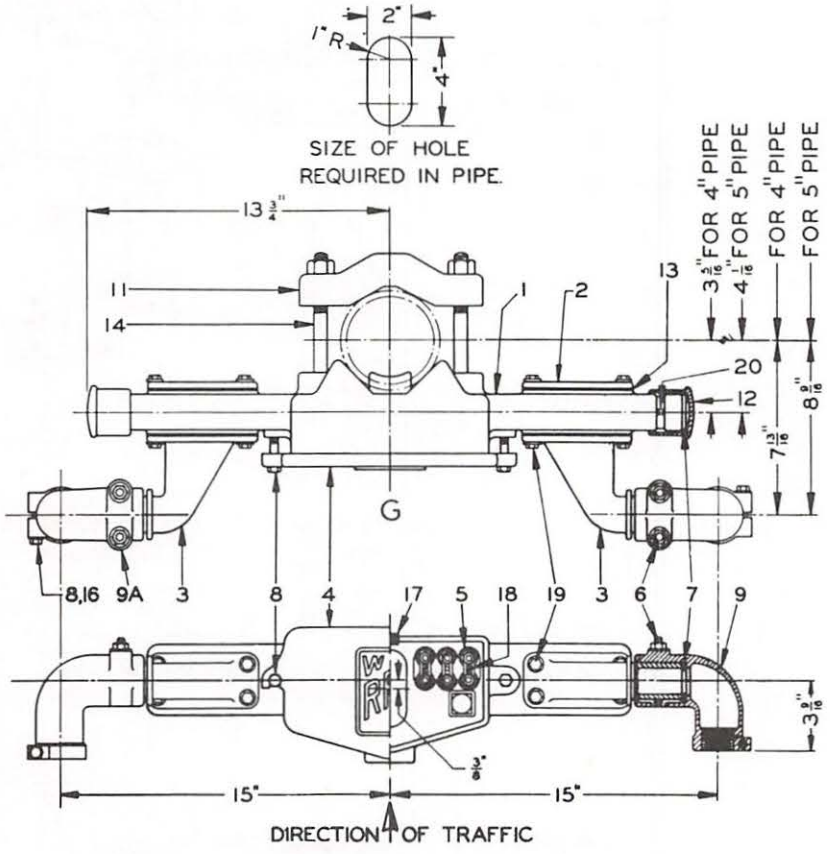

Ref. E2

Ref. No.	Description	Piece No.
E2	Junction Box Cross Arm Assembly for Mounting Two 970-201 Light Units. (Specify Pipe Size)	960-83

For Replacement Parts Listing see Pages 3-44 and 3-45.

Type 960-88 Junction Box Cross Arm For Two-Way Indication

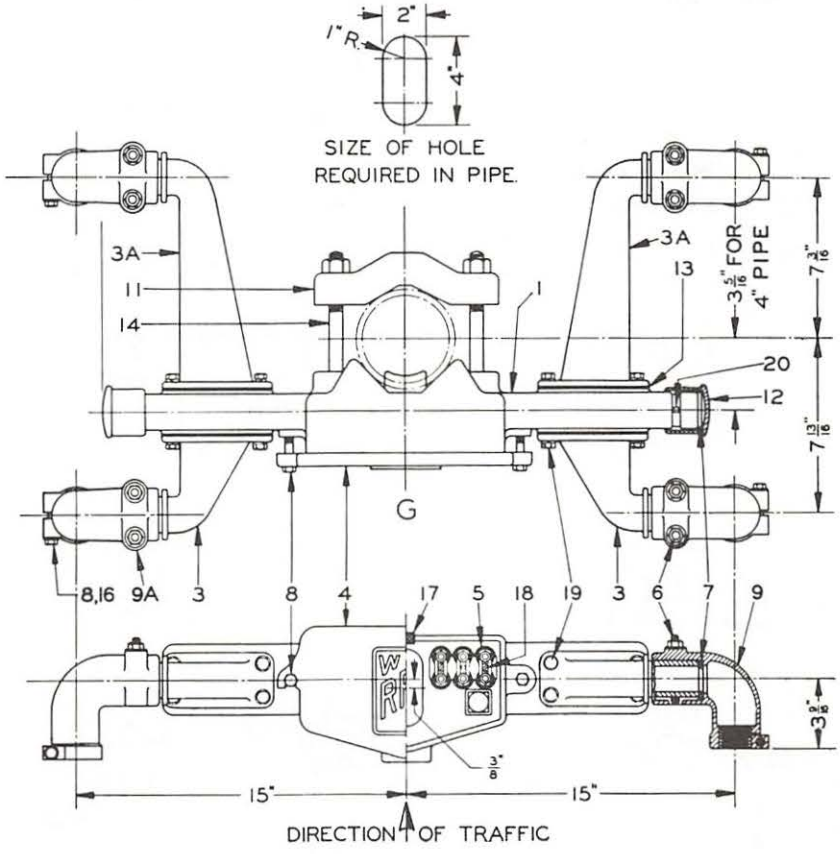

Ref. E3

Ref. No.	Description	Piece No.
E3	Junction Box Cross Arm Assembly for Mounting Four 970-201 Light Units. (Specify Pipe Size)	960-88

For Replacement Parts Listing see Pages 3-44 and 3-45.

Type 960-5XX Junction Box Cross Arm For Two-Way Indication

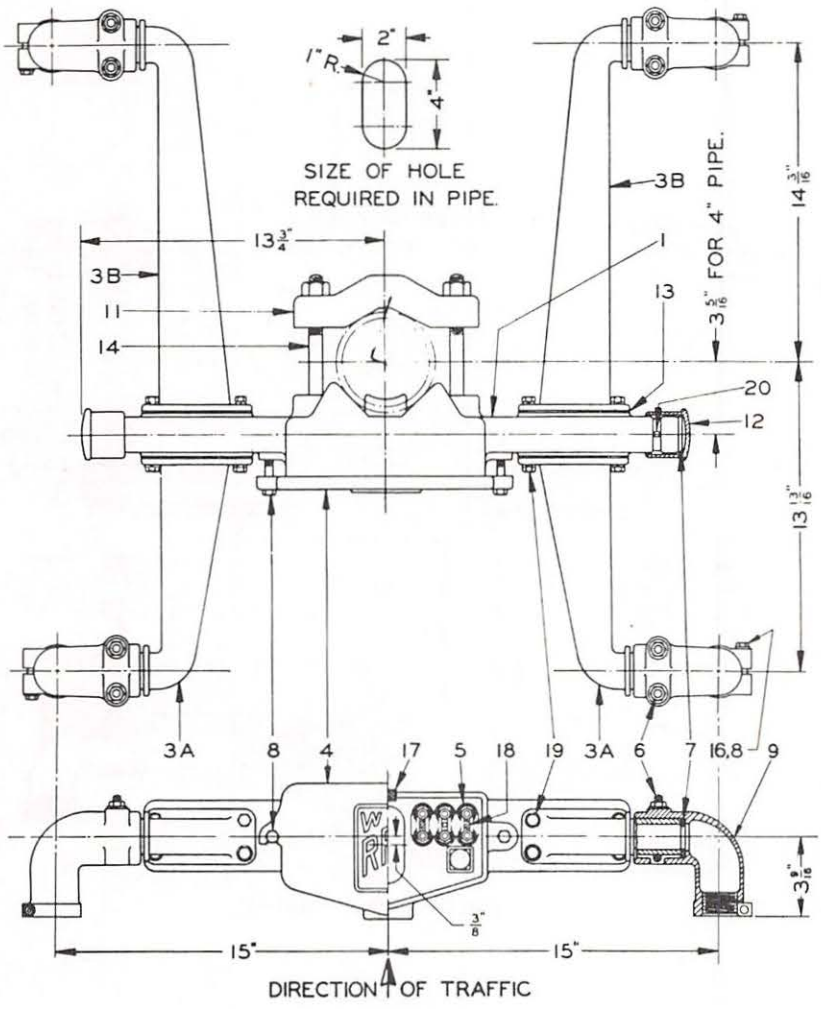

Ref. E4

Ref. No.	Description	Piece No.
E4	Junction Box Cross Arm Assembly for Mounting Four 970-201 Light Units (For 4" I.D. Pipe Mounting)	960-5XX

For Replacement Parts Listing see Pages 3-44 and 3-45.

Type 960-54 Junction Box Cross Arm For Two-Way Indication

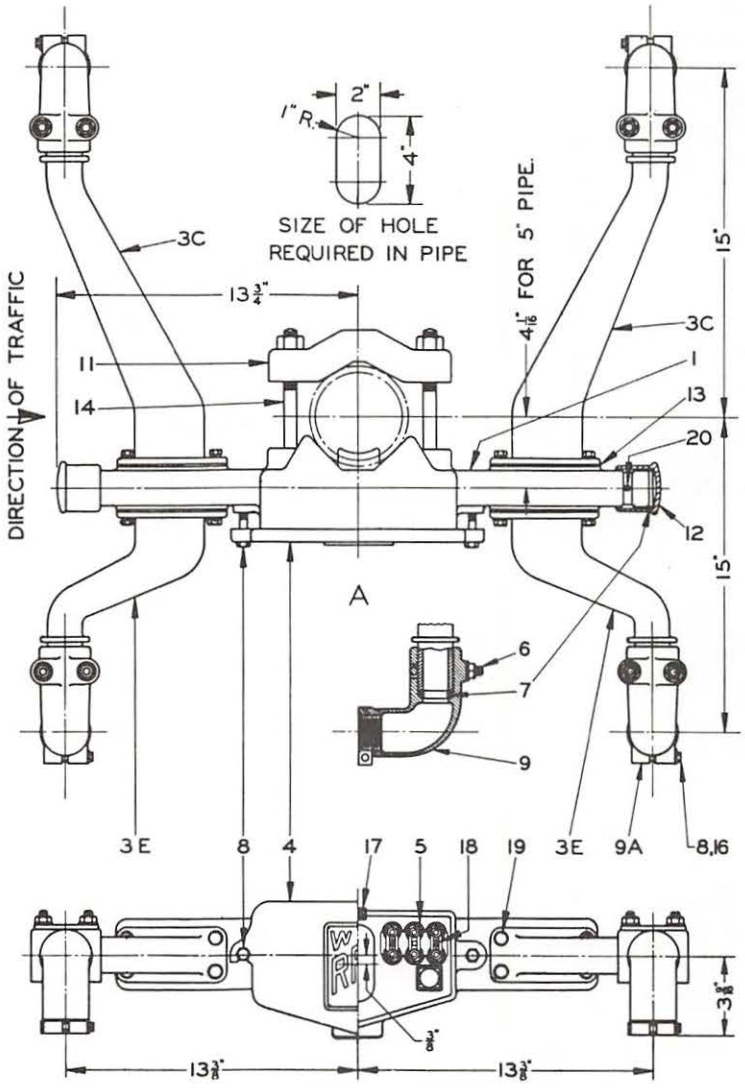

Ref. E5

Ref. No.	Description	Piece No.
E5	Junction Box Cross Arm Assembly for Mounting Four 970-201 Light Units (For 5" I.D. Pipe Mounting)	960-54

For Replacement Parts Listing see Pages 3-44 and 3-46.

Type 960-74R Junction Box Cross Arm For Two-Way Indication

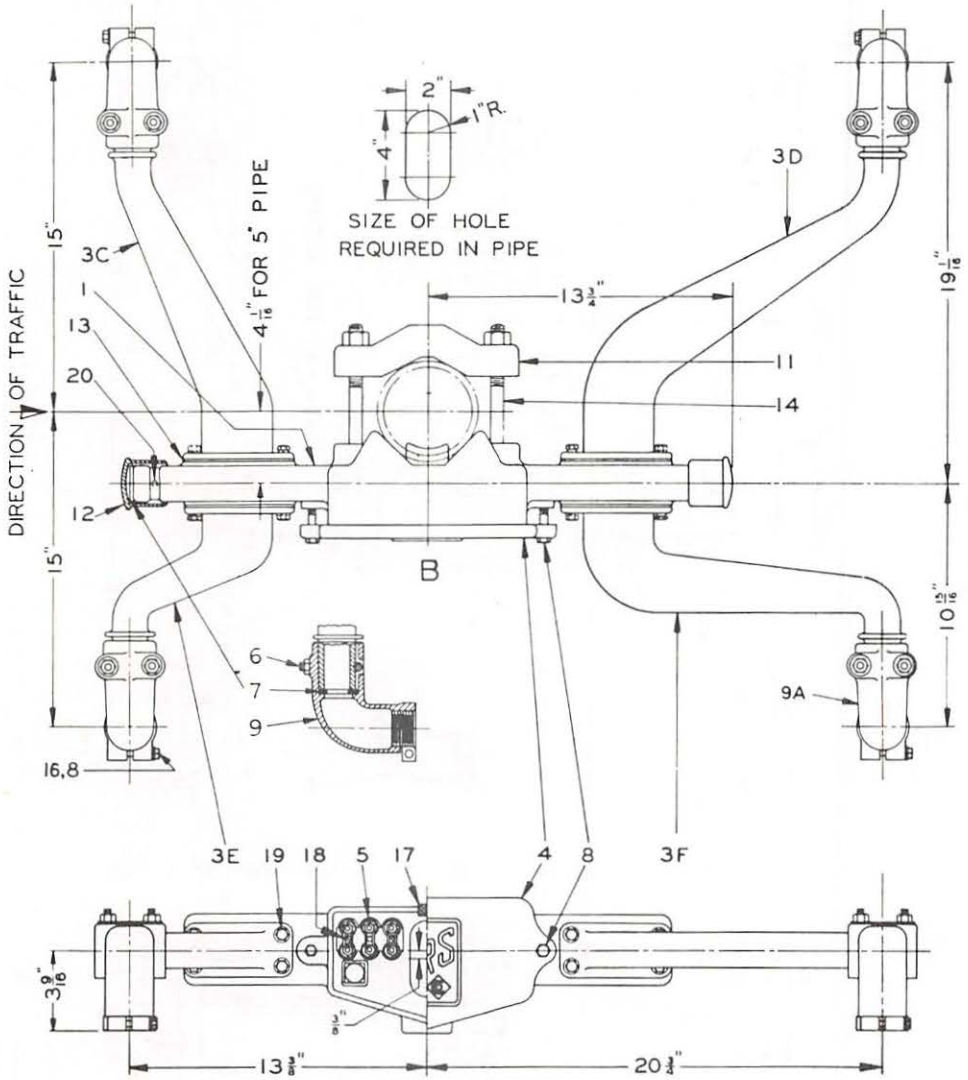

Ref. E6

Ref. No.	Description	Piece No.
E6	Junction Box Cross Arm Assembly for Mounting Four 970-201 Light Units (For 5" I.D. Pipe Mounting)	960-74R

For Replacement Parts Listing see Pages 3-44 and 3-45.

Type 960-84 Junction Box Cross Arm For Two-Way Indication

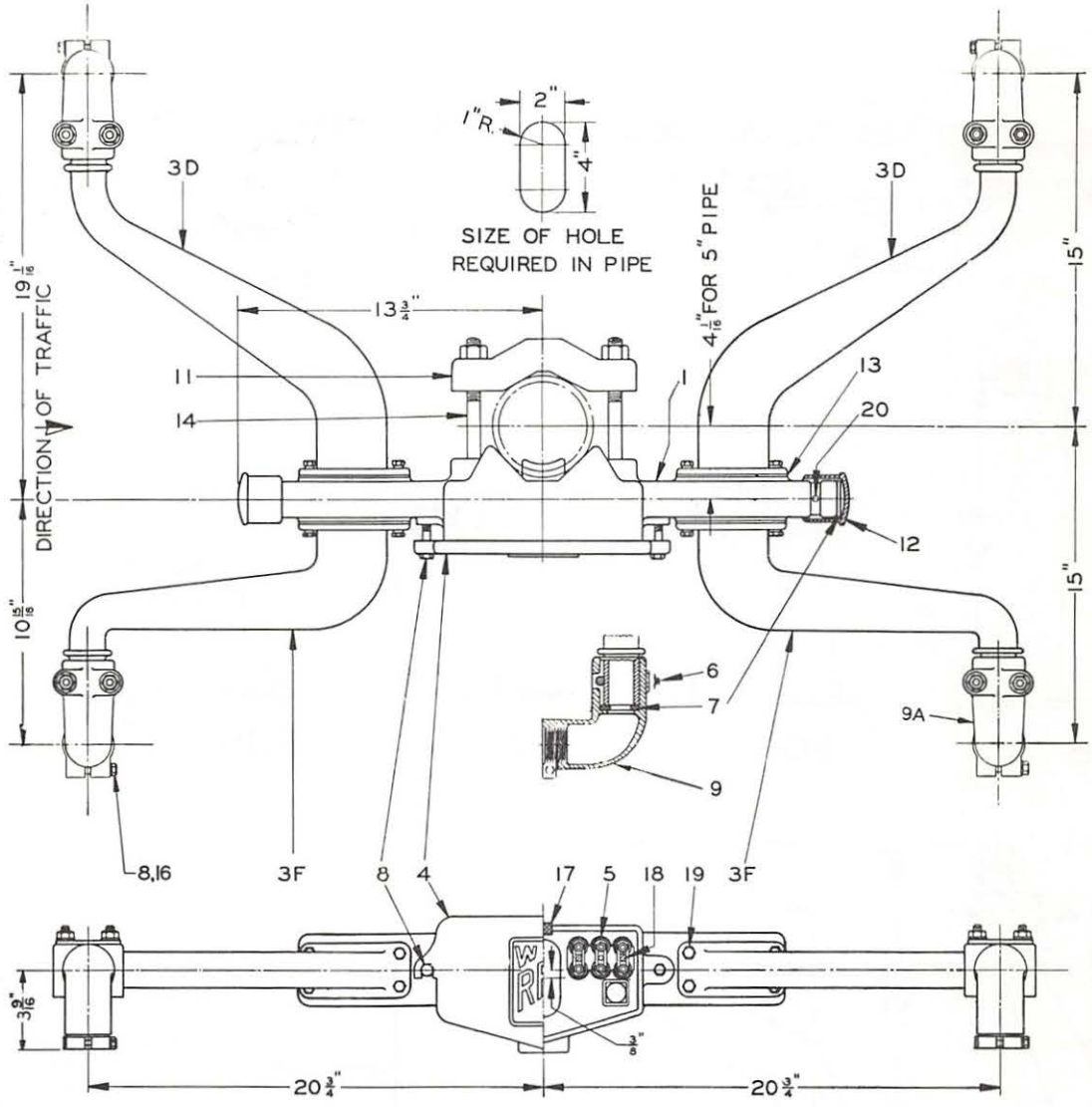

Ref. E7

Ref. No.	Description	Piece No.
E7	Junction Box Cross Arm Assembly for Mounting Four 970-201 Light Units (For 5" I.D. Pipe Mounting)	960-84

For Replacement Parts Listing see Pages 3-44 and 3-45.

Junction Box Cross Arms

REPLACEMENT PARTS LISTING FOR PAGES 3-37 TO 3-43

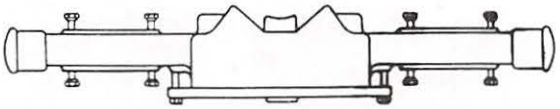

E 8

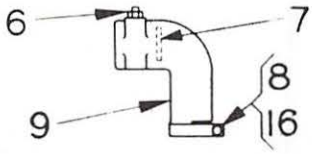

E 9

2

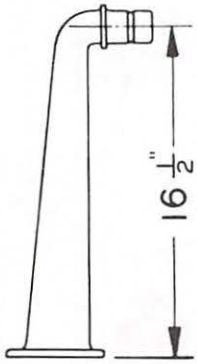

3B

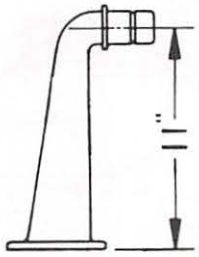

3G

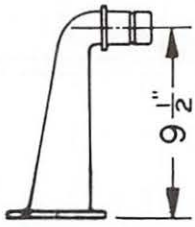

3A

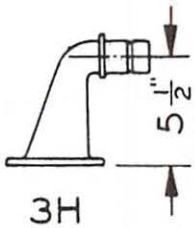

3H

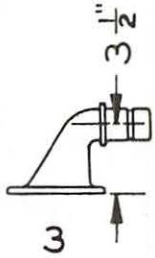

3

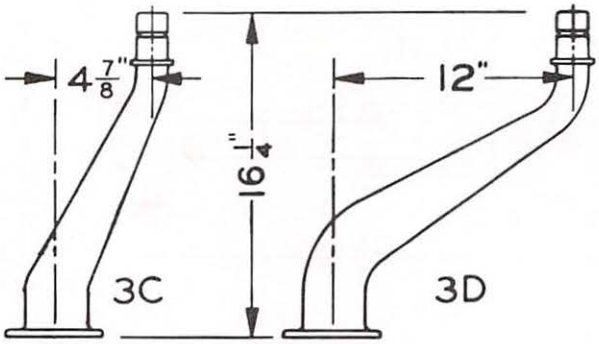

3C 3D

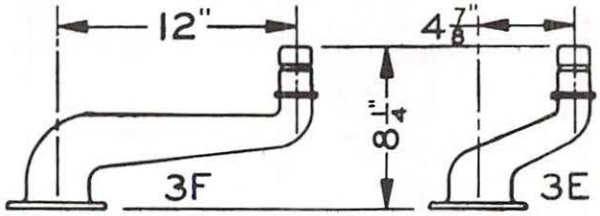

3F 3E

Junction Box Cross Arms

REPLACEMENT PARTS LISTING FOR PAGES 3-37 TO 3-43

Ref. No.	Description	Piece No.
E8	Sub-assembly of Junction Box Cross Arm (Includes Items 1, 4, 5, 7, 12, 15, 16, 18, 19 and 20)	950A-62
E9	Sub-assembly of Supporting Bracket (Includes Items 6, 7, 8, 9 and 16)	960A-163
	REPLACEMENT PARTS	
1	Junction Box Cross Arm (Casting only)	950A-22
2	Cover Plate	950A-39
3	Bracket 3½"	950A-57
3A	Bracket 9½"	950A-47
3B	Bracket 16½"	950A-46
3C	Bracket 16¼" x 4⅞"	950A-67
3D	Bracket 16¼" x 12"	950A-77
3E	Bracket 8¼" x 4⅞"	950A-66
3F	Bracket 8¼" x 12"	950A-76
3G	Bracket 11"	950A-37
3H	Bracket 5½"	950A-36
4	Cover, Complete with Packing	950A-21
5	Terminal Block, Complete	2506-106
6	"U" Bolt, ⅜"-16, Complete with Nuts	950-31
7	Gasket, Sponge Rubber	950-28
8	Cap Screw, ⅜"-16 x 2" Lg. hex. hd., stl.	
9	Supporting Bracket	960A-131
11	Adaptor Clamp	950A-34
12	Cap	950A-29
13	Gasket, Cork	950-27
14	Mach. Bolt, ⅝"-11 x 7½" Lg. sq. hd. stl. and hex. nut for 5" Pipe Mounting	
14A	Same as Ref. 14, but for 4" Pipe Mounting	
16	⅜" Lock Washer	
17	Torchwick Packing ⅜" Dia. x 27" Lg.	
18	Mach. Screw, No. 10-32 x ⅝" Lg. fil. hd., stl.	
19	Cap Screw, ⅜"-16 x ⅞" Lg. hex. hd.. stl. and Lock Washer	
20	Set Screw, ¼"-20 x ½" Lg., sq. hd. Cup Pt., stl.	

Type 2149 Junction Box Clamp Type Base

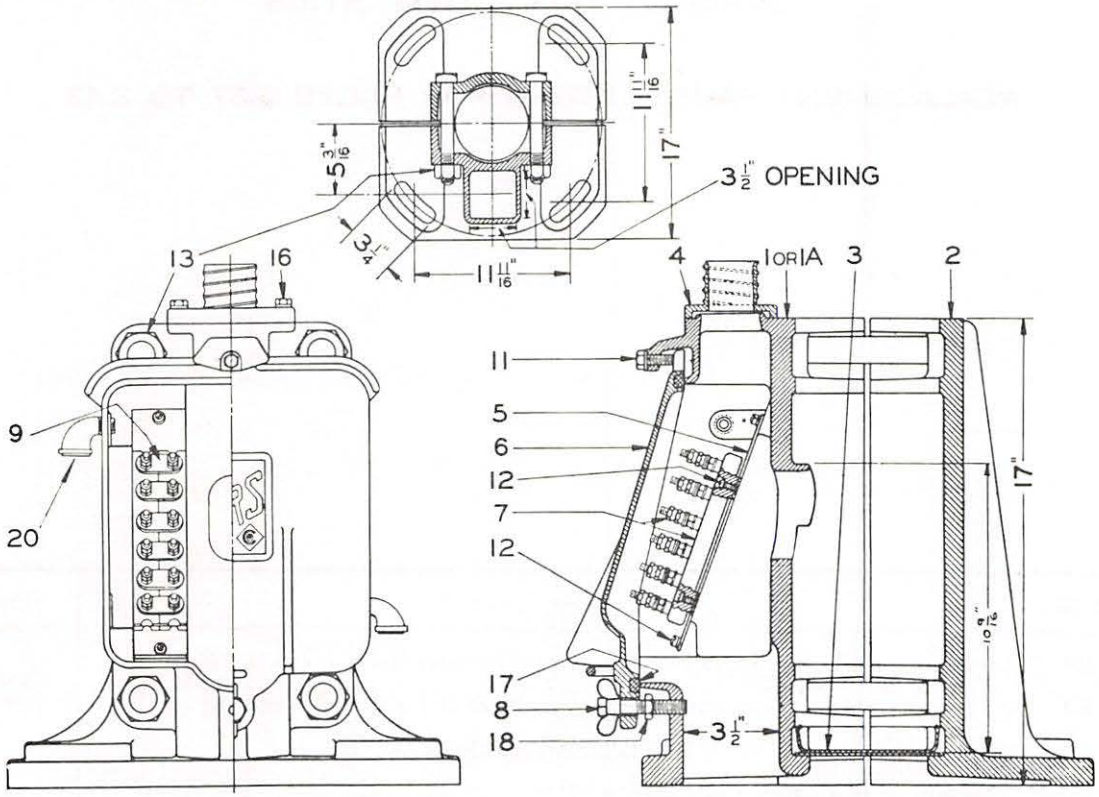

Ref. B9

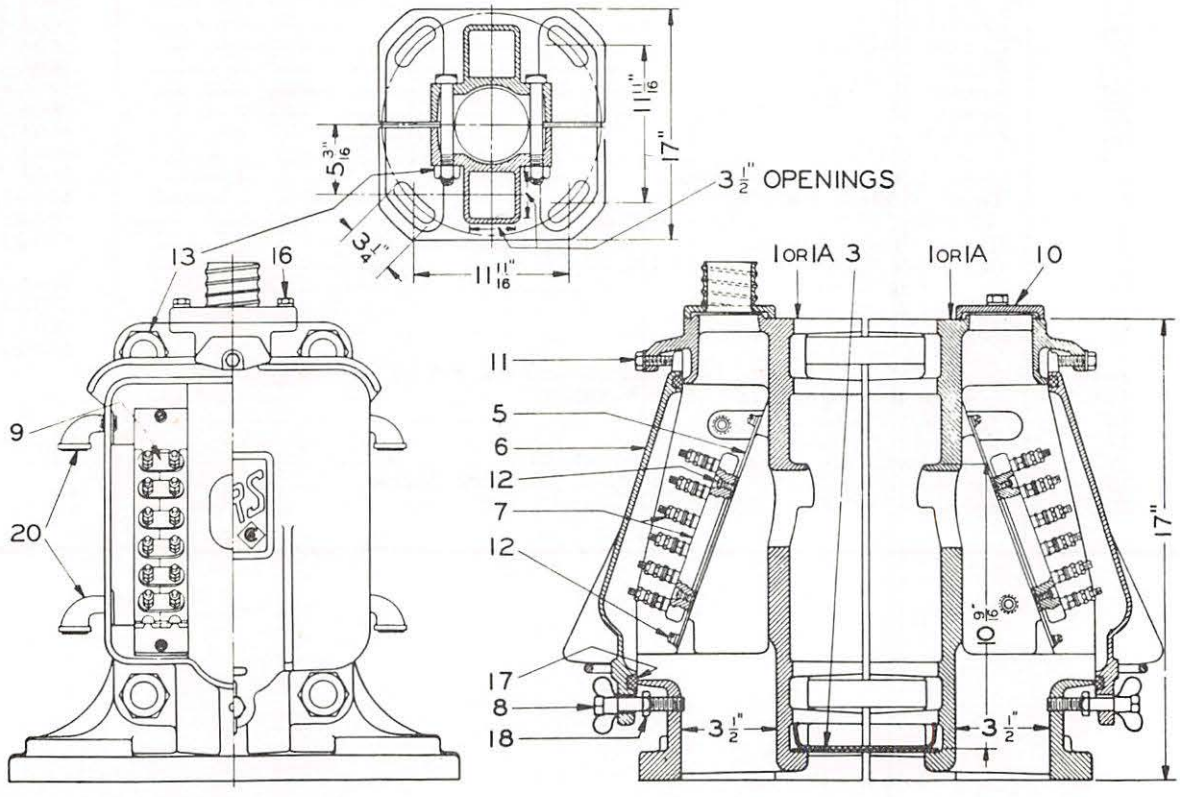

Ref. B11

Type 2149 Junction Box Clamp Type Base

Type 2149 Bases are regularly furnished with conduit flange (Ref. 4) for 1½" flexible metalic conduit unless specified for 2" conduit. A cover (Ref. 10A) tapped 1½" pipe thread is furnished for "sealtite" connector.

Ref. No.	Description	Piece No.
B9	Type 2149 Split base with one Junction Box half with 24 binding posts, ventilators and conduit flange. (Cast Iron)	2149-111C
B10	Same as Ref. B9, less ventilators	2149-111
B11	Same as Ref. B9, but with two Junction Box halves	2149-112E
B12	Same as Ref. B11, less ventilators	2149-112
	REPLACEMENT PARTS	
1	Junction Box Half, (Without Terminals, Cover, Ventilators and Fittings, for Ref. B10 and B12)	2149-15
1A	Same as Ref. 1, but for Ref. B9 and B11	2149-15C
2	Split Base Half	2149-13
3	Pipe Shield	2149-24
4	Conduit Flange for 1½" Conduit	2149-117
4A	Conduit Flange for 2" Conduit	2149-17
5	Terminal Mounting Plate	2149-25
6	Cover with Packing Ref. 17	2149-16
7	Terminal Strip (12 post)	2508-106
8	Thumb Screw	2149-18A
9	Connector	7323-2
10	Blank Cover	2149-22
10A	Cover Plate, tapped 1½" pipe thread	2149-22G
11	Cap Screw, ⅜"-16 x ⅞" Lg. hex. hd. stl. and plain washer	
12	Mach. Screw, ¼"-20 x ⅝" Lg. fil. hd. stl.	
13	Mach. Bolt, 1"-8 x 7½" Lg. sq. hd. stl. and hex. nut	
14	Pipe Plug, ¾" Std.	
15	Pipe Reducer Bushing, 1¼" x ¾" Std.	
16	Cap Screw, ⅜"-16 x 1⅛" Lg., hex. hd., stl. and lock washer	
17	Packing, Flax or Jute, ⅜" sq. x 3'-2½" Lg.	
18	Hex. Jam Nut, ½"-13 Std., stl.	
19	Pipe Plug, 1¼" Std.	
20	Ventilator	1143-16

Upper and Lower Supporting Brackets For Offset Mast Type Model 10 Signals Type 3565-65 Type 3565-67 Type 3565-367

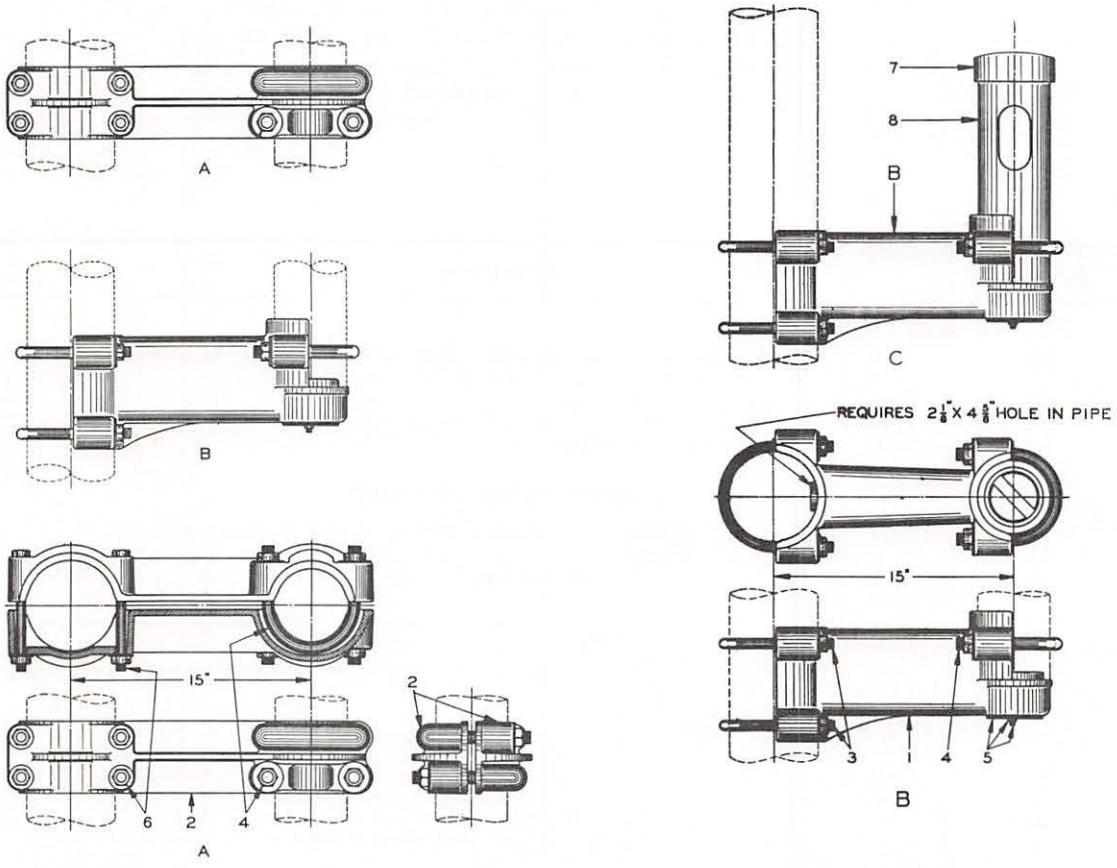

Ref. No.	Description	Piece No.
A	Upper Supporting Bracket Assembly	3565-65
B	Lower Supporting Bracket Assembly	3565-67
C	Supporting Bracket and Dowel Mast Assembly	3565-367
	REPLACEMENT PARTS	
1	Upper Bracket Casting Only	3565-69
2	Upper Bracket Casting Only	3565-68
3	"U" Bolt for 5" I.D. Pipe	1264-5
4	"U" Bolt for 4" I.D. Pipe	3565-163
5	Wire Opening Cover and Clamp Subassembly	3565-162A
6	Mach. Bolt, ⅝"-11 x 7" Lg. Sq. Hd. Steel, Hex. Steel Nut and Plain Washer	
7	Tap-on Pinnacle	110A-6
8	Dowel, 4" I.D. x 14" Lg. (May be turned in Socket to any Angle)	714-8

Upper and Lower Supporting Brackets For Offset Mast Type Model 10 Signals Type 3565-165 Type 3565-167 Type 3565-267

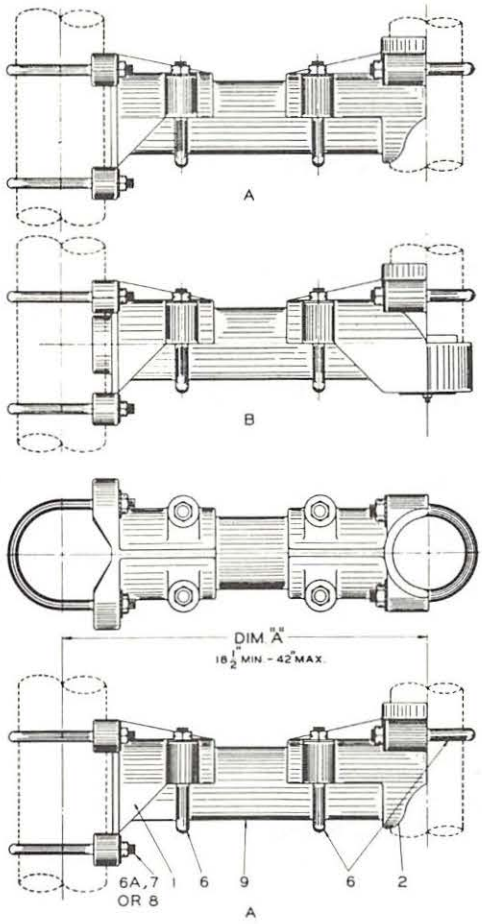

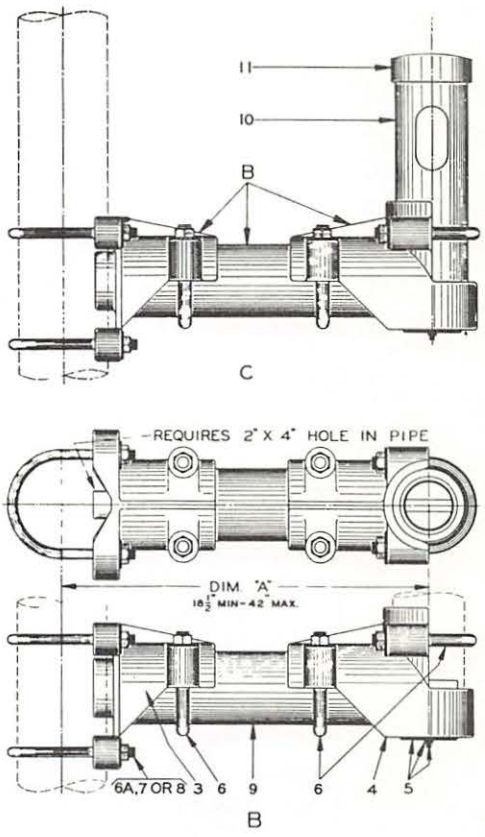

Ref. No.	Description	Piece No.
A	Upper Supporting Bracket Assembly (Specify Dimension "A" in inches)	3565-165
B	Lower Supporting Bracket Assembly (Specify Dimension "A" in inches)	3565-167
C	Supporting Bracket and Dowel Mast Assembly (Specify Dimension "A" in inches)	3565-267
	REPLACEMENT PARTS	
1	Inner Support	3565-169
2	Outer Support	3565-164
3	Inner Support	3565-168
4	Outer Support	3565-166
5	Wire Opening Cover and Clamp Sub-Assembly	3565-162A
6	"U" Bolt for 4" I.D. Pipe	3565-163
6A	"U" Bolt for 4" I.D. Pipe	1264-4
7	"U" Bolt for 5" I.D. Pipe	1264-5
8	"U" Bolt for 6" I.D. Pipe	1264-6
9	Pipe, 4" I.D. (Length as Required)	
10	Dowel, 4" I.D. x 14" Lg. (May be turned in Socket to any Angle)	714-8
11	Tap-on Pinnacle	110A-6

Extension Brackets For Crossing Signs Type 3366-40 Type 3366-140

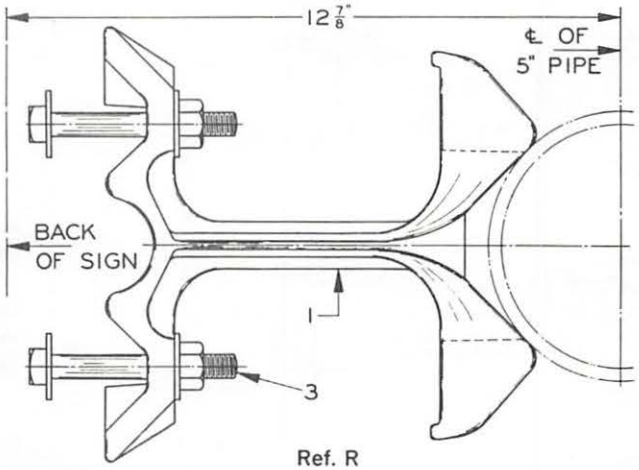

Ref. R

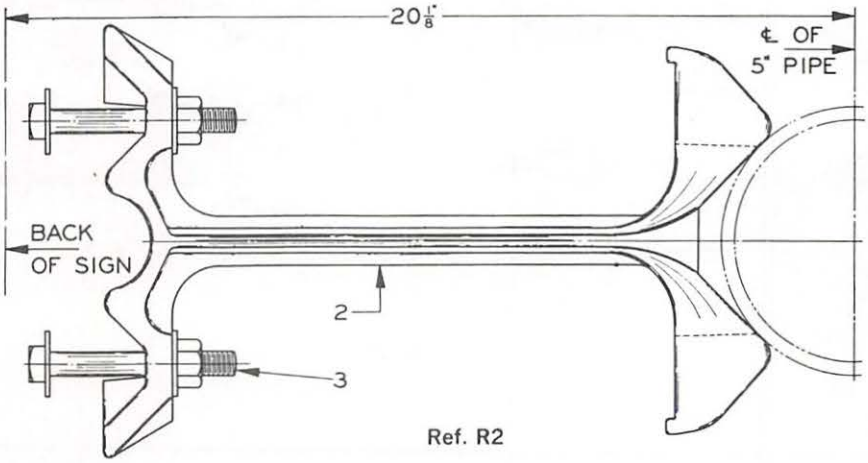

Ref. R2

Ref. No.	Description	Piece No.
R	Type 3366-40 Extension Bracket (Cast Iron) Complete with Bolts, Nuts and Washers	3366-40
R1	Same as Ref. R, but aluminum	3366A-40
R2	Type 3366-140 Extension Bracket (Cast Iron) Complete with Bolts, Nuts and Washers	3366-140
R3	Same as Ref. R2, but aluminum	3366A-140
	REPLACEMENT PARTS	
1	Extension Bracket, gray iron casting only	3366-41
1A	Same as Ref. 1, but aluminum casting	3366A-41
2	Extension Bracket, gray iron casting only	3366-141
2A	Same as Ref. 2, but aluminum casting	3366A-141
3	Mach. Bolt, ½"-13 x 4" Lg., sq. hd., stl., hex. nut and 2 Plain Washers	

MODEL 10-A HIGHWAY CROSSING SIGNAL WITH TYPE 3570 LIGHTWEIGHT MECANISM COMPLETE SIGNAL AND MECHANISM AND GATE ARM FOR ATTACHING TO EXISTING FLASHING LIGHT SIGNALS

CONTENTS

	Page No.
Model 10-A Signal Assembly	3-52 & 3-53
Arm Support Brackets and Counterweight Arm	3-54 & 3-55
Wood Gate Arms	3-56 to 3-59
Aluminum Gate Arm	3-60 & 3-61

WESTERN-CULLEN-HAYES, Inc.
2700 West 36th Place • Chicago, Illinois 60632 • Telephone: 312/254-9600 • Telex 25-3206

Model 10-A Highway Crossing Signal With Type 3570 Lightweight Gate Mechanism

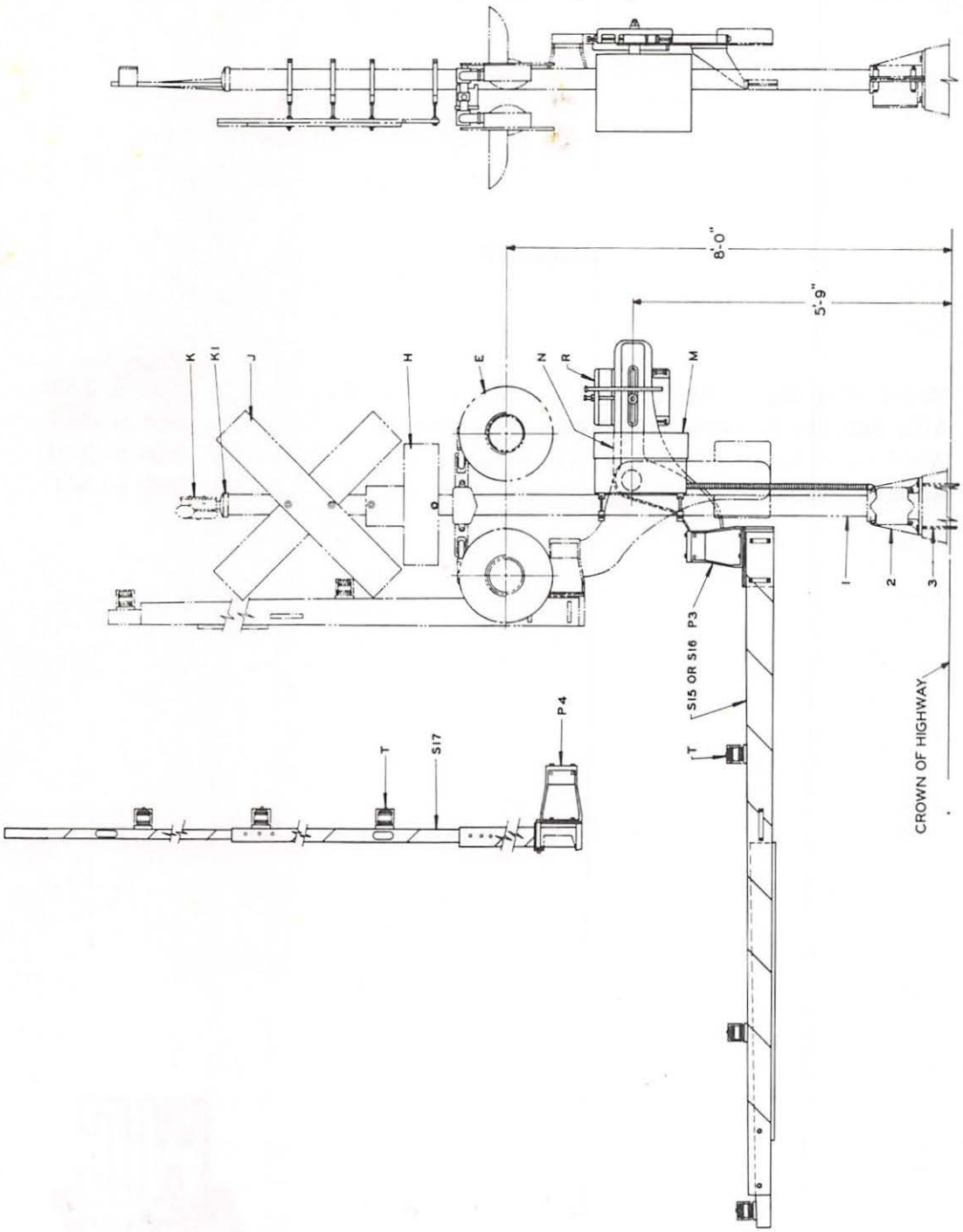

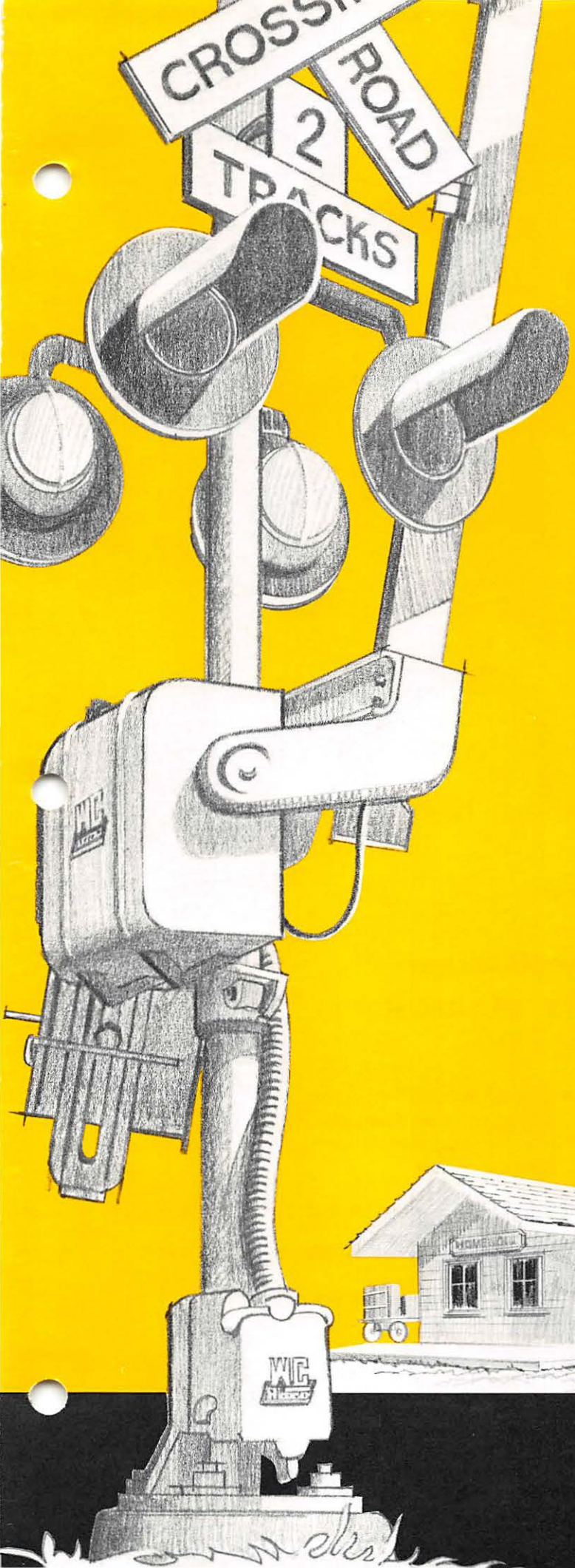

WESTERN · CULLEN · HAYES

model 10 signal featuring the

3590

series gate mechanism

a quality, long life mechanism
you can depend on for maximum
reliability & minimum maintenance

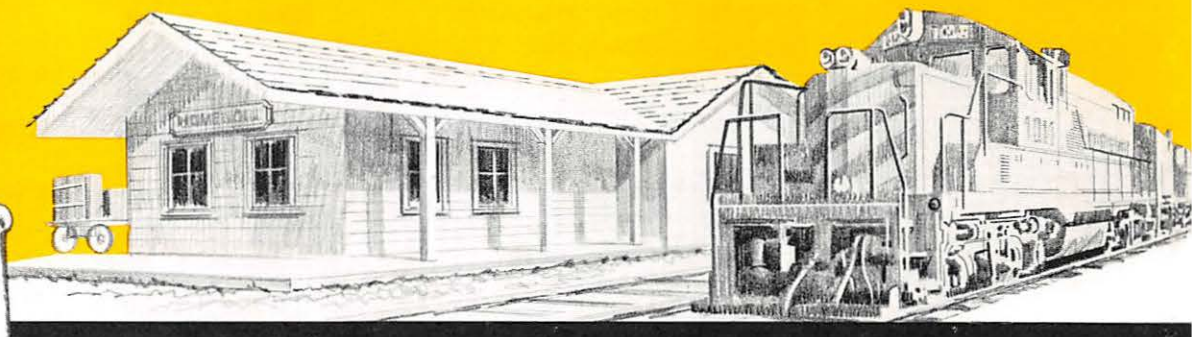

WC Hayes
WESTERN-CULLEN-HAYES, Inc.
2700 West 36th Place • Chicago, Illinois 60632
Telephone: 312/254-9600 • Telex 25-3206

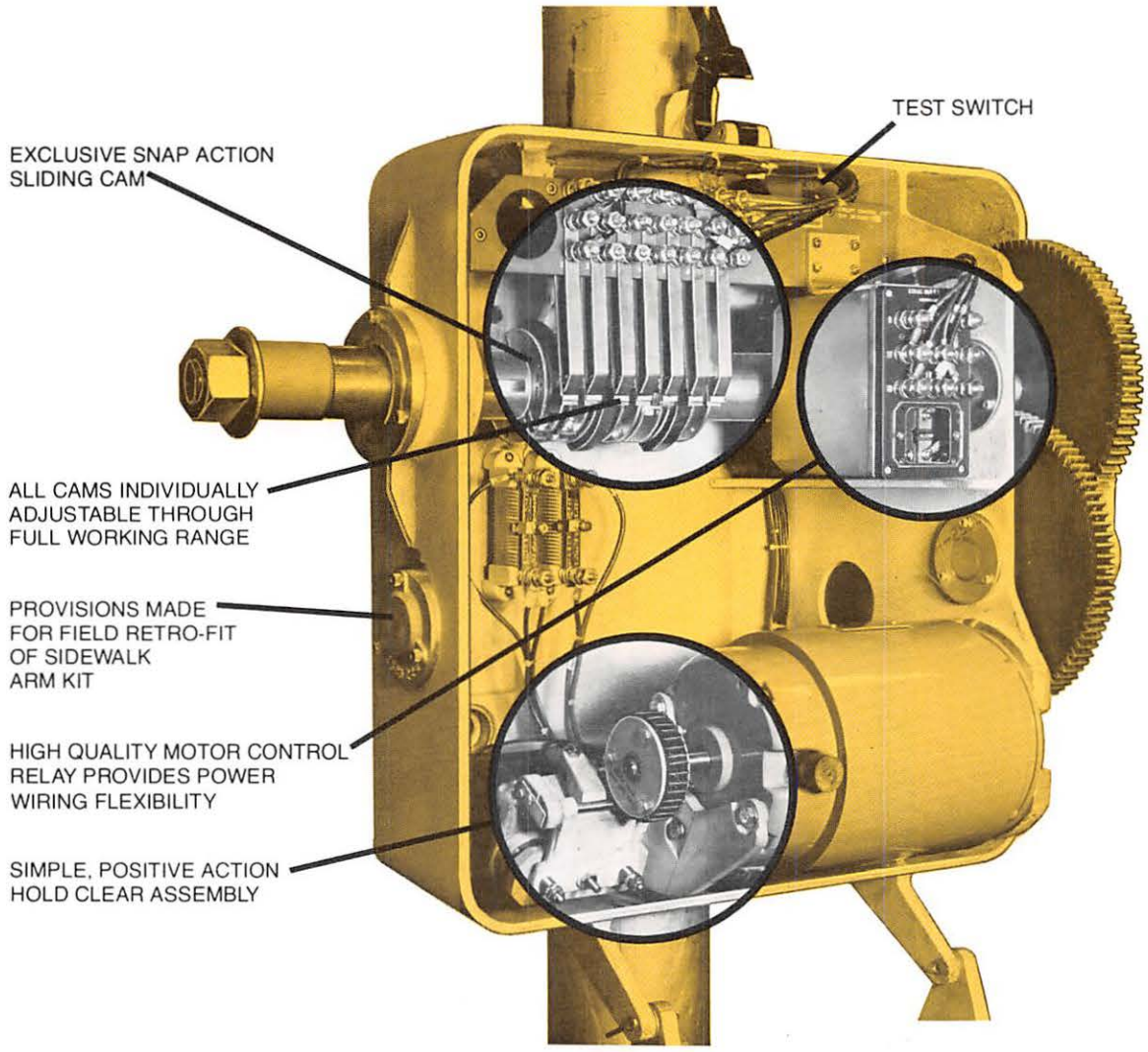

WESTERN·CULLEN·HAYES

3590 series gate mechanism

COMBINES MAXIMUM RELIABILITY, MINIMUM MAINTENANCE AND LONG LIFE

- Space for seven heavy duty contacts and cams. Motor control cam has exclusive sliding action—minimizes gate arm pumping and contact burning. All cams are adjustable thru their full working range and can be adjusted while in their working position.
- Fast clear time—means less gate arm breakage.
- Easy to service, all parts are readily accessible. Cover swings out of way for inspection. Optional tools and accessories facilitate installation, maintenance, and arm replacement.
- High quality Motor control relay provides power wiring flexibility. This feature permits replacing other type mechanisms with a 3590 mechanism when the wiring is already in place.
- "Flame Hardened" steel gear teeth—minimizes damage to gears if arm is broken; increases life, reduces maintenance. Intermediate gears are interchangeable.
- Sidewalk shaft—can be factory or field installed.
- Interchangeable parts—reduces parts inventory.
- All bearings are pre-lubricated and sealed—reduces maintenance and wear.
- Easily adjustable horizontal and vertical stops.
- Circuit diagram permanently affixed to inside cover.

EXCLUSIVE MOTOR CONTROL SNAP ACTION SLIDING CAM U.S. Patent No. 4057208

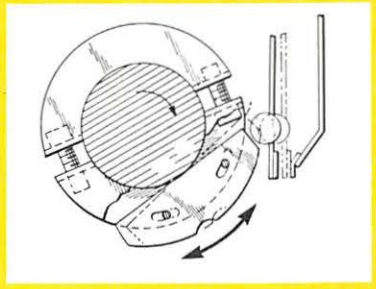

Reduces the possibility of gate arm pumping—minimizes contact burning. All other cams are interchangeable.
Cam slides forward to allow arm to raise to proper position, then snaps backward allowing fast contact opening. This helps eliminate arcing and pumping.

INDIVIDUALLY ADJUSTABLE CAMS

Allows greater flexibility to adjust arm travel and positioning. Spare cams and contacts allow variety of field wiring options to meet individual requirements.

MOTOR CONTROL RELAY

3590 and 3593 versions are determined by this relay and minor wiring changes. 3590 accommodates three power wires. 3593 allows use of two power wires—power down control is switched through this safety grade relay. The relay is energized with gate in the up position.

HOLD CLEAR ASSEMBLY

The single most important sub-assembly—ensures reliability.

Non-dragging Pawl and Ratchet Wheel reduces wear. The One Way Ramp and Roller Mechanical Clutch ensure positive stop. Reversible Pawl reduces maintenance costs. Non-locking angles between Pawl and Ratchet Wheel provide increased safety.

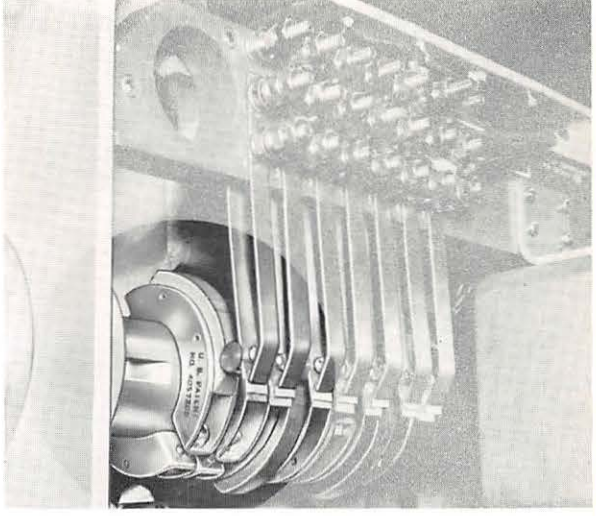

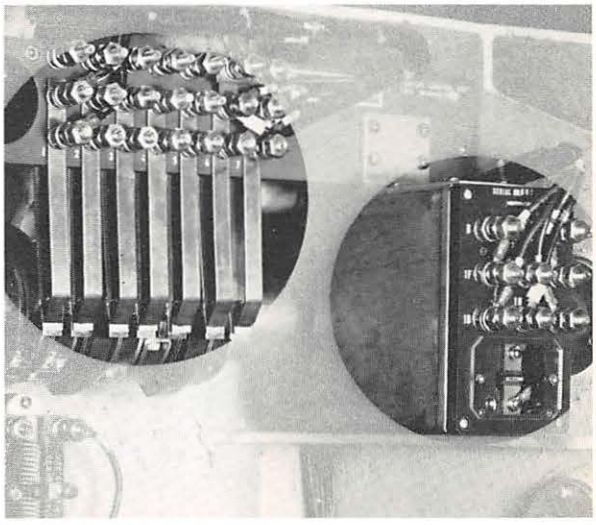

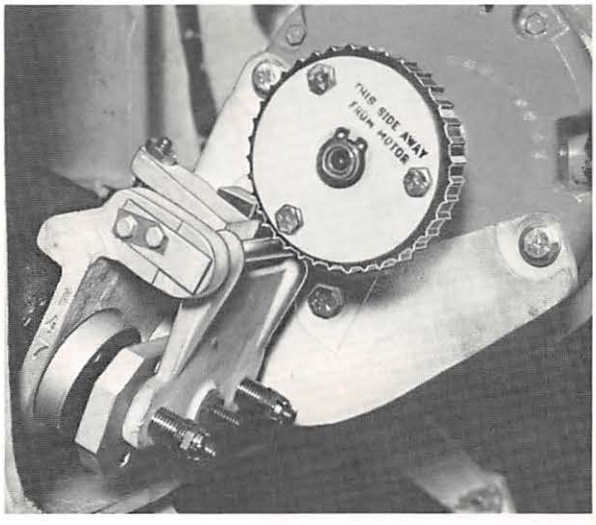

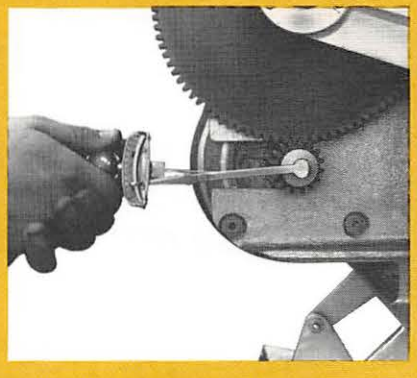

OPTIONAL PRODUCTS

- W-C-H Torque Wrench permits making quick and easy torque measurements. The Wrench is calibrated directly in foot-pounds (referenced to the main shaft), eliminating the need for coversion charts. Measuring can be accomplished from the ground by one man.
- Tool Kits—Maintainers and Installer/Supervisor.
- Sidewalk shaft—installed at factory or provision to install in field.
- Variety of Gate Arms.
- Heater.
- Spring Scale—for torque measurements.
- All Temperature Gear Grease.

WESTERN·CULLEN·HAYES
signal products

Western-Cullen-Hayes has more than 80 years of experience in Highway-Crossing equipment, plus a reputation for the most dependable products in the field. In addition to our 3590 Series Gate mechanisms and our Model 10 Crossing Signal, we can meet your needs with other Signaling products.

GATE MECHANISM ORDERING REFERENCES

3590-131 3 Power Wire Control
3593-131 2 Power Wire Control
3590-132 3 Power Wire Control with sidewalk shaft
3593-132 2 Power Wire Control with sidewalk shaft

ACCESSORIES
3590-K9 Vertical Torque Wrench Kit
3562-210 Torque Adjusting Scale
38-0045-287 Heater
3590-1650 All Temp. Lubricating Grease for Gears

OTHER PRODUCTS

LIGHTS
8⅜" & 12"

ROUNDELS
To meet various requirements for 8⅜" and 12" Lights

1592—7" Gate Lights

GATE LIGHTS
1590—Fresnel Lens
1591—4" Circular Lens
1592—7" Circular Lens

SIGNS
Cross Buck
No. of Track
Advance Warning Sign

GATE ARMS
Wooden
Fiberglass
Aluminum/Fiberglass Combination

HIGHWAY/RR
0333—Crossing Bell

CROSSING WARNING SYSTEMS
Material, Engineering, or Completely Wired Cases

OTHER PRODUCTS
Lighting Transformers
Rectifiers
Terminal Strips
Lightning Arresters
Test Instruments
Rail Bonding Drills and Bits
Track Drills and Bits

TERMINAL BOXES
Fiberglass Battery Boxes
Pole Mount Instrument Cases
Pole Mount Terminal and Arrester Boxes

OTHER W-C-H SIGNAL SUPPORT STRUCTURES

Walkout Cantilever pictured above meets applicable AAR & AASTHO Specifications.

Rotatable Cantilever meets AAR Recommendations.

Signal Bridges —Standard or Custom designs.

Flashing Light Signals —Standard of the industry for many years.

For further information write or call 312/254-9600 or your W-C-H Representative.

WESTERN-CULLEN-HAYES, Inc.
2700 West 36th Place • Chicago, Illinois 60632
Telephone: 312/254-9600 • Telex 25-3206

Printed in U.S.A.
M4M578

NO. 3567, TYPE "D" CROSSING GATE MECHANISM AND REPLACEMENT PARTS

CONTENTS

Mechanism Complete	3-142 to 3-144
Mechanism Detail Parts	3-142 to 3-145
Circuit Controler Detail Parts	3-146 & 3-147
Counter Assembly Complete	3-147
Motor and Hold-Clear Assembly Detail Parts	3-148 & 3-149
Brush Holder Detail Parts	3-150 & 3-151
Hold-Clear Detail Parts	3-150 & 3-151
Heater Complete	3-151

WC Hayes
WESTERN-CULLEN-HAYES, Inc.
2700 West 36th Place • Chicago, Illinois 60632 • Telephone: 312/254-9600 • Telex 25-3206

1967

No. 3567, Type "D" Crossing Gate Mechanism

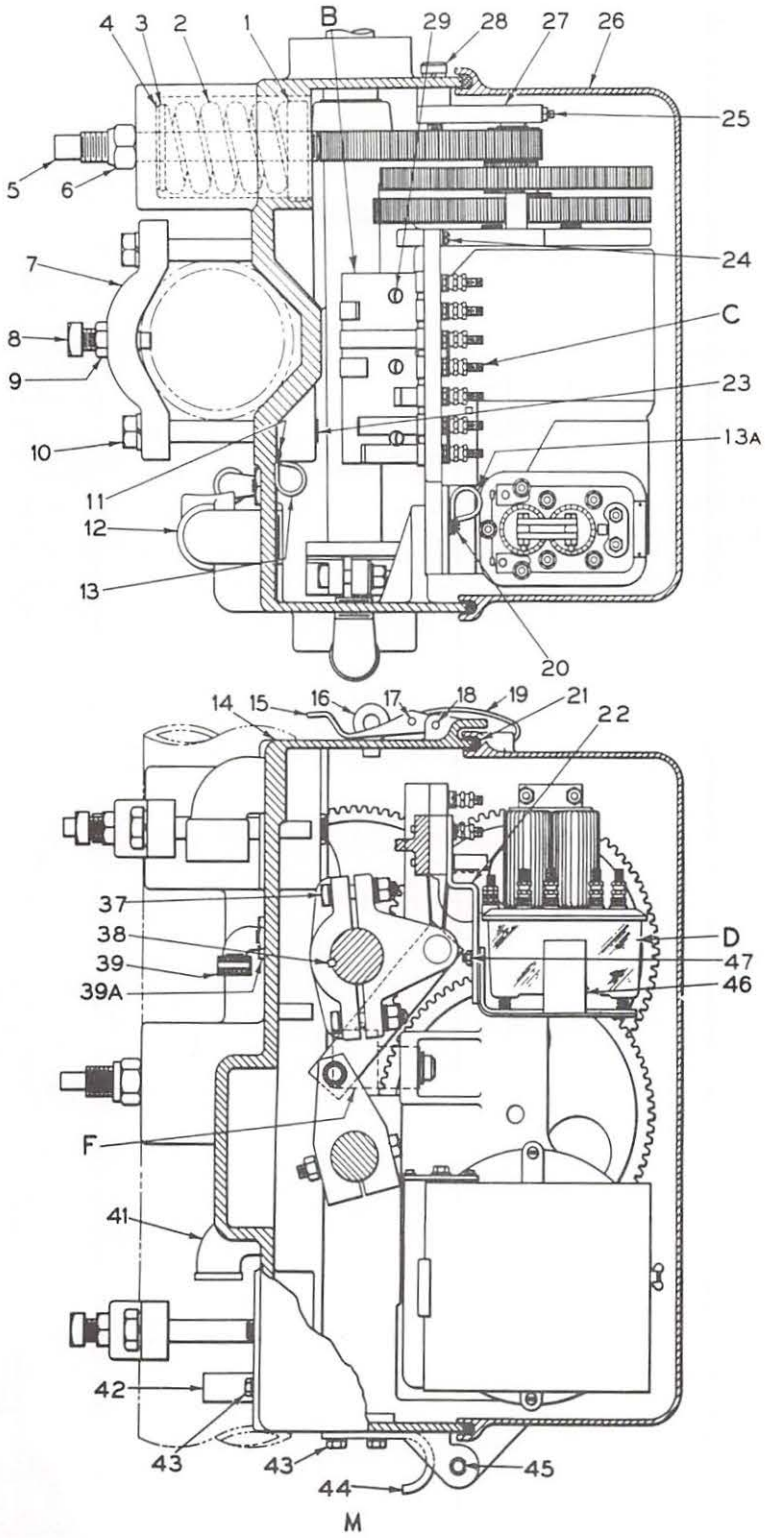

No. 3567, Type "D" Crossing Gate Mechanism

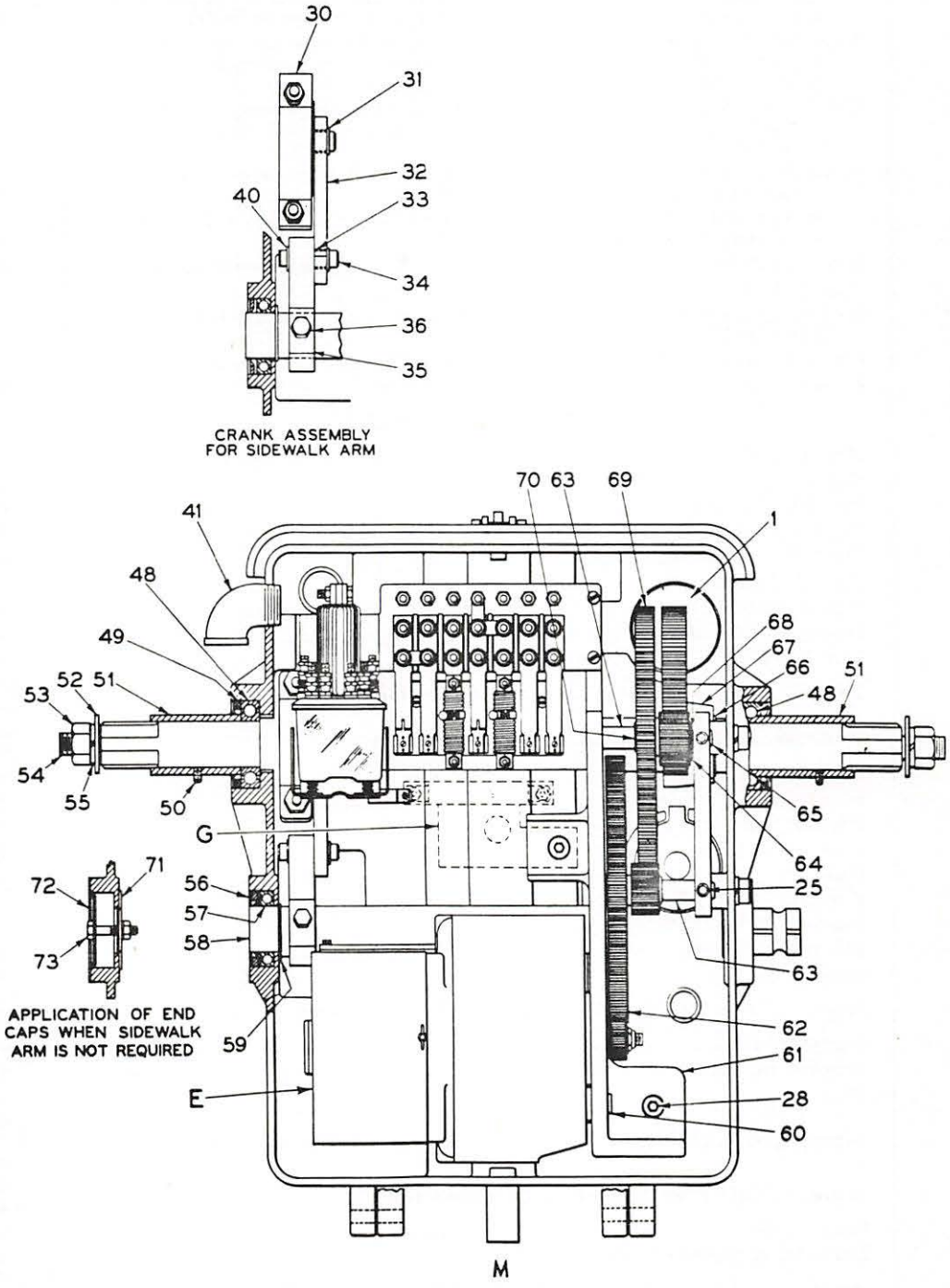

No. 3567, Type "D" Crossing Gate Mechanism

Ref. No.	Description	Piece No.
M	Type "D" Crossing Gate Mechanism Complete, for roadway arm only (without sidewalk arm shaft) with 12 — 20 volt D.C. motor and clamps for mounting on 5" I.D. pipe post. Does not include counter or heater	3567-131
M1	Type "D" Crossing Gate Mechanism Complete, for roadway and sidewalk arms, with 12 — 20 volt D.C. motor and clamps for mounting on 5" I.D. pipe post. Does not include counter or heater	3567-132
A2	Kit of Parts Required to Add Sidewalk Arm Shaft to Mechanism, Ref. M. Includes 1 each Ref. 30, 31, 32, 34, 35, 36, 38 and 58; 2 each Ref. 37, 40, 56, 57 and 59	17550-6 Gr. 1
B	Circuit Controller Commutator Complete, for 0° — 90° Operation. For details and ordering references see Page 3-147	23447 Gr. 1
B1	Circuit Controller Commutator Complete, for 0° — 75° Operation. For details and ordering references see Page 3-147	23447 Gr. 2
C	Contact Block Complete. For details and ordering references see Page 3-147	43119-8 Gr. 1
D	Type K Relay, 2FB, 280 - Ohms	53000-285 Gr. 70
E	Motor Complete, 12 — 20 volts D.C. For details and ordering references see Page 3-149	29890-12 Gr. 1
F	Counter Complete. For details and ordering references see Page 3-147	38408-1 Gr. 1
G	Heater Complete. For details and ordering references see Page 3-151	56090-28 Gr. 1
	REPLACEMENT PARTS	
1	Nut, 1"-8, for spring	49513-3
2	Spring, buffer	786-294
3	Washer, 3¼" O.D., for spring	626-199
4	Washer, 3⅛" O.D., for washer Ref. 3	1333-32
5	Stud, 1"-8, for adjusting spring	441-754
6	Nut, elastic stop, 1"-8, for stud	42333-36
7	Clamp, for 5" I.D. pipe	4137-32
8	Screw, ¾"-10 x 2½" sq. hd., for clamp	6954-7
9	Nut, ¾"-10 x 7/16" hex., for screw	4364
10	Bolt, ¾"-10 x 5½" hex. hd., with lock washer, for clamp	894-44 029
11	Screw, No. 10-32 x ½" rd. hd. with lock washer, for wire hangers	3044-9 53029-7
12	Coupling Complete, 90°, for 1½" flexible conduit	45688-113 Gr. 1
13	Hanger, wire. (two required)	29855-2
13A	Hanger, wire. (one required)	29855-12
14	Case, only	59837-1
15	Hasp	16110-23
16	Eyebolt, ¼"-20 x 7/16" long	45818-15
17	Pin, roll, ¼" x 1½", for strap	17188-22
18	Pin, roll, ¼" x 2¼", for hasp	17188-23
19	Strap	30804-6
20	Screw, ¼"-20 x 1¼", fil. hd., with lock washer, for bracket	45572-15 0510-1
21	Gasket, 6'-11" long, for cover	43460-12
22	Bracket, for supporting relay	40539-250
23	Plug	20132
24	Screw, ¼"-20 x 1¼", fil. hd., with washers, for mounting contact block	45572-15 2549-2 0510-1
25	Screw, ¼"-20 x 1" sq. hd., with nut, for plate Ref. 27	6954-8 424-5
26	Cover, only	57523-4
27	Plate, for supporting shaft	41855-130
28	Screw, shouldered, socket-head, with lock washer, for plate Ref. 27	17708-52 0113-2

(Continued on opposite page)

No. 3567, Type "D" Crossing Gate Mechanism

(continued)

Ref. No.	Description	Piece No.
29	Screw, shouldered, socket-head, with lock washer, for commutator	17708-55 0623-1
30	Crank Complete	14915-3 Gr. 1
31	Ring, retaining	5713-69
32	Link, for operating sidewalk arm	9098-3 Gr. 1
33	Bushing, 5/8" dia., for link	6714-329
33A	Bushing, 3/4" dia., for link	6714-330
34	Pin, 5/8" dia., x 2 3/8" long, for crank	504-99
35	Crank	57520-3
36	Bolt, 1/2"-13 x 3 1/2", hex. hd., with nut and lock washer	0439-1 091-9
37	Bolt, 1/2"-13 x 2 1/2", sq. hd., with hex. nut and lock washer, for crank	092-2 091-9
38	Key No. 21, for shaft	0387
39	Cable Grip, 90°, 1/2" pipe thd., for .375" to .500" O.D. cable	DB990
39A	Pipe Reducer Bushing, 3/4"-1/2", for connector	
40	Ring, retaining	5713-68
41	Ventilator	52981 Gr. 1
42	Clamp, for conduit	641-47
43	Screw, 5/16"-18 x 3/4", hex. hd., with lock washer, for clamp and spring	0441-3 0623-1
44	Spring, stop, for cover	16111-150
45	Pin, roll, 1/2" x 2", for cover	17188-39
46	Bracket Complete, for supporting relay	42819-1 Gr. 1
47	Screw, 1/4"-20 x 5/8", hex. hd., with hex. nut and lock washer, for fastening bracket Ref. 46 to bracket Ref. 22	54972-1 424-5 0510-1
48	Bearing, for each end of shaft Ref. 54	49536-96
49	Seal, for bearing Ref. 48	29417-2
50	Screw, set, for spacers	17708-9
51	Spacer, for each end of shaft	35463-9
52	Washer, for each end of shaft	381-1
53	Nut, 1 1/4"-7, hex., for each end of shaft	2813-3
54	Shaft, main, 1 1/4"-7 thread each end	57524-3
54A	Shaft, main, complete with 2 each Ref. 52, 53 and 55 (Replaces shaft with 7/8" - 9 thd. each end)	57524-3 381-1 0871-4 2813-3
55	Lock Washer, for nut Ref. 53	0871-4
56	Seal, for bearings Ref. 57	29417-3
57	Bearing, for each end of shaft Ref. 58	49536-95
58	Shaft, for sidewalk arm	29839-8
59	Ring, retaining, for shaft	5713-70
60	Screw, 1/2", with lock washer, for mounting motor	17708-54 091-9
61	Frame, only	59839-1
62	Gear and Pinion, first intermediate	23410
63	Spacer	38165-77
64	Spacer	38165-78
65	Pin, dowel, for gear shaft	504-424
66	Ring, retaining	5713-29
67	Sector	29830-7
68	Washer, for spacer	43209-12
69	Gear and Pinion, second intermediate	23410-1
70	Bearing and Roller	49536-92
71	Washer, inside	626-204
72	Washer, outside	626-200
73	Screw, 1/4"-20 x 1 1/2", hex. hd., with hex. nut and lockwasher, for washers Ref. 71 and 72	29757-11 424-5 0510-1

31	Counter, only	20567
32	Bracket, for mounting counter	55478-35 Gr. 1

No. 3567, Type "D" Crossing Gate Mechanism

CIRCUIT CONTROLLER

No. 3567, Type "D" Crossing Gate Mechanism

MOTOR AND HOLD-CLEAR DETAILS

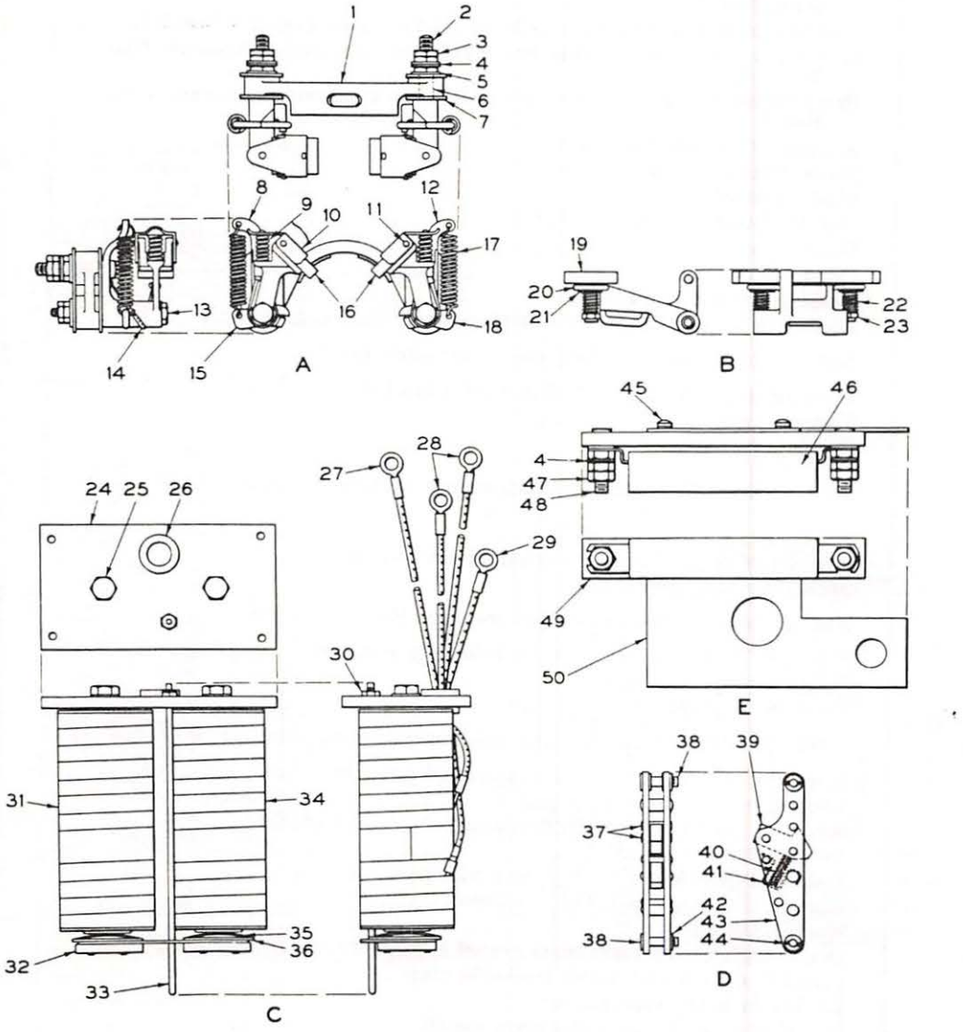

No. 3567, Type "D" Crossing Gate Mechanism

(continued)

Ref. No.	Description	Piece No.
29	Screw, shouldered, socket-head, with lock washer, for commutator	17708-55 0623-1
30	Crank Complete	14915-3 Gr. 1
31	Ring, retaining	5713-69
32	Link, for operating sidewalk arm	9098-3 Gr. 1
33	Bushing, 5/8" dia., for link	6714-329
33A	Bushing, 3/4" dia., for link	6714-330
34	Pin, 5/8" dia., x 2 3/8" long, for crank	504-99
35	Crank	57520-3
36	Bolt, 1/2"-13 x 3 1/2", hex. hd., with nut and lock washer	0439-1 091-9
37	Bolt, 1/2"-13 x 2 1/2", sq. hd., with hex. nut and lock washer, for crank	092-2 091-9
38	Key No. 21, for shaft	0387
39	Cable Grip, 90°, 1/2" pipe thd., for .375" to .500" O.D. cable	DB990
39A	Pipe Reducer Bushing, 3/4"-1/2", for connector	
40	Ring, retaining	5713-68
41	Ventilator	52981 Gr. 1
42	Clamp, for conduit	641-47
43	Screw, 5/16"-18 x 3/4", hex. hd., with lock washer, for clamp and spring	0441-3 0623-1
44	Spring, stop, for cover	16111-150
45	Pin, roll, 1/2" x 2", for cover	17188-39
46	Bracket Complete, for supporting relay	42819-1 Gr. 1
47	Screw, 1/4"-20 x 5/8", hex. hd., with hex. nut and lock washer, for fastening bracket Ref. 46 to bracket Ref. 22	54972-1 424-5 0510-1
48	Bearing, for each end of shaft Ref. 54	49536-96
49	Seal, for bearing Ref. 48	29417-2
50	Screw, set, for spacers	17708-9
51	Spacer, for each end of shaft	35463-9
52	Washer, for each end of shaft	381-1
53	Nut, 1 1/4"-7, hex., for each end of shaft	2813-3
54	Shaft, main, 1 1/4"-7 thread each end	57524-3
54A	Shaft, main, complete with 2 each Ref. 52, 53 and 55 (Replaces shaft with 7/8" - 9 thd. each end)	57524-3 381-1 0871-4 2813-3
55	Lock Washer, for nut Ref. 53	0871-4
56	Seal, for bearings Ref. 57	29417-3
57	Bearing, for each end of shaft Ref. 58	49536-95
58	Shaft, for sidewalk arm	29839-8
59	Ring, retaining, for shaft	5713-70
60	Screw, 1/2", with lock washer, for mounting motor	17708-54 091-9
61	Frame, only	59839-1
62	Gear and Pinion, first intermediate	23410
63	Spacer	38165-77
64	Spacer	38165-78
65	Pin, dowel, for gear shaft	504-424
66	Ring, retaining	5713-29
67	Sector	29830-7
68	Washer, for spacer	43209-12
69	Gear and Pinion, second intermediate	23410-1
70	Bearing and Roller	49536-92
71	Washer, inside	626-204
72	Washer, outside	626-200
73	Screw, 1/4"-20 x 1 1/2", hex. hd., with hex. nut and lockwasher, for washers Ref. 71 and 72	29757-11 424-5 0510-1

No. 3567, Type "D" Crossing Gate Mechanism

CIRCUIT CONTROLLER

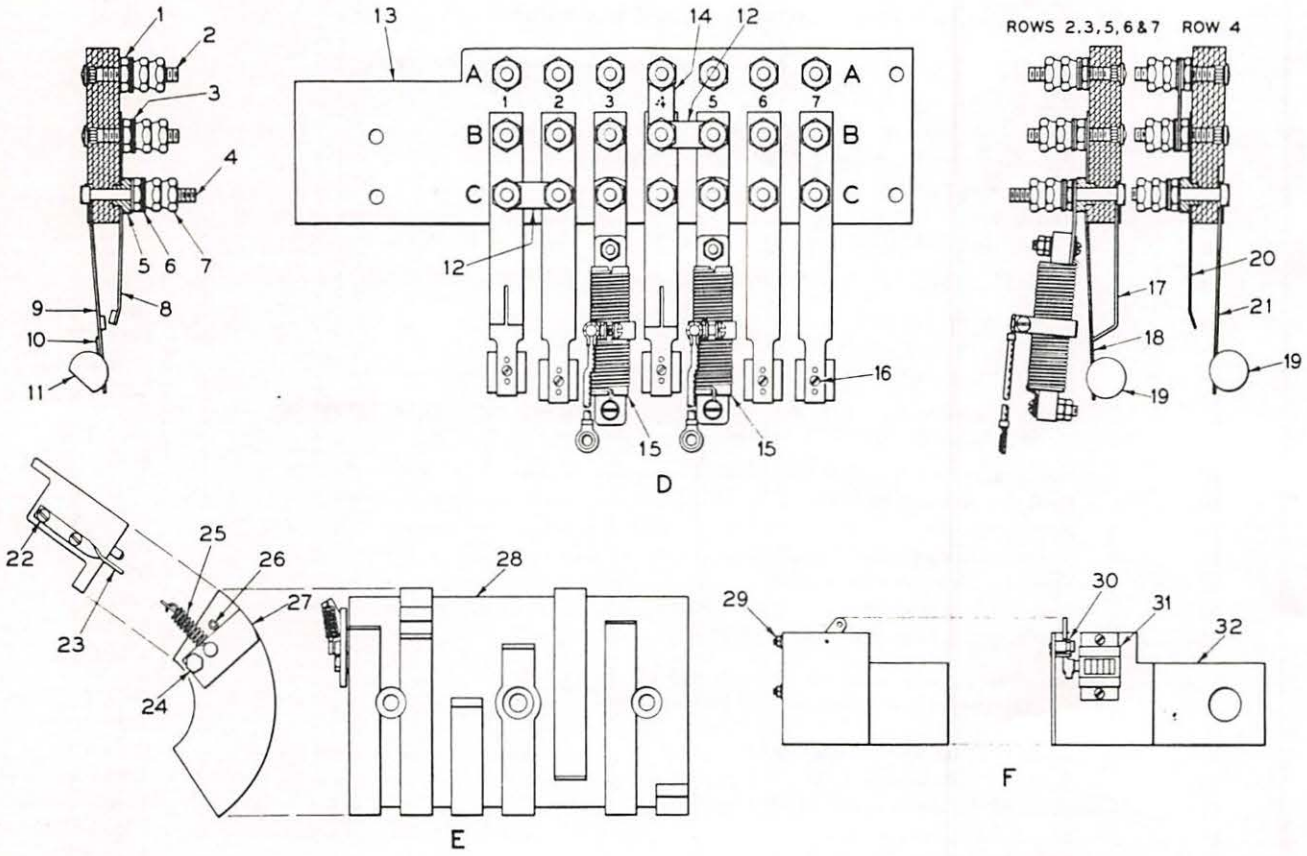

No. 3567, Type "D" Crossing Gate Mechanism

CIRCUIT CONTROLLER

Ref. No.	Description	Piece No.
D	Contact Block Complete	43119-8 Gr. 1
E	Commutator Complete, for 0°—90° operation	23447 Gr. 1
E1	Commutator Complete, for 0°—75° operation	23447 Gr. 2
F	Counter Complete	38408-1 Gr. 1
1	Nut, No. 14-24, hex., for terminal posts	10707W
2	Screw, No. 14-24, terminal post	372-4
3	Lock Washer, for nuts	53029-40
4	Screw, No. 14-24 x 2⅛", sq. hd., terminal post	350-8
5	Bushing, Insulating	6347-66
6	Washer, for terminal posts	10708W
7	Nut, No. 14-24, hex., for terminal posts	10706W
8	Spring, contact	32239-16 Gr. 1
9	Finger Complete	51195-19 Gr. 1
10	Stiffener, for finger Ref. 9	45723-4
11	Lifter, for contact, one required	23436-1
12	Connector, 1" centers	4906-20
13	Block, only	47508-204
14	Connector, 1⅛" centers	4906-21
15	Resistance Unit, 2.25 Ohms, two required	55945-6 Gr. 1
16	Screw, for fastening lifters to contact springs	54392-1
17	Spring, contact, five required	45723-3
18	Spring, contact, five required	45724-3
19	Lifter, for contacts, six required	23436
20	Spring, contact	45723-2
21	Spring, contact	45724-4
22	Screw, No. 6-32 x ¼", rd. hd., with lock washer, for bracket	2613-1 53029-1
23	Bracket, for spring	34418-159
24	Screw, No. 6-32 x ⅝", hex. hd., with elastic stop nut, for dog	4811-67 42333-19
25	Spring, for dog	1581-46
26	Pin, roll, 3/16" x ⅝", stop for dog	17188-1
27	Dog, only	23448 Gr. 1
28	Commutator, only, 0°—90° operation	28342-48
28A	Commutator, only, 0°—75° operation	28342-49
29	Screw, No. 4-40 x 5/16" rd. hd., with hex. nut and lock washer, for mounting counter	55225-7 12680-16 53029-6
30	Spring, for counter	1581-48
31	Counter, only	20567
32	Bracket, for mounting counter	55478-35 Gr. 1

No. 3567, Type "D" Crossing Gate Mechanism

MOTOR AND HOLD-CLEAR

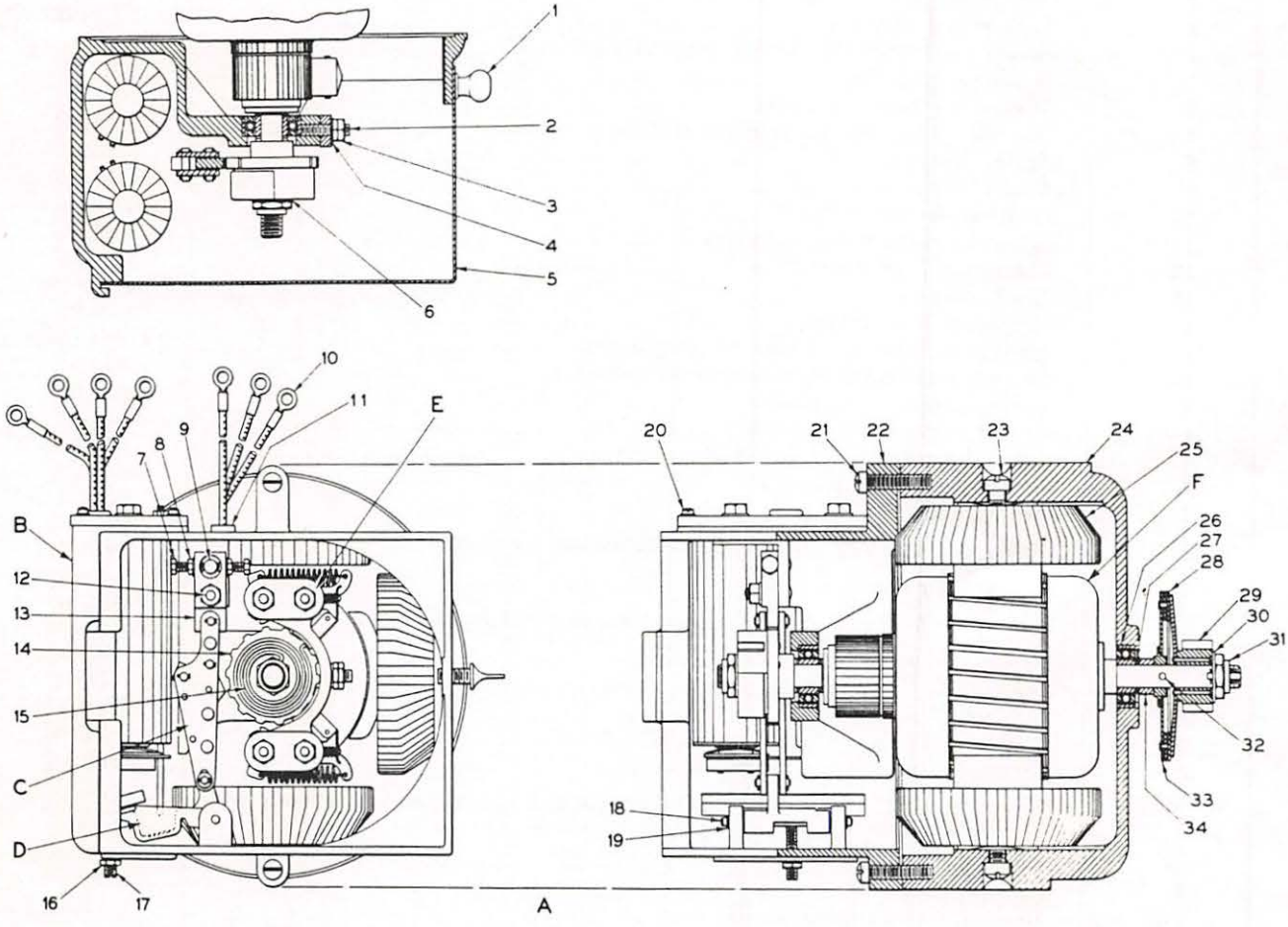

No. 3567, Type "D" Crossing Gate Mechanism

MOTOR AND HOLD-CLEAR

Ref. No.	Description	Piece No.
A	Motor Complete, with hold-clear assembly, 12-20 volts, D.C.	29890-12 Gr. 1
B	Hold-Clear Magnet Complete, For details and ordering references see Page 3-151, Ref. C.	49025-4 Gr. 1
C	Link Complete, For details and ordering references see Page 3-151, Ref. D.	32666-3 Gr. 2
D	Hold-Clear Armature Complete, For details and ordering references see Page 3-151, Ref. B	49021-2 Gr. 3
E	Brush Holder Complete, For details and ordering references see Page 3-151, Ref. A	37930-1 Gr. 11
F	Armature Complete, for motor	29893-1 Gr. 7
1	Screw, thumb, 5/16"-18, for cover	3092-8
2	Stud, for brush holder	50613-1
3	Nut, No. 14-24, hex., for stud Ref. 2	46989-2
4	Washer, for stud Ref. 2	10708W
5	Cover, for motor	57653-5
6	Bushing, for end of shaft	21499
7	Screw, No. 10-32, hex. hd., for fastening hanger block to stud Ref. 9	13006-16
8	Nut, No. 10-32, hex., with lock washer, for screw Ref. 7	577-8 53029-7
9	Stud, for fastening hanger block to bearing bracket	441-450
10	Terminal, Amp, for leads	59825-31
11	Bushing, for wires	27371
12	Stud, 1/4"-28, with hex. nut and lock washer, for mounting hanger block	9065-6 1472-4 0510-1
13	Block, hanger, for link Ref. C	32686-3
14	Disc Complete, hold-clear, for retaining mechanism	56786-3 Gr. 1
15	Spring, for hold-clear disc	34956-7
16	Nut, 1/4"-28, hex., with lock washer, for screw Ref. 17	1472-4 0510-1
17	Screw, 1/4"-28 x 1 9/16", headless, for hold-clear armature	18140-5
18	Shaft, for armature support	32758-1
19	Retaining Ring, for shaft	5713-71
20	Screw, No. 8-32 x 1/2", fil. hd., with lock washer, for mounting hold-clear magnet	55160-13 53029-4
21	Screw, 5/16"-18 x 1 1/4", fil. hd., for fastening bearing bracket to frame	50499
22	Bracket, bearing, only, for motor	32661-9
23	Screw, 3/8"-16 x 1", fil. hd., for mounting pole pieces and coils	19866
24	Frame, only, for motor	29825-7
25	Field Coil Complete, single winding, with pole piece	29999-9 Gr. 1
26	Bearing, ball, for each end of armature	49536-90
27	Washer, shim	34254
28	Disc Complete, with eight studs riveted in place	56786-2 Gr. 1
29	Pinion Complete, with spring riveted in place	31336 Gr. 4
30	Washer, lock, key type, for nut	28343-3
31	Nut, elastic stop, for ends of armature shaft	42333-29
32	Pin, 7/32" x 37/64", for shaft	500-33
33	Disc Complete, with friction disc riveted in place	56786-1 Gr. 3
34	Spacer, for shaft	38165-79

No. 3567, Type "D" Crossing Gate Mechanism

MOTOR AND HOLD-CLEAR DETAILS

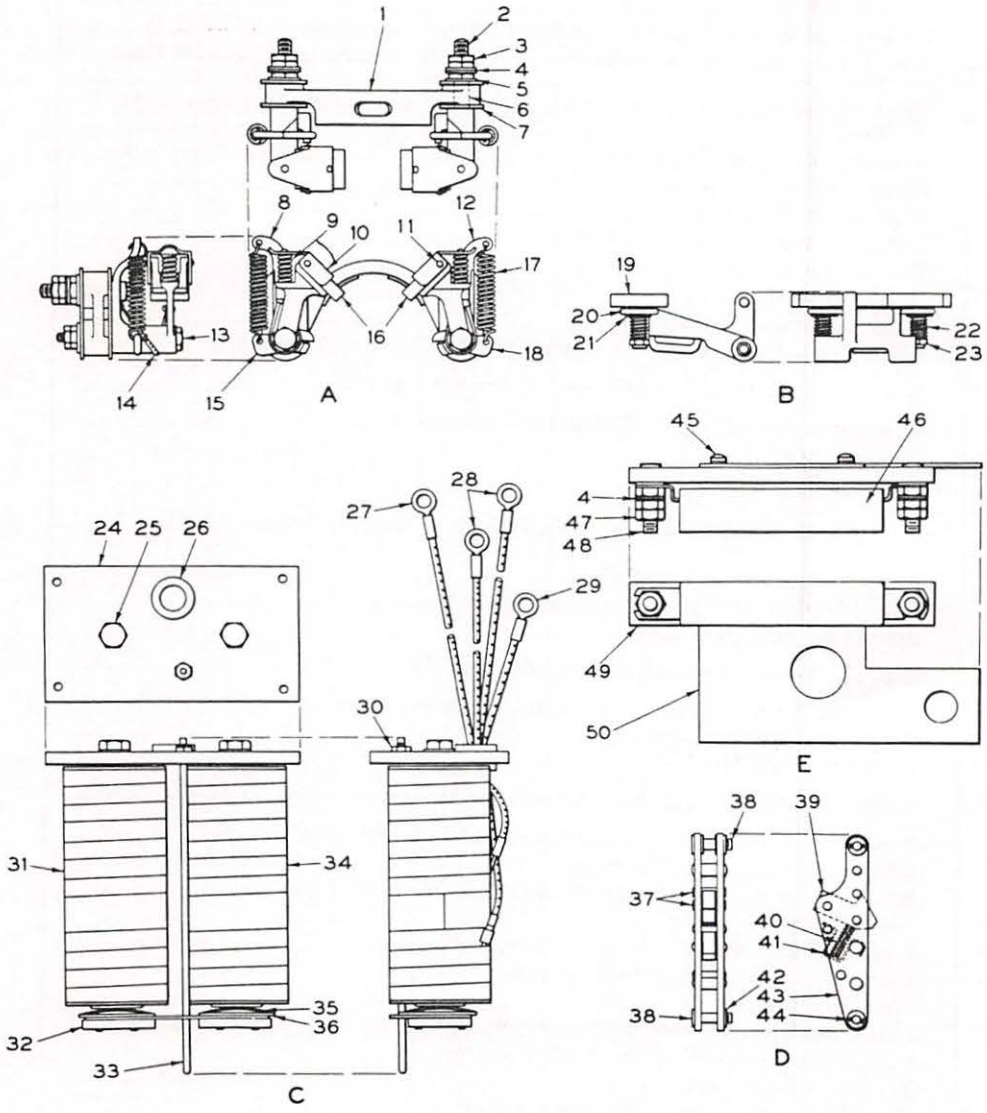

No. 3567, Type "D" Crossing Gate Mechanism

MOTOR AND HOLD-CLEAR DETAILS

Ref. No.	Description	Piece No.
A	Brush Holder Complete	37930-1 Gr. 11
B	Hold-Clear Armature Complete	49021-2 Gr. 3
C	Hold-Clear Magnet Complete	49025-4 Gr. 1
D	Link Complete	32666-3 Gr. 2
E	Heater Complete, 25 watts, 120 volts, with all parts for mounting	56090-28 Gr. 1
1	Bracket, for brush holder	37937-1
2	Screw, No. 14-24 x 1¾", sq. hd., for brush holder	350-5
3	Nut, No. 14-24, for terminal posts	42839-8
4	Washer, for terminal posts	10708W
5	Washer, for terminal posts	14682
6	Bushing, for screws Ref. 2 and 13	37976-3
7	Link, for brush holder	35505-54
8	Arm, lower	37931
9	Spring, for brush holder	37974
10	Cap Complete, with stud for spring	50808 Gr. 1
11	Pin, for fastening cap to lever	18142
12	Arm, upper	37932
13	Screw, No. 14-24, for brush holder	37939-1
14	Connector, with stud, for fastening to arm	42760-4 Gr. 1 56339-1
15	Lever, lower	37933
16	Brush, only	37938-18
17	Spring, for arms	47985
18	Lever, upper	37934
19	Armature Complete, with studs for springs	49020-5 Gr. 1
20	Armature Support Complete	33249-1 Gr. 2
21	Eyelet, for spring	41858
22	Spring, for armature support	586-10
23	Nut, elastic stop, No. 10-32, hex., for studs on armature	42333-8
24	Yoke, only	48844-4
25	Screw, 5/16"-24 x 7/8", hex. hd., with lock washer, for fastening cores to yoke	3440-20 53029-5
26	Grommet, for leads	55243-26
27	Connector, red	42760-223 Gr. 2
28	Connector, black	42760-223 Gr. 1
29	Connector, yellow	42760-223 Gr. 3
30	Nut, 1/8"-56, hex., for rod	12680-5
31	Coil, pickup, 60 ohms	50625-2 Gr. 1
32	Core Complete	49022-4 Gr. 1
33	Rod, adjusting	29467-10
34	Coil, holding, 350 ohms	50626-2 Gr. 1
35	Washer, spring, to keep coils tight	1225-105
36	Washer, fibre	17546-1
37	Pin, roll, for link, two required	17188-1
38	Pin, for link	1118-42
39	Dog, only, for link	43650-10
40	Spring, for dog	586-199
41	Clip, for spring Ref. 40	30645-12
42	Washer, for pins Ref. 38	42312-1
43	Link Complete, with spacers and pins	32659-3 Gr. 1
44	Pin, cotter, for pins Ref. 38	0652
45	Screw, No. 10-32 x 3/8" fil. hd., with lock washer, for fastening block to plate	12563-22 53029-3
46	Resistor, only, 25 watts, 120 volts	55291-4
47	Nut, No. 14-24, hex., for terminal posts	10707W
48	Screw, No. 14-24 x 1¼", sq. hd., used as terminal post	350-1
49	Block, for resistor	50086-7
50	Plate, mounting	33684-1

TYPE 3568 CROSSING GATE MECHANISM
POWER-UP POWER-DOWN OPERATION
REPLACEMENT PARTS
MANUFACTURER DISCONTINUED 1976

CONTENTS

Mechanism and General Parts	3-157 to 3-159
Motor and Slot and Slot Detail Parts	3-160 & 3-161
Motor Detail Parts	3-162 & 3-163
Circuit Controler Detail Parts	3-164 & 3-165

WESTERN-CULLEN-HAYES, Inc.
2700 West 36th Place • Chicago, Illinois 60632 • Telephone: 312/254-9600 • Telex 25-3206

Type 3568 Crossing Gate Mechanism

POWER-UP AND POWER-DOWN OPERATION

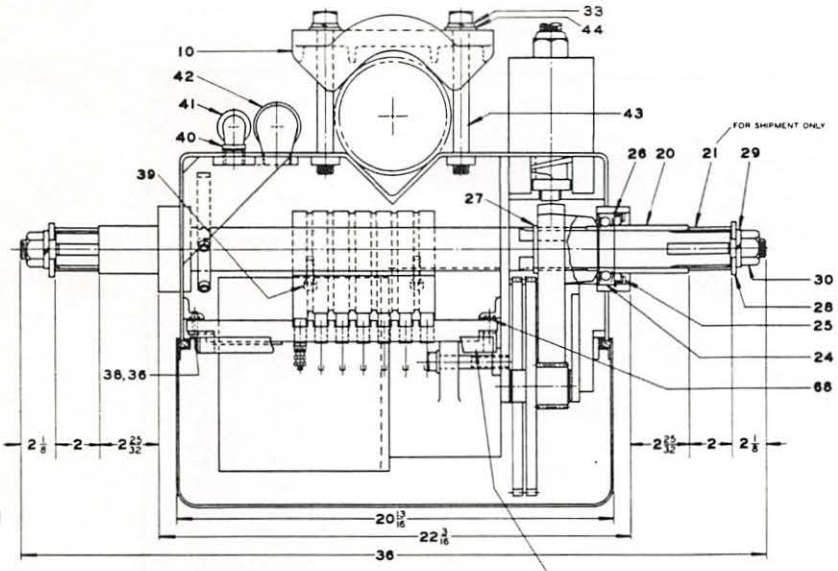

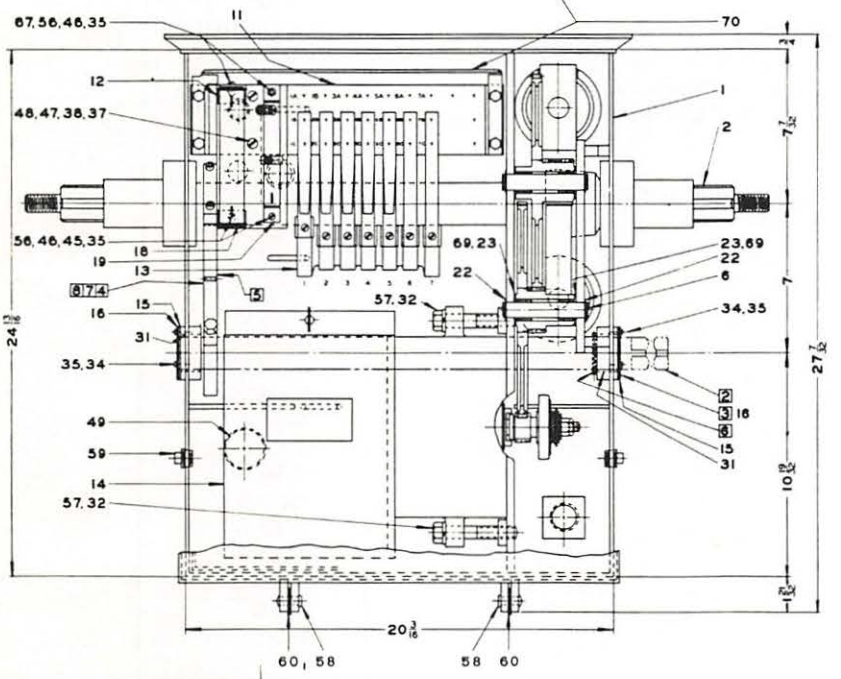

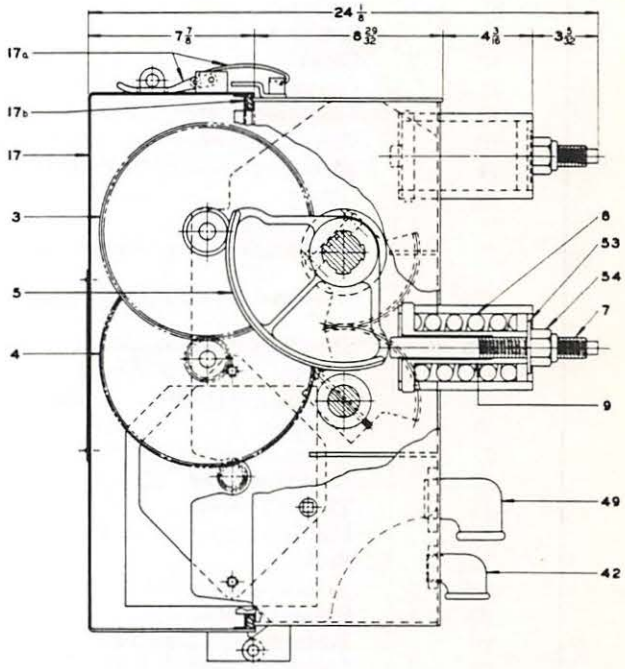

REPLACEMENT PARTS LIST BEGINS ON NEXT PAGE.

Type 3568 Crossing Gate Mechanism

POWER-UP AND POWER-DOWN OPERATION

Ref. No.	Description	Piece No.
M	Type 3568 Crossing Gate Mechanism Complete, for Roadway Arm only (without sidewalk Arm Shaft), 12-20 Volt D.C. Motor, 90° Operation, Power-Up and Power-Down, for mounting on 5" Pipe Post	3568-131
A2	Sidewalk Arm Kit Complete, (for installation in Mechanism when sidewalk arm is used) includes Ref. 2 to 8 (See Page 3-159 for details)	3568-140C
	REPLACEMENT PARTS	
1	Mechanism Case	451011-0101
2	Roadway Arm Shaft	451011-1102
3	Gear and Pinion with Needle Bearing and Seal	451011-0801
3a	Needle Bearing only for Ref. 3 and Ref. 4	66194
4	Gear and Pinion with Needle Bearing and Seal	451011-0901
5	Gear Segment	451011-1001
6	Gear Shaft	451011-2901
7	Spring-Stop Bolt	451011-2801
8	Spring	68808
9	Spring Stop	451011-2601
10	Clamp	213238
11	Circuit Controller Complete, for Details See Page 3-165	451011-1601
12	Mounting Plate	451011-3001
13	Circuit Controller Cam Complete, for Details see Page 3-165	399530
14	Motor and Slot, 12-20 Volts D.C. for Details see Pages 3-160 to 3-163	451011-2401
15	Gasket	451011-3101
16	Cover Plate	451011-3202
17	Mechanism Cover Complete with Hasp, Link, Staple and Gasket	451011-0602
17a	Hasp and Link Assembly	451011-3601 451011-3701 43396
17b	Sponge Rubber Gasket	750069
18	Limit Resistor, 0.4 ohm	720261
19	Snubbing Resistor, 1.25 ohms	720262
20	Sleeve	451011-3301
21	Spline Protector, (used for shipping only)	213506
22	Retaining Ring	790835
23	Thrust Bearing	792216
24	Ball Bearing	66384
25	Seal	792215
26	Retaining Ring	792214
27	Retaining Ring	79768
28	Washer, 1¼", Cad. Pl.	47510
29	Lockwasher, 1¼", Cad. Pl.	47805
30	Nut, 1¼"-7, Hex. Stl., Cad. Pl.	48176

Type 3568 Crossing Gate Mechanism

REPLACEMENT PARTS

(continued)

Ref. No.	Description	Piece No.
31	Oilite Bearing	792208
32	Cap Screw, 5/8"-11 x 3½" lg. Hex., Cad. Pl.	
33	Lockwasher, ¾", Stl., Cad. Pl.	
34	Screw, No. 10-32 x ½" lg. Rd. Hd., Tin Pl.	
35	Lockwasher, No. 10, Tin Pl.	
36	Cap Screw, ¼"-20 x 1" lg., Tin Pl.	
37	Washer, ¼" Stl., Tin Pl.	
38	Lockwsher, ¼" Stl., Tin Pl.	
39	Cap Screw, ⅜"-16 x 2" lg., Socket Head, Cad. Pl.	
40	Pipe Reducer Bushing ¾" to ½", Galv.	
41	Cable Grip, 45°, for 0.375 to 0.500 Cable dia	DB945A
42	Ventilator	185702
43	Bolt, Sq. Hd., ¾"-10 x 8" lg., Galv.	
44	Washer, Plain Stl. ¾", Cad. Pl.	
45	Screw, No. 10 - 32 x 7/16" lg., Rd. Hd., Tin Pl.	
46	Nut, No. 10-32, Hex., Stl., Tin Pl.	
47	Nut, ¼"-20, Hex. Stl., Tin Pl.	
48	Screw, ¼"-20 x 1¾" lg., Rd. Hd.	
49	Street Elbow, 1½", 90°, Galv.	
53	Washer, Plain Stl., 1", Cad. Pl.	
54	Elastic Stop Nut, 1"-8, Cad. Pl.	
56	Washer, Plain Stl. No. 10, Tin Pl.	
57	Lockwasher, 5/8", Stl. Cad. Pl.	
58	Hinge Pin	451011-4902
59	Pipe Plug, ½", Galv.	
60	Shim Washer	47502
67	Screw, No. 10-32 x 7/16" lg., Fl. Hd. Stl., Tin Pl.	521038
68	Spacer	451011-0511
69	Washer, Bronze	433894
70	Wire Support	451011-6101
	SIDEWALK ARM KIT, COMPONENTS	
2	Sidewalk Arm Shaft	451011-1101
3	Gasket Retainer	451011-3201
4	Gear Complete, for Sidewalk Shaft	451011-1203
5	Gear Complete, for Roadway Shaft	451011-1202
6	Roll Pin	487024
7	Cap Screw, ⅜"-16 x 3½" lg., Hex. Hd., Cad. Pl.	
8	Lockwasher, ⅜", Stl. Tin Pl.	

Type 3568 Crossing Gate Mechanism

MOTOR AND SLOT

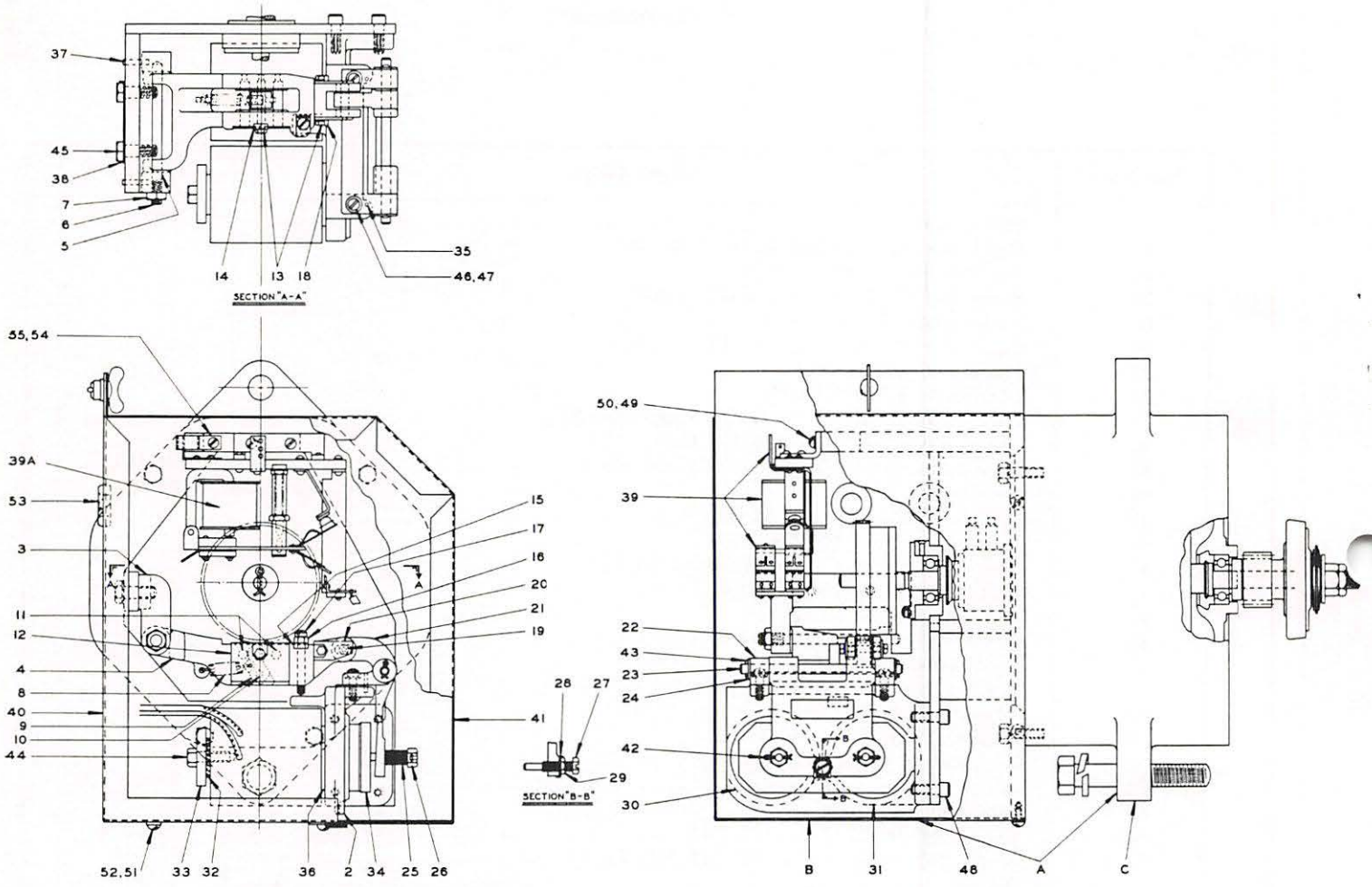

Ref. No.	Description	Piece No.
A	Motor and Slot Sub-Assembly Complete, 12-20 Volts D.C.	451011-2401
B	Slot only, Complete without Snubbing Relay, cover and motor end bell, for Details see Page 3-161	451011-2403
C	Motor only, Complete, for Details see Pages 3-162 and 3-163	451011-4201

Type 3568 Crossing Gate Mechanism

SLOT REPLACEMENT PARTS

Ref. No.	Description	Piece No.
2	Core Assembly	451011-2701
3	Adjusting Bracket	106736
4	Locking Arm	106608
5	Bearing Pin	213780
6	Screw, only	106637
7	Lock Nut	17057
8	Return Spring	106666
9	Locking Pawl	106607
10	Bearing Pin	212649
11	Stop Pin	213779
12	Plate	106497
13	Screw	213786
14	Bolt Lock	164005
15	Bolt Lock	163639
16	Nut	52727
17	Screw	231691
18	Bolt Lock	213785
19	Bearing Pin	213781
20	Plate	106574
21	Armature Bar	106495
22	Armature Bracket	291802
23	Bearing Pin with Two Washers Ref. 24 and Two 1/16" x 1/2" Cotters	
23a	Bearing Pin only	106470
24	Washer	47818
25	Coil Spring	106682
26	Nut	106636
27	Adjusting Screw, Ref. 27a with Nut Lock Ref. 28 and Nut Ref. 29	
27a	Adjusting Screw only	105554
28	Nut Lock	23616
29	Nut	1509
30	Pick-Up Coil, 60 ohms	225014
31	Holding Coil, 340 ohms	225015
32	Coil Lock	213787
33	Back Strap	106529
34	Armature Complete	106503
35	Dowel Pin	176319
36	Cork Washer	170801
37	Dowel Pin	168249
38	Bolt Lock	18982
39	Snubbing and Control Relay, Complete	451011-4501
39a	Coil only for above Relay	289055
40	Back Cover	451011-3903
41	Front Cover	451011-4003
42	Cotter Pin, 1/16" x 5/8" lg., Stl., Tin Pl.	
43	Cotter Pin, 1/16" x 1/2" lg., Stl., Tin Pl.	
44	Cap Screw, 1/4"-20 x 5/8" lg., Hex. Hd., Stl., Tin Pl.	
45	Cap Screw, 5/16"-18 x 3/4" lg., Hex Hd., Stl., Cad. Pl.	
46	Screw, No. 10-32 x 5/8" lg., il. Hd., Stl., Tin Pl.	
47	Lock Washer, No. 12, Stl., Tin Pl.	
48	Screw, Socket Hd.	50213
49	Screw, No. 8-36 x 3/16" lg., Rd. Hd. Stl., Tin Pl.	
50	Lockwasher, No. 8, Stl., Tin Pl.	
51	Screw, No. 10-32 x 3/8" lg., Rd. Hd. Stl., Tin Pl.	
52	Lockwasher, 7/8" Stl., Tin Pl.	
53	Grommet	75495
54	Clamp	700588
55	Screw, No. 10-32 x 3/8", Rd. Hd. Stl., Tin Pl.	

Type 3568 Crossing Gate Mechanism

MOTOR REPLACEMENT PARTS

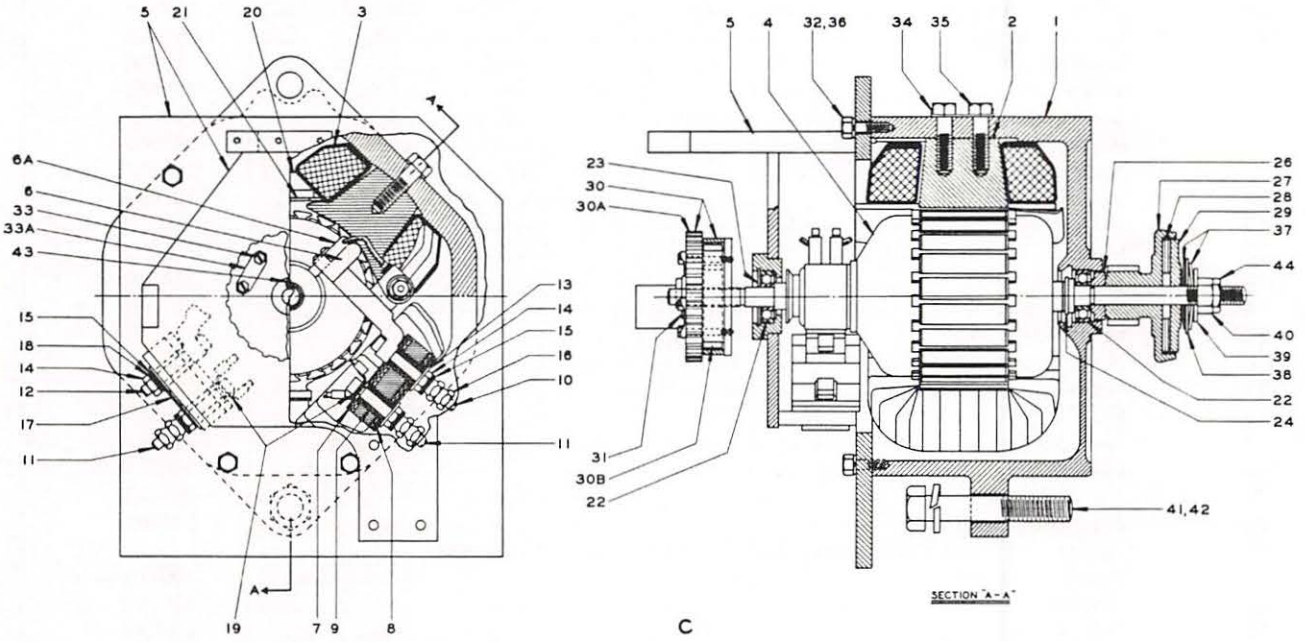

Ref. No.	Description	Piece No.
C	Motor, Complete, 12-20 Volts D.C.	451011-4201
	REPLACEMENT PARTS	
1	Motor Frame	432286
2	Pole	43562
3	Field Coil Assembly	399520
4	Armature	451011-4301
5	Front Head	451011-2102
6	Brush Holder Complete with 2 Brushes	246735
6a	Motor Brush complete with pig-tail	295007

Grounds in your GATE LIGHTS?

TRY THE GATE LIGHT WITH A DIFFERENCE

- Box is rugged, HEAVY wall non-conductive glass-fiber-reinforced plastic.
- Anti-turn flange holds light head in place.
- Three types available.
- Prompt shipments from stock.

If you use aluminum or aluminum/fiberglass gate arms you need these lights.

Call or write for W-C-H Bulletin 3-501

WC Hayes

WESTERN-CULLEN-HAYES, Inc.
2700 West 36th place • Chicago, IL 60632-1682
Telephone 1 312/254-9600 • Telex 25-3206

Railroad last year, the training center features classrooms and "hands-on" laboratories for track foremen, signalmen, crane operators and roadway equipment mechanics.

The building has been completely remodeled to create an attractive environment for learning and accommodate space requirements for classrooms and training equipment.

For signalmen, the new center has a room equipped with railroad signaling hardware, including Centralized Traffic Control (CTC) equipment, electric switches and hot box detectors.

A.F. "Sonny" Graham, supervisor-signalman training, and Doug Crabtree, senior training officer, use the facility to conduct the four levels of signalman training required by the Signal Department.

Every two weeks a new group of assistant signalmen comes to North Little Rock to complete the various phases of signal training.

On the day visited finishing touches were still being put on the building and surrounding grounds. With the smell of fresh paint still in the air, assistant signalmen were busy with their studies. The group is split into two groups, one instructed by A.F. Graham and the other by Doug Crabtree.

General Chairman Corn and Grand Lodge Representative J.L. Barton were given an opportunity to address both groups. The variety of topics was very broad. TSJ wishes to thank Mr. Graham and Mr. Crabtree for allowing the

Type 3568 Crossing Gate Mechanism

MOTOR REPLACEMENT PARTS

Ref. No.	Description	Piece No.
7	Insulation	451011-4101
8	Insulation	451011-4102
9	Insulating Tubing	451011-3302
10	Binding Post	112417
11	Binding Post	130200
12	Binding Post	160475
13	Washer	43550
14	Clamp Nut	10707
15	Chamfered Washer	10708
16	Binding Nut	10706
17	Connector	120343
18	Lock Washer	47792
19	Lock Washer	188259
20	Insulation	125486
21	Spring	125487
22	Ball Bearing	66385
23	Retaining Ring	792269
24	Oil Ring	44882
26	Spacer	451011-4402
27	Motor Pinion	451011-4401
28	Friction Disc	146650
29	Clutch Plate	451011-4403
30	Flexible Coupling Complete with Ratchet Gear	106634
30a	Ratchet Gear Only	106565
30b	Rubber Shock Absorber	107201
31	Washer	213133
32	Bolt	139346
33	Slotted Hex. Hd. Screw	219237
33A	Plate Lockwasher	219236
34	Plate Lockwasher	44603
35	Cap Screw, 3/8"-16 x 1 1/8" Hex. Hd. Stl., Cad. Pl.	
36	Lockwasher	47775
37	Spring Washer	299519
38	Washer	178876-001
39	Washer	47639
40	Hex. Nut	48095
41	Cap Screw 5/8"-11 x 3 1/2" lg., Cad. Pl.	
42	Lockwasher, 5/8" Stl., Cad. Pl.	
43	Cotter Pin, 1/8" x 5/8" lg., Stl., Tin Pl.	
44	Jam Nut	22063

Type 3568 Crossing Gate Mechanism

CIRCUIT CONTROLLER AND CAM

REPLACEMENT PARTS

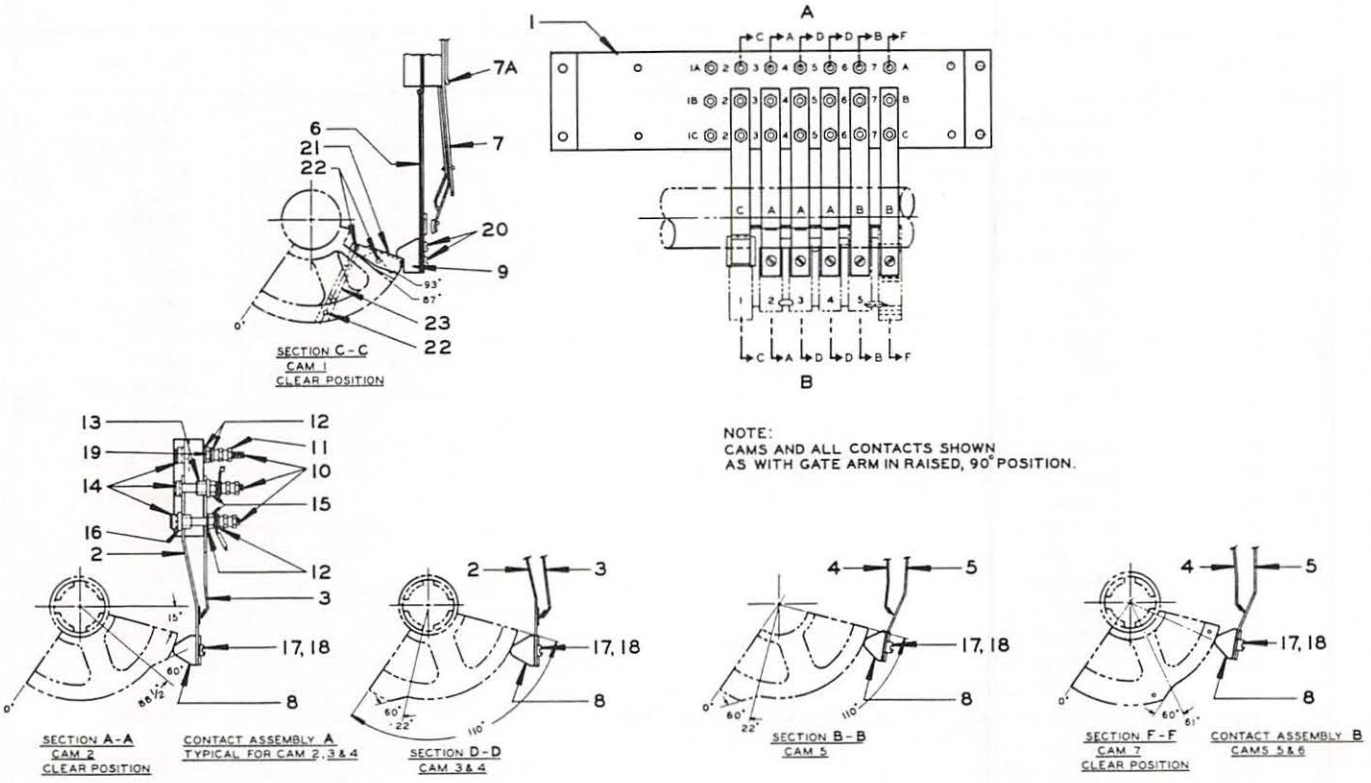

Ref. No.	Description	Piece No.
A	Circuit Controller Complete with 7 Contacts and All Binding Posts	451011-1601
B	Standard Cam, for 90° operation, complete (with Rocker Arm and Spring for Motor Control Contact)	399530

Type 3568 Crossing Gate Mechanism

CIRCUIT CONTROLLER

REPLACEMENT PARTS

Ref. No.	Description	Piece No.
1	Terminal Board only	451011-5601
2	Contact Spring, without Cam Follower, for Spaces 2, 3, 4 and 5	451011-1501
3	Contact Spring, for Spaces 2, 3, 4 and 5	451011-1503
4	Contact Spring, for Spaces 6 and 7	451011-1505
5	Contact Spring, without Cam Follower, for Spaces 6 and 7	451011-1507
6	Motor Control Contact Spring, without Cam Follower, for Space 1	451011-1509
7	Motor Control Contact Spring Assembly, for Space 1	451011-6301
7a	Reinforcing Plate, for above	451011-6306
8	Standard Cam Follower	213089
9	Cam Follower for Motor Control Contact, for Space 1	451011-1701
10	Binding Post	130200
11	Binding Nut	10706
12	Chamfered Washer	10708
13	Insulating Bushing	451011-3401
14	Lockwasher	451011-3501
15	Nut	031670
16	Insulating Washer	451011-3402
17	Fillister Head Screw, for Cam Followers—Spaces 2 to 7	052301
18	Clamp Nut	047669
19	Lockwasher	10707
20	Fillister Head Screw, for Cam Follower—Space 1	522047
21	Rocker Arm only	451011-1801
22	Roll Pin	487025
23	Coil Spring	451011-1901
31	Heater Assembly Complete with Leads and All Mounting Screws	45010-0104
32	Resistor, with Leads, only	296576
33	Counter Assembly Complete with Bracket, Actuating Arm and All Mounting Screws	45010-0103

TYPE 3570 CROSSING GATE MECHANISM AND REPLACEMENT PARTS POWER-UP AND POWER-DOWN OPERATION

CONTENTS

	Page No.
Mechanism and General Parts	3-203 to 3-205
Circuit Controller and Detail Parts	3-206 & 3-207
Motor and Detail Parts	3-208

WC Hayes

WESTERN-CULLEN-HAYES, Inc.

2700 West 36th Place • Chicago, Illinois 60632 • Telephone: 312/254-9600 • Telex 25-3206

1969

Type 3570 Crossing Gate Mechanism

POWER-UP AND POWER-DOWN OPERATION

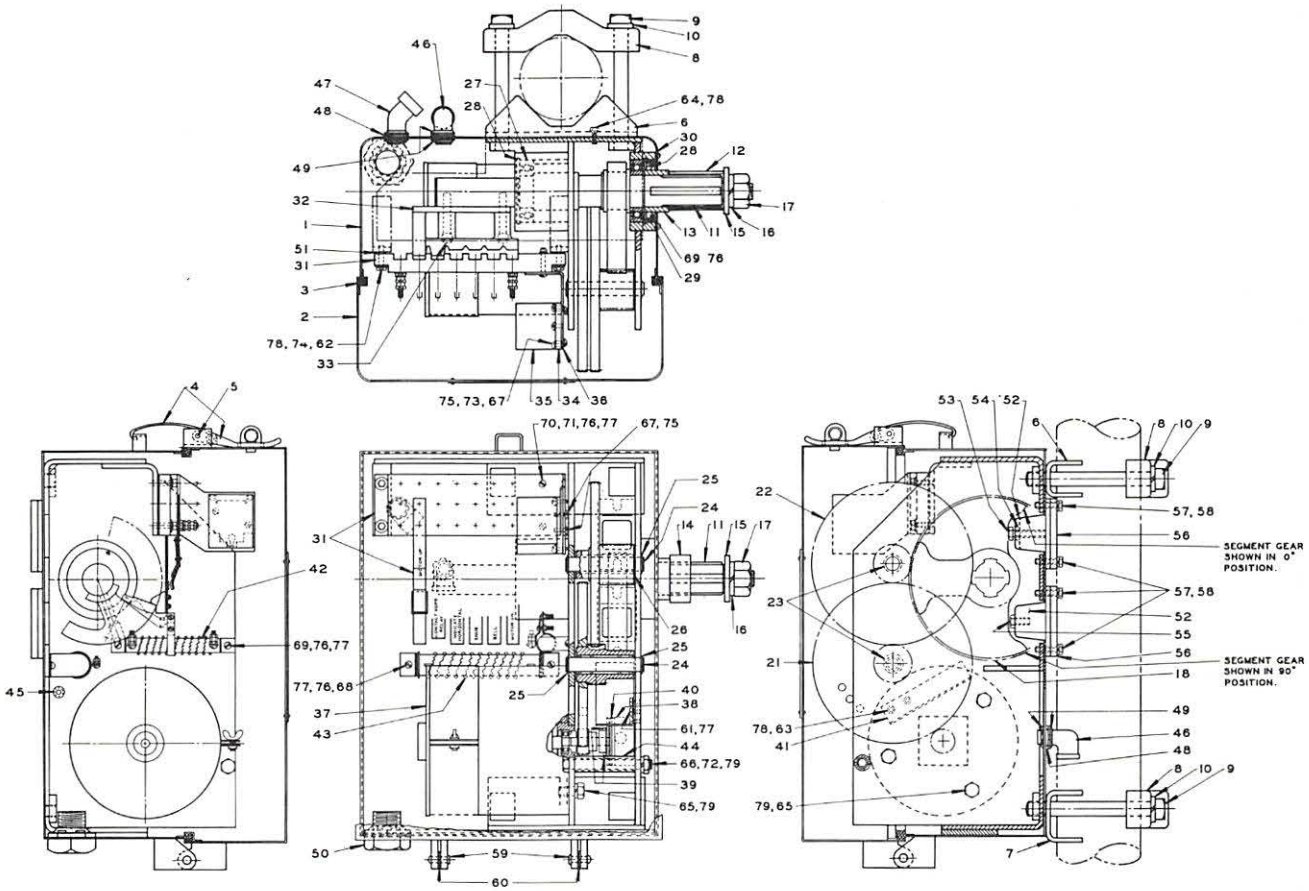

ORDERING REFERENCE AND REPLACEMENT PARTS LIST BEGINS ON NEXT PAGE

Type 3570 Crossing Gate Mechanism

POWER-UP AND POWER-DOWN OPERATION

Ref. No.	Description	Piece No.
M	Type 3570 Crossing Gate Mechanism, 12-20 Volt Motor, 90° Operation, Power-up and Power-down, for mounting on 4" I.D. Pipe Post	3570-131
	REPLACEMENT PARTS	
1	Mechanism Case, only	451071-1101
2	Mechanism Cover, with gasket, hasp, link and staple	451071-3602
3	Gasket, only, (shipped in one piece, 6'-05/8" long)	750028
4	Hasp and Link Assembly	451011-3603
5	Hinge Pin, for Hasp	138443
6	Upper Clamp, for 4" I.D. pipe mounting	451071-0801
7	Bottom Clamp, for 4" I.D. pipe mounting	451071-4701
8	Clamp, for 4" I.D. pipe mounting	433619
9	Bolt, Sq. Hd., Stl., ¾"-10x7½" lg., Cad. Pl.	
10	Lock Washer, Stl., ¾", Cad. Pl.	
11	Gate Arm Shaft	451071-2101
12	Spline Protector (used for shipping only)	451071-2703
13	Sleeve	451071-0703
14	Spacer Collar	3570-150
15	Washer, Pl. Stl., ⅞", Cad. Pl.	
16	Lock Washer, Stl., ⅞", Cad. Pl.	
17	Nut, Hex., Stl., ⅞"-9, Cad. Pl.	
18	Segment Gear	451071-1601
19	Retaining Ring	079768
20	Spacer	451071-1701
21	Gear and Pinion Assembly with Needle Bearings	451071-1801
22	Gear and Pinion Assembly, with Needle Bearings	451071-1802
23	Needle Bearing, for above Gear and Pinion Assemblies	66194
24	Gear Shaft	451071-1703
25	Shaft Retaining Ring	790835
26	Oilite Thrust Bearing	792216
27	Ball Bearing	066384
28	Bearing Retaining Ring	792214
29	Bearing Seal	792215
30	Gasket	451071-3005
31	Circuit Controller Complete with 6 contacts and all binding posts, less relay and bracket, for details see Pages 3-206 and 3-207	451071-2501
32	Standard Cam, for 90° operation, for details see Page 3-206	451071-2401
33	Cap Screw, Socket Head, Stl., ⅜"-16x2" lg. Cad. Pl.	

Type 3570 Crossing Gate Mechanism

POWER-UP AND POWER-DOWN OPERATION

REPLACEMENT PARTS (Continued)

Ref. No.	Description	Piece No.
34	Motor Control and Snubbing Relay	726131
35	Relay Cover	726132
36	Relay Mounting Bracket	451071-5101
37	Motor Complete with Pinion. For details See Page 3-208	451071-3101
38	Electric Brake Hold Clear, Complete	705032
39	Armature Release Spring	680182
40	Replaceable Face, for Armature	
41	Shield	451071-2701
42	Adjustable Snubbing Resistor	720262
43	Limiting Resistor	720261
44	Spacer	451071-2702
45	Grommet	751118
46	Ventilator	070109
47	Cable Grip, for 0.375 to 0.500 Cable Dia.	DB945A
48	Gasket Assembly	470033
49	½" Conduit Locknut, Galv.	
50	Straight Watertight Connector	ST-150
51	Spacer	451011-0511
52	Elastomer Shock Absorber	751287
53	Stop Bolt	434761
54	Jam Nut, Hex. Stl., ⅜"-16, Cad. Pl.	
55	Cap Screw, Hex., Hd., Stl. ⅜"-16x¾ lg. Cad. Pl.	
56	Shock Absorber Retainer Plate	451071-3004
57	Cap Screw, Hex. Hd., Stl., 5/16"-18x1¼" lg. Cad. Pl.	
58	Lock Washer, Stl., 5/16", Cad. Pl.	
59	Cover Hinge Pin	451011-4902
60	Washer, Pl. Stl., ⅜", Cad. Pl.	
61	Cap Screw, Socket. Hd., Stl., No. 10-32x⅜" lg. Tin Pl.	
62	Cap Screw, Hex. Hd., Stl., ¼"-20x¼" lg. Tin Pl.	
63	Cap Screw, Hex. Hd., Stl., ¼"-20x⅜" lg. Tin Pl.	
64	Cap Screw, Hex. Hd., Stl., ¼"-20x¾" lg. Tin Pl.	
65	Cap Screw, Hex. Hd., Stl., ½"-13x1" lg. Cad. Pl.	
66	Cap Screw, Hex. Hd., Stl., ½"-13x4½" lg. Cad. Pl.	
67	Machine Screw, Rd. Hd., Stl., No. 8-32x⅝" lg. Tin Pl.	
68	Machine Screw, Rd. Hd., Stl., No. 10-32x¼" lg. Tin Pl.	
69	Machine Screw, Rd. Hd., Stl., No. 10-32x⅜" lg. Tin Pl.	
70	Machine Screw, Rd. Hd., Stl., No. 10-32x1½" lg Tin Pl.	
71	Nut, Hex., Stl., No. 10-32, Tin Pl.	
72	Jam Nut, Hex. Stl., ½"-13, Cad. Pl.	
73	Washer, Plain, Stl., No. 8, Tin Pl.	
74	Washer, Plain, Stl., ¼", Tin Pl.	
75	Lock Washer, Stl., No. 8, Tin Pl.	
76	Washer, Plain, Stl., No. 10, Tin Pl.	
77	Lock Washer, Stl., No. 10, Tin Pl.	
78	Lock Washer, Stl., ¼", Tin Pl.	
79	Lock Washer, Stl., ½", Cad. Pl.	

Type 3570 Crossing Gate Mechanism

CIRCUIT CONTROLLER AND CAM

REPLACEMENT PARTS

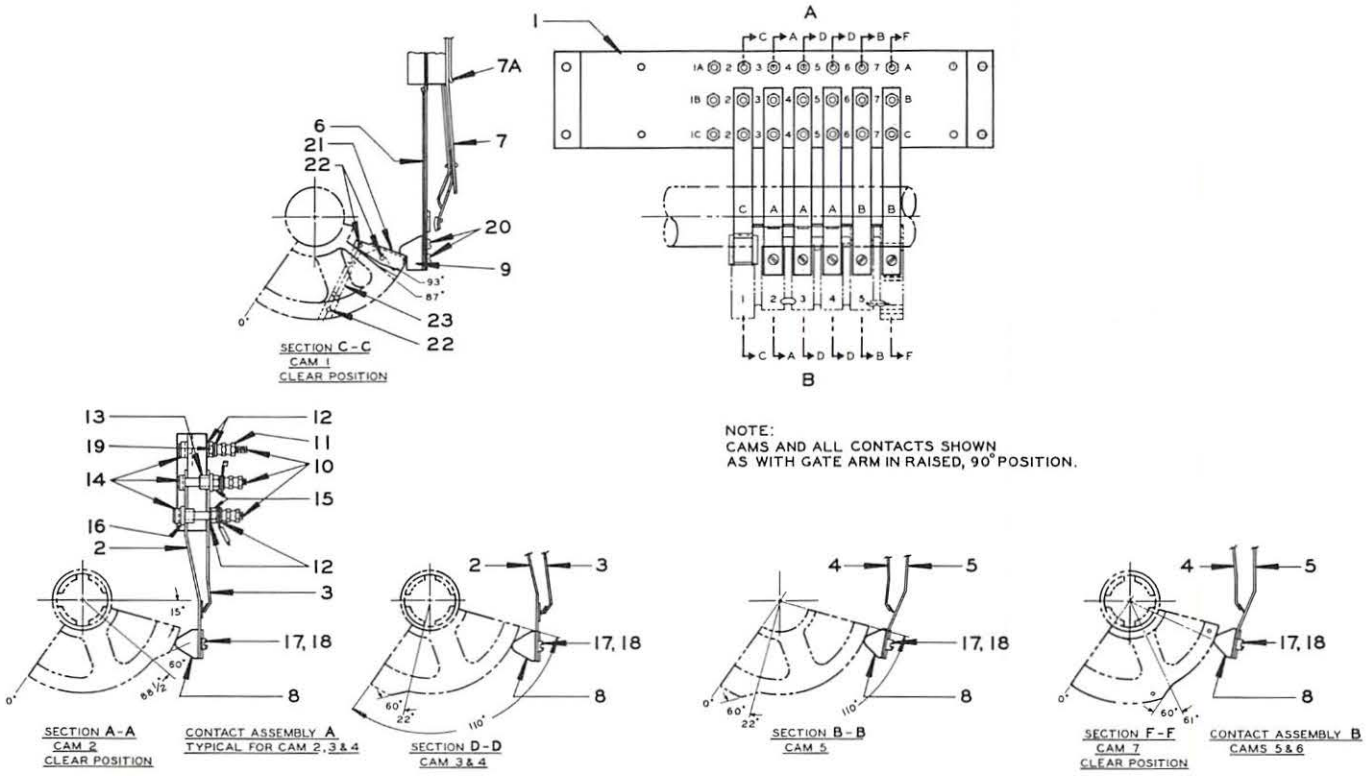

Ref. No.	Description	Piece No.
A	Circuit Controller Complete with 6 Contacts and All Binding Posts.....	451071-2501
B	Standard Cam, for 90° operation, complete (with Rocker Arm and Spring for Motor Control Contact)	451071-2401

Type 3570 Crossing Gate Mechanism

CIRCUIT CONTROLLER

REPLACEMENT PARTS

Ref. No.	Description	Piece No.
1	Terminal Board only	451071-2801
2	Contact Spring, without Cam Follower, for Spaces 3, 4 and 5, Cams 2, 3 and 4	451011-1501
3	Contact Spring, for Spaces 3, 4 and 5, Cams 2, 3 and 4	451011-1503
4	Contact Spring, for Spaces 6 and 7, Cams 5 and 6	451011-1505
5	Contact Spring, without Cam Follower, for Spaces 6 and 7, Cams 5 and 6	451011-1507
6	Motor Control Contact Spring, without Cam Follower, for Space 2, Cam 1	451011-1509
7	Motor Control Contact Spring Assembly, for Space 2, Cam 1	451011-6301
7a	Reinforcing Plate for above	451011-6306
8	Standard Cam Follower	213089
9	Cam Follower for Motor Control Contact, for Space 2, Cam 1	451011-1702
10	Binding Post	130200
11	Binding Nut	10706
12	Chamfered Washer	10708
13	Insulating Bushing	451011-3401
14	Lockwasher	451011-3501
15	Nut	31670
16	Insulating Washer	451011-3402
17	Fillister Head Screw, for Cam Followers—Spaces 3 to 7, Cams 2 to 6	52301
18	Lockwasher	47669
19	Clamp Nut	10707
20	Fillister Head Screw, for Cam Follower—Space 2, Cam 1	52255
21	Rocker Arm only	451011-1801
22	Roll Pin	487025
23	Coil Spring	451011-1901

Type 3570 Crossing Gate Mechanism

MOTOR REPLACEMENT PARTS

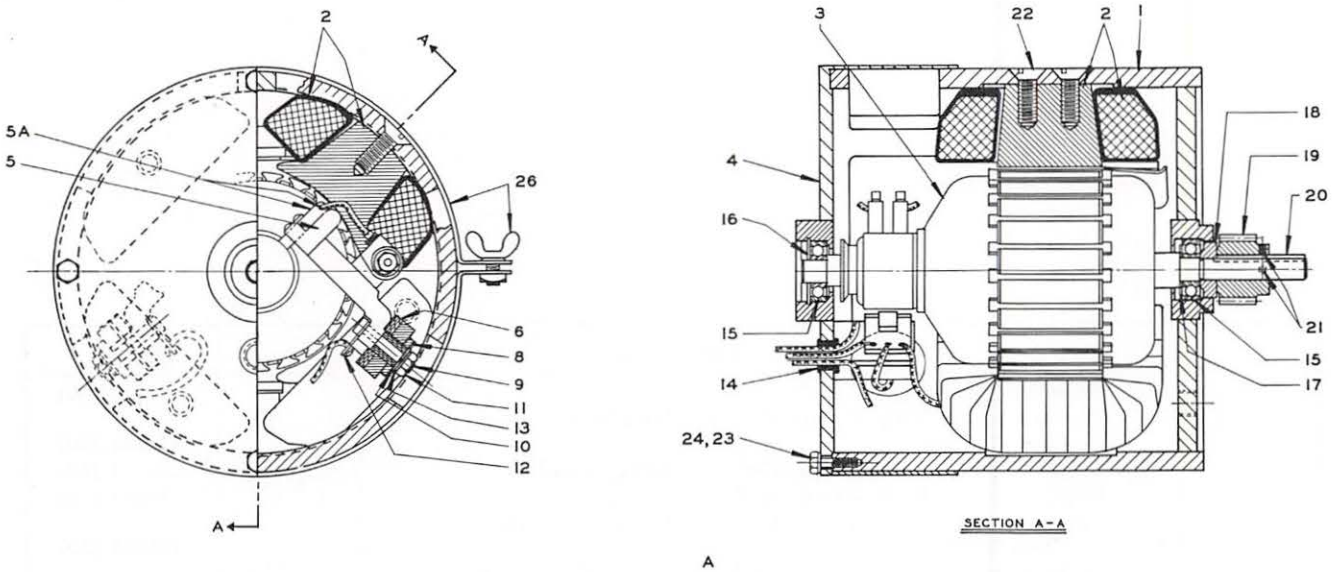

Ref. No.	Description	Piece No.
A	Motor Complete, with pinion, 12-20 Volts D. C.	451071-3101
	REPLACEMENT PARTS	
1	Motor Frame	451071-1901
2	Field Coil and Pole Assembly	433566
3	Motor Armature	451071-2301
4	Front Head	451071-1902
5	Brush Holder complete with 2 brushes	246735
5a	Motor Brush complete with pig-tail	295007
6	Insulation	451071-3001
8	Insulating Bushing	451071-3007
9	Binding Post	122489
10	Washer	47818
11	Hex. Nut	29103
12	Connector	451071-3002
13	Lockwasher	47792
14	Grommet	751149
15	Ball Bearing	66385
16	Retaining Ring	792269
17	Spacer Washer	302198
18	Spacer	451011-4402
19	Motor Pinion with set screws	451071-1806 50787
20	Key	451071-3006
21	Set Screw, only	50787
22	Machine Screw, Fl. Hd., 3/8"-16x1" lg., Cad. Pl.	
23	Machine Screw, Hex. Hd.	289666
24	Lockwasher, No. 10, Stl., Tin Pl.	
26	Inspection Cover complete with wing screw and nut	451071-2201

WESTERN-CULLEN
DIVISION
FEDERAL SIGN & SIGNAL CORPORATION

WC FIBERGLASS GATE ARM and ACCESSORIES

CONFORMS WITH AAR RED AND WHITE REFLEX REFLECTIVE MARKING

- Mates with Other Manufacturer's Mechanisms and Adapters
- Two Major Sizes, Easily Telescoped. 13′ - 19′, 20′ - 26′
- Available with Complete Line of Mating Hardware: Lights and Adapters
- Lightweight, Easily Handled by One Man
- Durable
- Color Impregnated, No Painting Required

ORDERING REFERENCES

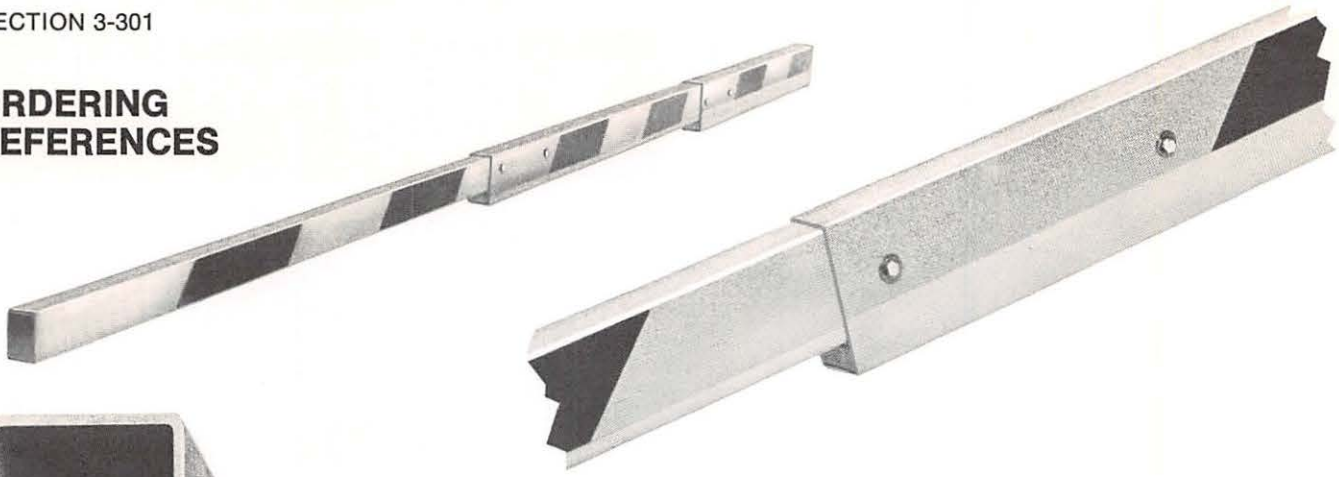

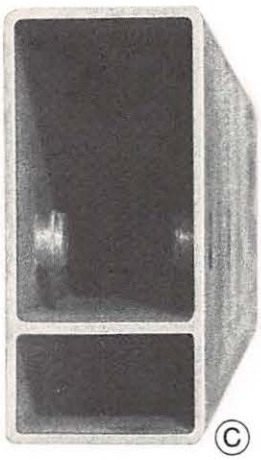

Ⓒ Independent bolts on each side of wall engaging expansion nut eliminate use of through bolts. Prevents crushing of arm.

Ⓐ The rugged gate arms are designed to withstand 90 mph velocity windload. Their excellent dielectric strength (200 volts/mil) provides added safety feature. Gate arms are color impregnated and do not need painting.

Ⓑ Internal web strengthens arm, serves as an aid to telescoping the mating (3) sections. Arms can be telescoped in one foot increments 13′ to 19′ and 20′ to 26′.

ARMS WITHOUT LIGHTS

Description	Part No.
13′ - 19′ arm assy.	38-0026-47
20′ - 26′ arm assy.	38-0026-57
13′ - 19′ arm:	
Butt section	38-0026-48
Mid section	38-0026-49
Tip section	38-0026-50
20′ - 26′ arm:	
Butt section	38-0026-58
Mid section	38-0026-59
Tip section	38-0026-60

ARMS WITH LIGHTS

Description	Part No.
13′ - 19′ arm assy. with (3) 1590 lites	38-0026-54
20′ - 26′ arm assy. with (3) 1590 lites	38-0026-56
13′ - 19′ arm assy. with (3) 1591 lites	38-0026-80
20′ - 26′ arm assy. with (3) 1591 lites	38-0026-81
13′ - 19′ arm assy. with (3) 1592 lites	38-0026-84
20′ - 26′ arm assy. with (3) 1592 lites	38-0026-85

SHEAR PIN

Description	Part No.
Shear Pin	3575-130-6

SPECIAL ADAPTER TO EXTEND GATE ARM 27′ to 44′

Description	Part No.
State arm length required	ES-6101-11

SEE FOLLOWING PAGE FOR CORRECT ORDERING REFERENCES

COUNTERWEIGHT ARM TO GATE ARM ADAPTERS

38-0026-67/71

38-0026-86

38-0026-42

Adapters permit using WC fiberglass gate arms with any pole mounted mechanism. WC also offers a special adapter for use with pedestal type mechanisms.

COUNTERWEIGHT ARM TO GATE ARM ADAPTERS

Description	Part No.
Model 10 Adapter Assy.	38-0026-42
Model 10A Adapter Assy.	38-0026-67/71
Model 10 Adapter Assy. (when using 1592 lites on arm)	38-0026-86
Pedestal Gate Assy.	38-0026-90

LIGHTS AVAILABLE FOR USE WITH FIBERGLASS ARMS

Type 1590

Type 1591 4″

Type 1592 7″

WESTERN-CULLEN DIVISION
FEDERAL SIGN & SIGNAL CORPORATION
"THE FUTURISTS"
2700 West 36th Place • Chicago, Illinois 60632

Printed in U.S.A.

M 5M 974

ORDERING REFERENCES FIBERGLASS GATE ARMS AND PARTS

ARMS WITH LIGHTS, WIRING

	Piece No.
13′—19′ Arm, Type 1591 (4″ dia.) Gate Lights, Engr. Grade Scotchlite	38-0026-80
As above but Hi-intensity Scotchlight	38-0026-137
20′—26′ Arm, Type 1591 (4″ dia.) Gate Lights, Engr. Grade Scotchlite	38-0026-81
As above but Hi-intensity Scotchlite	38-0026-138
13′—19′ Arm, Type 1592 (7″ dia.) Gate Lights, Engr. Grade Scotchlite	38-0026-84
As above but Hi-intensity Scotchlite	38-0026-114
20′—26′ Arm, Type 1592 (7″ dia.) Gate Lights, Engr. Grade Scotchlite	38-0026-85
As Above but Hi-intensity Scotchlite	38-0026-115

ARMS ONLY

13′—19′ Arm, Engr. Grade Scotchlite	38-0026-47
As above but Hi-intensity Scotchlite	38-0026-112
20′—26′ Arm, Engr. Grade Scotchlite	38-0026-57
As Above but Hi-intensity Scotchlite	38-0026-113

ARM MAINTENANCE PARTS

13′—19′ Butt Section, Engr. Grade Scotchlite	38-0026-48
13′—19′ Mid Section, Engr. Grade Scotchlite	38-0026-49
13′—19′ Tip Section, Engr. Grade Scotchlite	38-0026-50

ARM MAINTENANCE PARTS CONTINUED

	Piece No.
13′—19′ Butt Section, Hi-intensity Scotchlite	38-0026-106
13′—19′ Mid Section, Hi-intensity Scotchlite	38-0026-107
13′—19′ Tip Section, Hi-intensity Scotchlite	38-0026-108
20′—26′ Butt Section, Engr. Grade Scotchlite	38-0026-58
20′—26′ Mid Section, Engr. Grade Scotchlite	38-0026-59
20′—26′ Tip Section, Engr. Grade Scotchlite	38-0026-60
20′—26′ Butt Section, Hi-intensity Scotchlite	38-0026-109
20′—26′ Mid Section, Hi-intensity Scotchlite	38-0026-110
20′—26′ Tip Section, Hi-intensity Scotchlite	38-0026-111
End Plug, Butt Section	38-0026-51
End Plug, Mid Section	38-0026-52
End Plug, Tip Section	38-0026-53
13′—19′ Wiring Kit	38-0011-46
20′—26′ Wiring Kit	38-0011-47
4″ dia. Gate Light, Set of Three	1591-50
7″ dia. Gate Light, Set of Three	1592-50

WESTERN-CULLEN-HAYES, Inc.
2700 West 36th Place • Chicago, Illinois 60632

ORDERING REFERENCES BREAKAWAY ADAPTERS AND PARTS

BREAKAWAY ADAPTER

	Piece No.
For Model 10, Type S, Model 75 mast mounted gate signals, and 4″ dia. Gate Lights	3575-177
As above, but for 7″ dia. Gate Lights	3575-179
For Pedestal-type Gate Signals	3575-178

ADAPTER MAINTENANCE PARTS

Shear Bolt Assembly	3575-170-1
Arm Mount Sleeve	38-0026-44-2

WESTERN-CULLEN-HAYES, Inc.
2700 West 36th Place • Chicago, Illinois 60632

RECEIVED
JUL 25 1994

GENERAL OFFICE & FACTORY - CHICAGO, ILLINOIS

2700 West 36th Place
Chicago, IL 60632-1682

Phone: 312-254-9600
Telex: 25-3206
Fax: 312-254-1110

George S. Sokulski - V.P. Marketing
Rodney L. Yourist - Project/Systems Manager
William M. Crain - Customer Service Manager
Anna Herian - Customer Service Clerk

FACTORY - RICHMOND, INDIANA

P. O. Box 756, 120 No. Third Street
Richmond, IN 47375

Phone: 317-962-0526
Fax: 317-966-5374

Joe. J. Meyer - Vice President & General Manager, M/W
Norman Barr - Sales Representative
Joyce Plessinger - Customer Service Co-Ordinator

****

FIELD SALES PERSONNEL

NE REGION - U.S.
Angelo Tsudis, Reg. Mgr.
(412-795-2277)

NW REGION - U.S.
George Qunell, Reg. Mgr.
(Chicago Office)

SW REGION - U.S.
George P. Phillips, Reg. Mgr.
(Chicago Office)

INDUSTRIAL SALES
Carl J. Pamblanco, Sales Rep.
(Chicago Office)

WC Hayes

Railroad Safety Signals & Accessories

WC Hayes

WESTERN-CULLEN-HAYES, Inc.
2700 West 36th Place • Chicago, Illinois 60632
Telephone: 312/254-9600 • Telex 25-3206

Improve Motorist and Pedestrian Safety

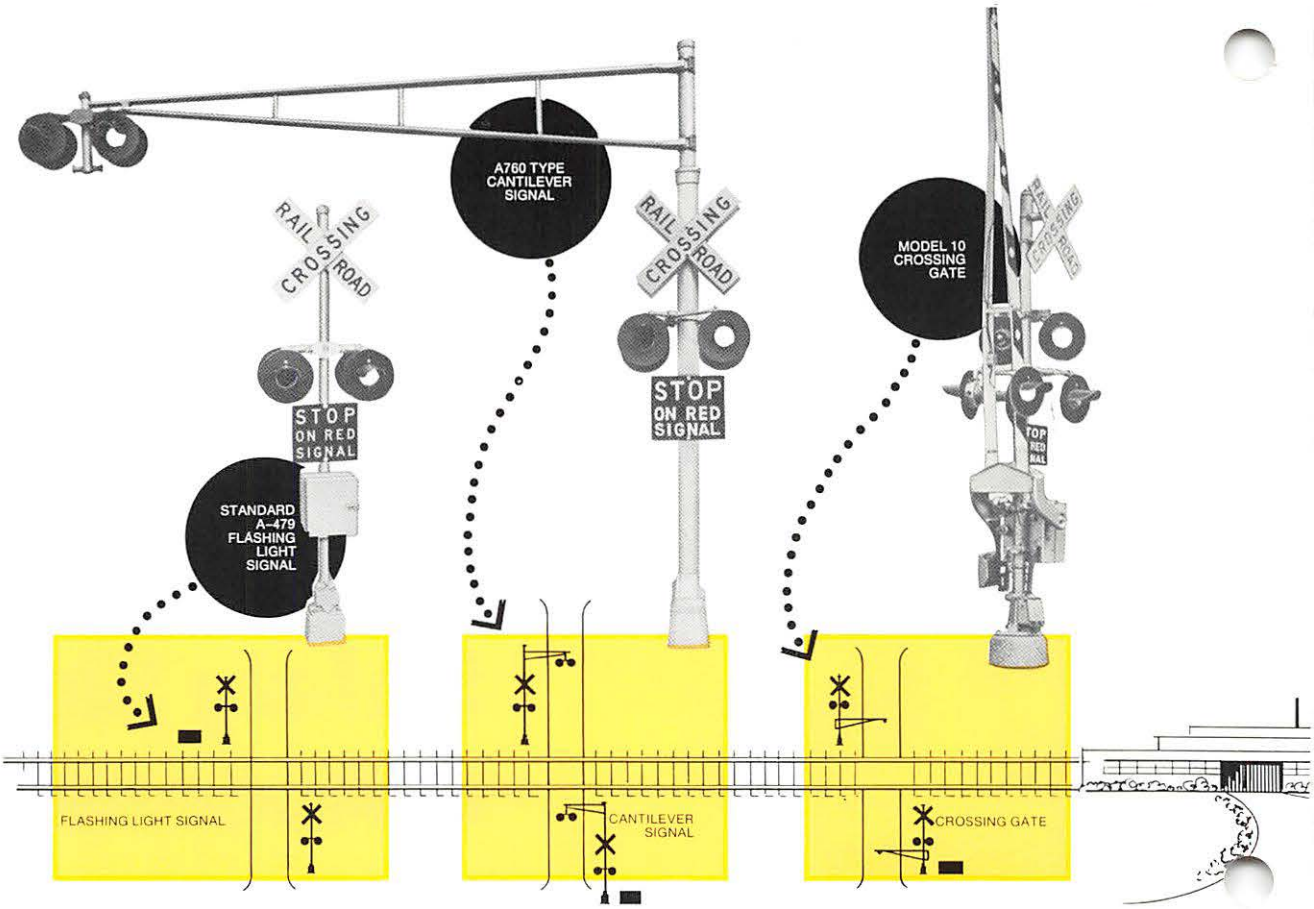

Since 1889... Western-Cullen-Hayes has supplied railroads and industries with warning equipment. Whatever your requirement, we have the range of experience and products to satisfy it.

Industrial CROSSING WARNING SYSTEM

- Provides SAFE, Dependable Protection at Economical Cost!
- Helps comply with new safety regulations.
- Factory-wired control case for installation by plant maintenance personnel.
- Manual Control.

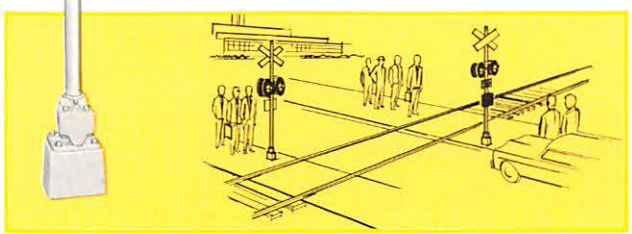

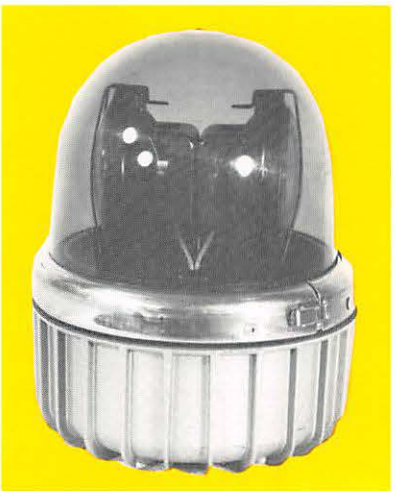

REVOLVING WARNING LIGHTS

12 VDC or 110 VAC

BELLS/RR

0333—Crossing Bell, 12 VDC
0666—Crossing Bell, 110 VAC
For top-of-pipe, side-of-pipe or wall mounting. Other voltages available.

SIGNS

- Cross Buck
- No. of Track
- Advance Warning Sign

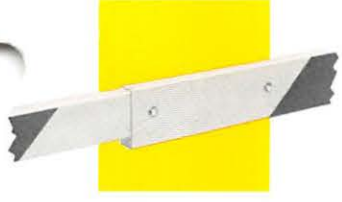

GATE ARMS

- Wooden
- Fiberglass
- Aluminum/Fiberglass

STEEL AND FIBERGLASS EQUIPMENT SHELTER BOXES

Improve Operating Safety with W-C-H Switch Lamps

• Provide brilliant, steady light • Allow safer yard operation with independent source of light for switch position indication • Increase night operating efficiencies • Theft-proof design • For both battery and commercial current

Package Systems Available

simplify the material acquisition process

Package No. 1—For primary battery operation

Package No. 1 is complete with:

- One Western-Cullen-Hayes Electric Switch Lamp (Specify type of lamp, lens and target colors, lamp tip dimensions, etc.)
- One No. 1245A-40P "Everlast" Battery Box to accommodate Edison Type ST Carbonaire battery, or equal (if battery is to be supplied, please so specify).

Package No. 2—For commercial current operation

Package No. 2 is complete with:

- One Western-Cullen-Hayes Electric Switch Lamp (specify type lamp, lens and target colors, lamp tip dimensions, etc.).
- One Type 1183-50 Underground Cable Terminal complete with voltage step-down transformer. Transformer will operate 10 volt, 0.3 ampere lamps from 115-volt, 60 cycle source. One transformer will handle up to four Switch Lamps.

Improve Work Area Safety...

PROTECTION WITH CONTROL

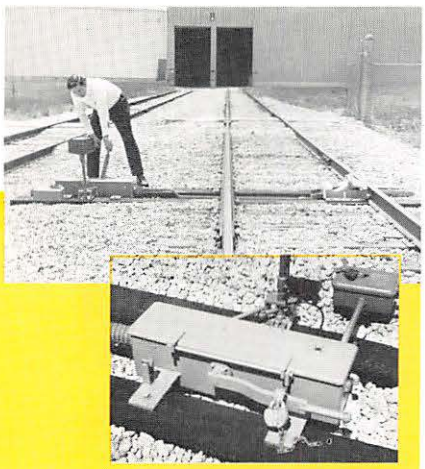

ELDO, a manual Derail Operator with an Electric Lock

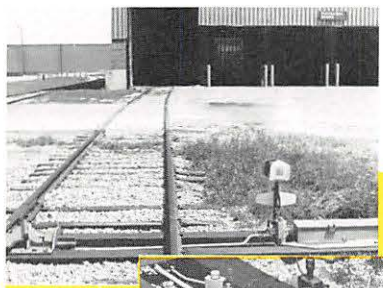

DeLectric® a power Derail Operator controlled remotely

Power BLUE FLAG

MODEL PBF

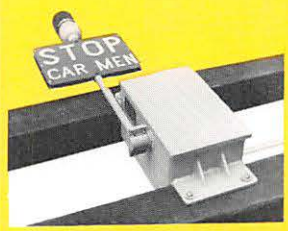

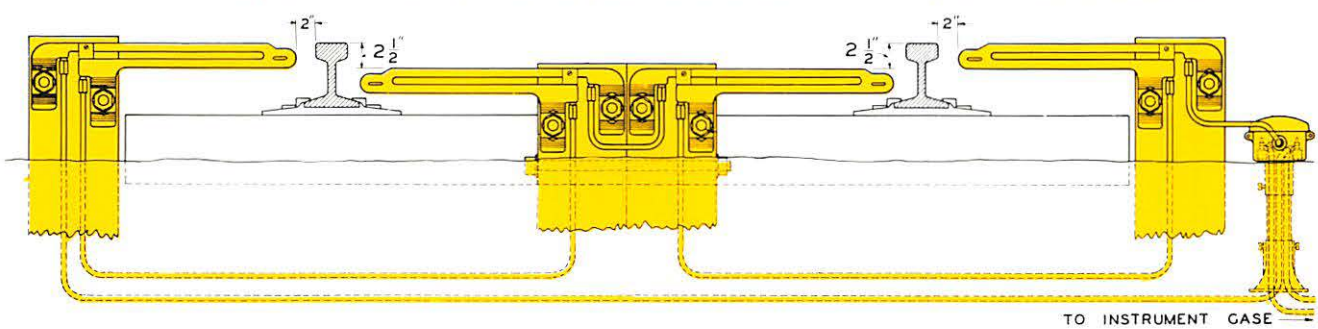

DRAGGING EQUIPMENT DETECTOR Reduced version is used as a Derailed Car Detector.

BONDING DRILL

For drilling holes in rails for track bonds. Bond punches and bonds also available.

Other Quality Products

DERAILS: Sliding, Hinged, Portable
• BUMPING POSTS • WHEEL STOPS • CHOCKS
• TRACK MAINTENANCE TOOLS • COMPROMISE JOINTS • SWITCH POINT GUARDS • CAR & LOCOMOTIVE REPLACERS

Call or contact your Western-Cullen-Hayes representative for details.

WESTERN-CULLEN-HAYES, Inc.
2700 West 36th Place • Chicago, Illinois 60632
Telephone: 312/254-9600 • Telex 25-3206

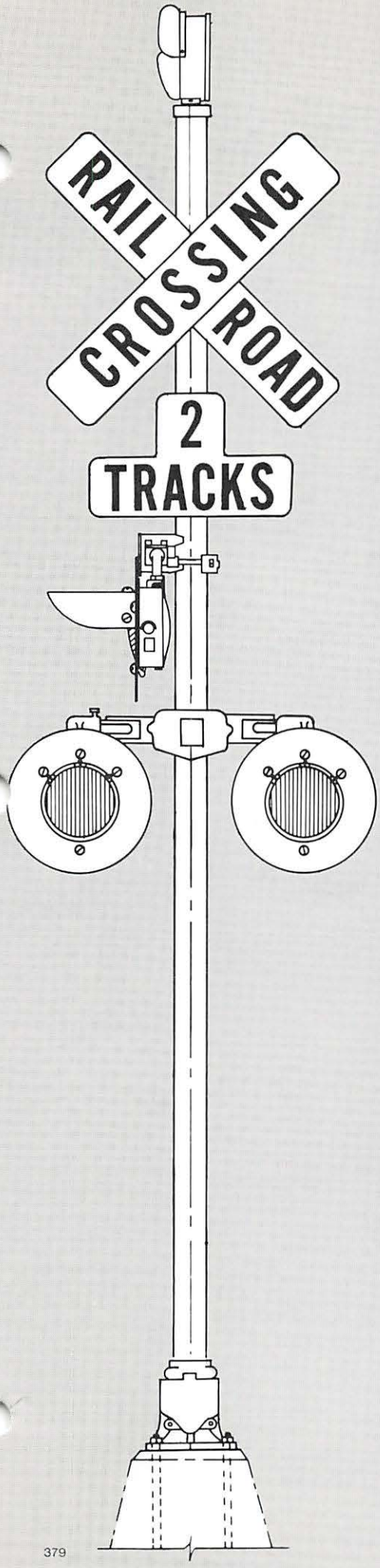

379

FLASHING LIGHT CROSSING SIGNALS

CONTENTS

	Page
General Information	
Flashing Light Signals with 8⅜" Dia. Lights	1-3 to 1-4
Flashing Light Signals with 12" Dia. Lights	1-51
Flashing Light Highway Crossing Signals Complete	
Signals with 8⅜" Dia. Lights	1-5 to 1-9
Signals with 12" Dia. Lights	1-52 to 1-54
Flashing Light Highway Crossing Signal Parts	
Anchorbolts	1-10 & 1-11
Bases	1-12 & 1-13
Roundels for 8⅜" Lights	1-14
Roundels for 12" Lights	1-55
Light Unit, Type 950, 8⅜" (Replacement Parts Only)	1-30 to 1-33
Light Unit, Type 970-201, 8⅜"	1-15 to 1-19
Light Unit, Type 975-201, 12"	1-56 & 1-57
Signs	1-20 to 1-25
Marker Lights	1-26
Supporting Brackets	1-27
No Turn Signals	1-28 & 1-29
Suggested Foundation Designs	1-34

WESTERN-CULLEN-HAYES, Inc.
2700 West 36th Place • Chicago, Illinois 60632
Telephone: 312/254-9600

SECTION 1

Flashing Light Crossing Signals

CONTENTS

	Page:
General Information	1-3 to 1-5
Flashing Light Highway Crossing Signal Complete	1-6 to 1-9
Flashing Light Highway Crossing Signal Parts	
Anchor Bolts, Masts, Pinnacles, Pole Steps	1-10 & 1-11
Bases	1-12 & 1-13
Roundels	1-14
Light Units, Type 970	1-15 to 1-19
Signs	1-20 to 1-25
Marker Lights	1-26
Supporting Brackets	1-27
NO TURN Signals	1-28 & 1-29
Light Units, Type 950 (Replacement Parts only)	1-30 to 1-33

WESTERN-CULLEN-HAYES, Inc.
2700 West 36th Place • Chicago, Illinois 60632 • Telephone: 312/254-9600 • Telex 25-3206

PRINTED IN U.S.A.

WESTERN-CULLEN-HAYES, Inc.

Type A-479-A
Flashing Light Highway Crossing Signal with Type 970-201 Light Units

ALL ALUMINUM

GENERAL INFORMATION

The Flashing Light Highway Crossing Signals manufactured by Western-Cullen Division represent the latest improvements in design. They meet all A.A.R. Specifications.

This catalog illustrates the most popular arrangements of flashing light signals and accessories, such as junction box-crossarm with two or four flashing light units for one-way or two-way indication. Other arrangements can be furnished to meet particular requirements.

Type 970-201 Crossing Signal Light unit housing is constructed of aluminum and has an efficient 8″ diameter parabolic reflector. The lamp receptacle is supported by a metal bracket, positioned to insure exact focusing of lamp filament to reflector. The filament is also in alignment with the side light openings which are fitted with clear glass discs, unless otherwise specified.

The Type 970-201 Crossing Signal differs from previous designs in that it includes an integral hub at the top threaded for 1¼″ pipe fitting. It can readily be attached to the usual junction box-crossarms by using adapter elbows with:

a — threaded fitting on one end and clamp fitting on the other, or
b — threaded fitting on both ends.

The Type 970-201 Crossing Signal Light unit is completely interchangeable with the previous design, Type 950A-201, by use of a proper elbow, as illustrated in this catalog section.

The Type 970-201 Crossing Signal Light unit is lighter in weight (9 pounds) than previous design. A Two-conductor cord is wired to the lamp unit and is long enough for attachment to terminals in the junction box of the crossarm.

The 960 types of junction box-crossarms are constructed of cast aluminum with two three-unit terminal strips: 12 binding posts. Each light unit is attached to a suspension bracket which provides for adjustment of the light beam alignment. Adjustment can be made of each light unit independently of the other units; horizontal and vertical alignment of each unit can be adjusted and locked in place independently.

The 960 type junction box-crossarm is the same as the previous type 950 design, except for adapter elbows used in attaching the light units.

Roundels furnished are the A.A.R. standard, 8⅜″ diameter, red, with photometric rating for color of 220-300. Listings below show the types available. No. 5323P roundels (red plastic) are furnished unless other type is specified on the order. (*)

The "NO TURN" signal, shown on Page 1-28 in this section may be used in conjunction with flashing light signals at locations where mounting of additional flashing light units would not provide suitable protection. It is the safest method of protecting a street parallel to a railroad without interfering with traffic not crossing the tracks.

In this catalog section no attempt has been made to show all possible combinations of flashing light highway crossing signals. We will gladly furnish plans and information for special assemblies.

**Note:* Roundels Available for Flashing Lights Units are:

CL-17	CL17P
5321	
5323	5323P
5327	
5332	
5357	

Speed Table For Crossing Signal Starts

Seconds		10	15	20	25	30	35	40	45	50	55	60
Miles Per Hour	Feet Per Second	Distance Traveled in Feet										
1	1.46	14.6	22.0	29.3	36.6	44.0	51.3	58.6	66.0	73.3	80.6	88.0
2	2.93	29.3	44.0	58.6	73.3	88.0	102.6	117.3	132.0	146.6	161.3	176.0
3	4.4	44	66	88	110	132	154	176	198	220	242	264
4	5.86	58.6	88	117.3	146.6	176	205.3	334.6	264	293.3	322.6	352
5	7.3	73	110	147	183	220	257	293	330	367	403	440
10	14.6	146	220	293	366	440	513	587	660	733	807	880
15	22.0	220	330	440	550	660	770	880	990	1,100	1,210	1,320
20	29.3	293	440	587	733	880	1,027	1,173	1,320	1,467	1,613	1,760
25	36.7	367	550	733	917	1,100	1,283	1,467	1,650	1,833	2,017	2,200
30	44.0	440	660	880	1,100	1,320	1,540	1,760	1,980	2,200	2,420	2,640
35	51.3	513	770	1,027	1,283	1,540	1,797	2,053	2,310	2,567	2,823	3,080
40	58.7	587	880	1,173	1,467	1,760	2,053	2,347	2,640	2,933	3,227	3,520
45	66.0	660	990	1,320	1,650	1,980	2,310	2,640	2,970	3,300	3,630	3,960
50	73.3	733	1,100	1,467	1,833	2,200	2,567	2,933	3,300	3,667	4,033	4,400
55	80.7	807	1,210	1,613	2,017	2,420	2,823	3,227	3,630	4,033	4,437	4,840
60	88.0	880	1,320	1,760	2,200	2,640	3,080	3,520	3,960	4,400	4,840	5,280
65	95.3	953	1,430	1,907	2,383	2,860	3,337	3,813	4,290	4,767	5,243	5,720
70	102.7	1,027	1,540	2,053	2,567	3,080	3,593	4,107	4,620	5,133	5,647	6,160
75	110.0	1,100	1,650	2,200	2,750	3,300	3,850	4,400	4,590	5,500	6,056	6,600
80	117.3	1,173	1,760	2,347	2,933	3,520	4,107	4,693	5,280	5,867	6,453	7,040
85	124.7	1,247	1,870	2,493	3,117	3,740	4,363	4,987	5,610	6,233	6,858	7,480
90	132.0	1,320	1,980	2,640	3,300	3,960	4,620	5,280	5,940	6,600	7,260	7,920
95	139.3	1,393	2,090	2,787	3,483	4,180	4,877	5,573	6,270	6,967	7,663	8,360
100	146.7	1,467	2,200	2,933	3,667	4,400	5,133	5,867	6,600	7,333	8,067	8,800
105	154.0	1,540	2,310	3,080	3,850	4,620	5,390	6,160	6,930	7,700	8,470	9,240
110	161.3	1,613	2,420	3,227	4,033	4,840	5,647	6,453	7,260	8,067	8,873	9,680
115	168.6	1,686	2,530	3,373	4,217	5,060	5,903	6,747	7,590	8,434	9,277	10,120
120	176.0	1,760	2,640	3,520	4,400	5,280	6,160	7,040	7,920	8,800	9,680	10,560
125	183.3	1,833	2,750	3,667	4,583	5,500	6,417	7,334	8,250	9,167	10,084	11,000
130	190.7	1,907	2,860	3,813	4,767	5,720	6,673	7,627	8,580	9,534	10,487	11,440

NOTE: Where length of track circuit is known, time in seconds can be determined by dividing its length by "Feet Per Second" at train speed selected.

* Does not allow for drop-away time of relays.

Information Desired With Inquiry For Complete Highway Crossing Signal Installation

We are pleased to furnish engineering information and to quote on requirements for Highway Crossing Signal Installations. Where possible, inquiries should be accompanied by a sketch, or preferably, a scale track plan showing the location of the highway.

The following information is especially desired:

1. Is "Railroad Crossing" sign required?*
2. Is number of tracks sign required? If so, advise numeral.*
3. Is "Stop on Red Signal" sign required?**
4. Advise maximum authorized speed of train movement. (A.A.R. recomcomendation is 20 seconds warning for fastest train)
5. What special operating conditions exist within the area?
6. Specify whether there are any switches within the approach section.
7. Specify if there is any signal equipment now in place which might be affected by this installation.
8. Specify whether Diesel-Electric or Electric propulsion railway.
9. What electric power is available for operation of signals? If D.C., specify voltage; if A.C., specify voltage and frequency.
10. Specify whether stand-by electric service is required. (Can continuity of available service be depended upon?)
11. Specify weight and type of rail and whether four or six hole insulated rail joints.
12. Specify if track ballast is rock, gravel, sand, cinders, or other material.
13. State whether highway is paved. Width of highway or travelled portion. Specify class of paving.

*Available in Reflector Unit Type, both synthetic enamel and vitreous enamel finish and in Reflex-Reflecting Sheet Type.

**Not available in vitreous enamel finish.

Type A-479-A
Flashing Light Highway Crossing Signal with Type 970-201 Light Units

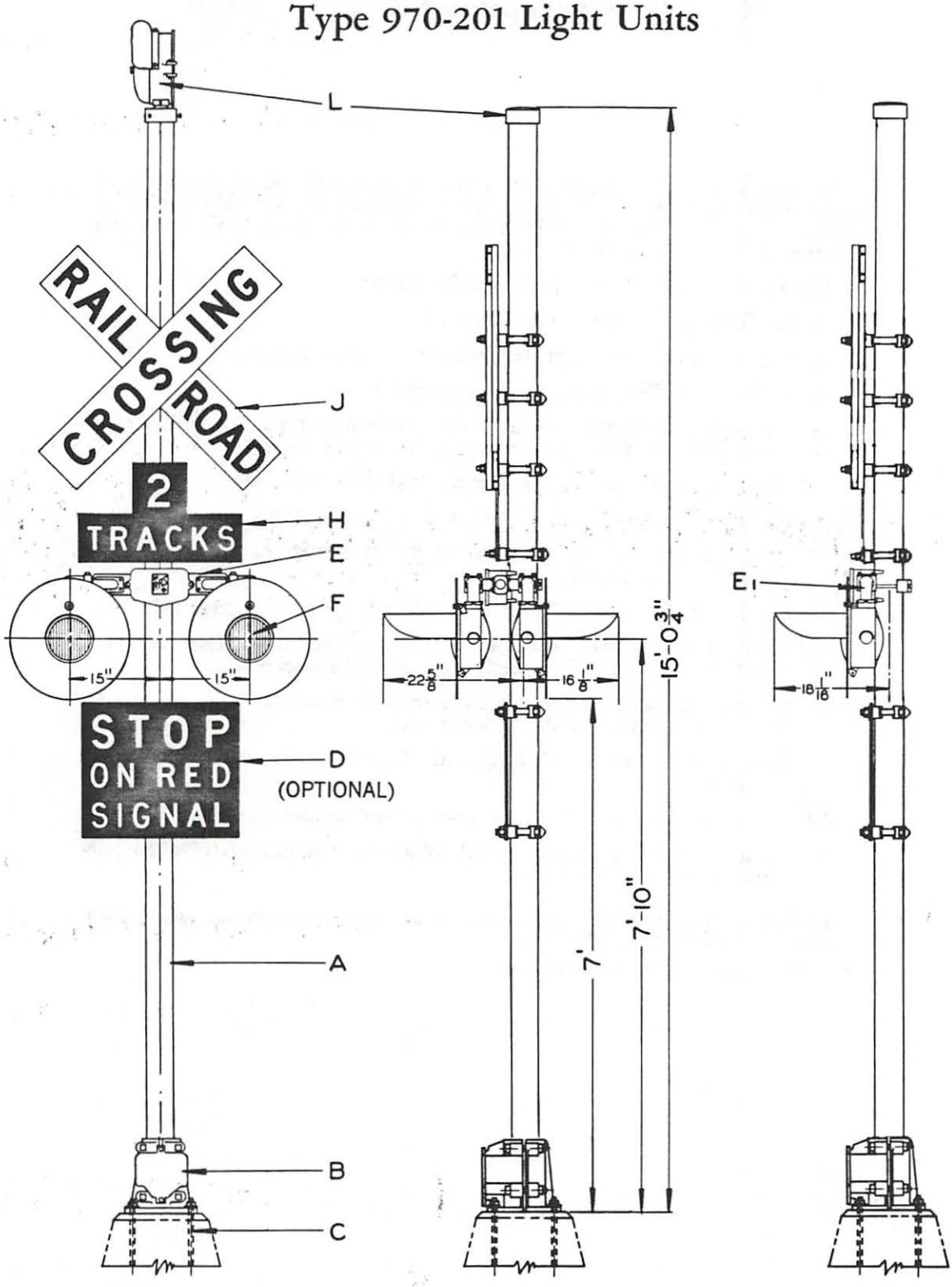

Ref. A

Ref. A1

Ref. B1

Type A-479-A
Flashing Light Highway Crossing Signal with Type 970-201 Light Units

By far the majority of Flashing Light Type Highway Crossing Signal installations require two Flashing Light signals, two-way indication; one with a bell and one with a pinnacle, although, frequently two bells are used. Western's A-479A all-aluminum assembly with 4" I.D. mast, junction box type base having 9½"x9½" anchor bolt spacing and reflex-reflecting sheet type signs on extruded or sheet aluminum, meet most requirements. Type 222CR Crossing Bell is usually required, but Type 1275CR Pedestrian Crossing Bell will be supplied when specified. Plastic roundels having 30° horizontal spread and 15° down deflection are furnished as standard. For other Roundels see Page 1-14.

Below are ordering references for these most frequently used assemblies. See Page 1-10 for information for ordering variations from these assemblies.

If "Stop-On-Red Signal" sign is required it must be specified.

Ref.	Description	Piece No.
A	Flashing light Highway Crossing Signal complete; two-way indication, with 222CR Bell. (specify numeral on track sign and voltage and wattage of lamp bulbs, if required)	A479AB
A1	Same as Ref. A, but with pinnacle in place of bell	A479AP
B	Flashing Light Highway Crossing Signal complete; one-way indication, with 222CR Bell. (specify numeral on track sign and voltage and wattage of lamp bulbs, if required)	A479AB-1
B1	Same as Ref. B, but with pinnacle in place of bell	A479AP-1

WESTERN-CULLEN-HAYES, Inc.

Type A-479-A
Flashing Light Highway Crossing Signal with Type 970-201 Light Units

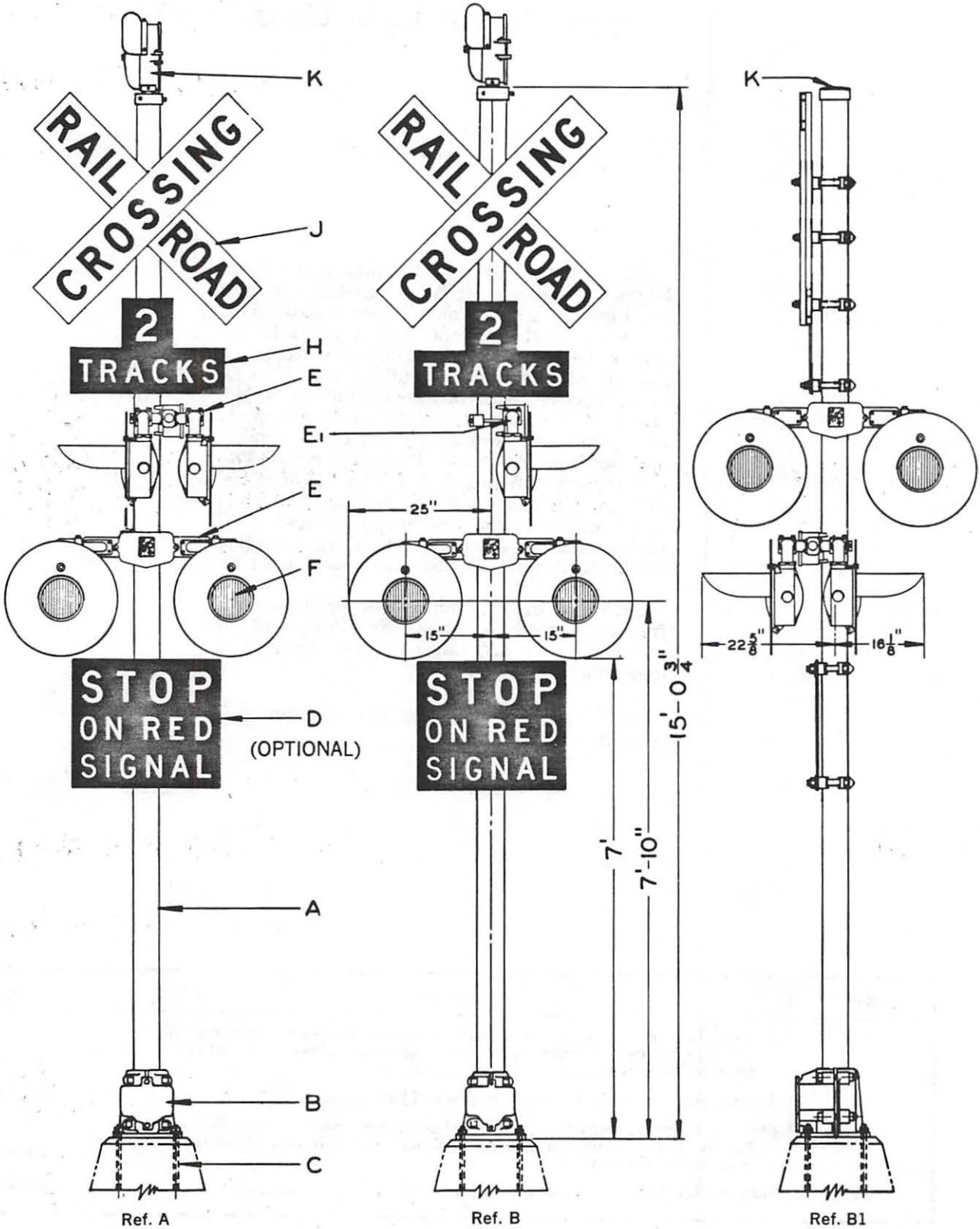

Type A-479-A
Flashing Light Highway Crossing Signal with Type 970-201 Light Units

Many locations require Flashing Light Highway Crossing Signals having extra light assemblies to provide indication to traffic on streets or highways paralleling the railroad, or on curved approaches, in addition to the Flashing Lights that provide the indication to traffic on the street or highway that crosses the tracks.

Generally these extra lights are mounted 90° to the right of and above the main lights, as illustrated.

The extra lights can be mounted at any angle which may be specified, or even on special brackets as shown on Page 1-27. Given the requirements we will be pleased to submit drawings of assemblies required.

These commonly used assemblies, with extra lights, are usually Western's all-aluminum A479A type with 4" I.D. mast, junction box type base having 9½" x 9½" anchor bolt spacing and reflex-reflecting sheet type signs on extruded or sheet aluminum. One signal with 222CR bell and one with pinnacle are normally required at each crossing, but the Type 1275CR bell will be supplied when specified. Plastic roundels having 30° horizontal spread and 15° down deflection are furnished as standard. For other Roundels see Page 1-14.

Below are ordering references for the assemblies illustrated on the opposite page. See Page 1-10 for information for ordering variations from these assemblies.

If "Stop-On-Red Signal" sign is required it must be specified.

Ref.	Description	Piece No.
A	Flashing Light Highway Crossing Signal complete; two-way indication main lights, two-way indication extra lights mounted 90° to the right and 222CR Bell. (specify numeral on track sign and voltage and wattage of lamp bulbs)	A479AB-8
A1	Same as Ref. A, but with pinnacle in place of bell	A479AP-8
B	Flashing Light Highway Crossing Signal complete; two-way indication main lights, with one-way indication extra lights mounted 90° to the right and 222CR Bell. (specify numeral on track sign and voltage and wattage of lamp bulbs)	A479AB-6
B1	Same as Ref. B but with Pinnacle in place of bell	A479AP-6

Parts for Type A-479-A Flashing Light Highway Crossing Signal with Type 970-201 Light Units

When ordering assemblies other than are shown on Pages 1-6 to 1-9 please use the reference data below, enumerating components required.

If extra light assemblies are called for, specify degree of angle to right or left of main lights.

We will gladly furnish plans and information for special assemblies, including supporting brackets as shown on Page 1-27, Marker Lights on Page 1-26, etc.

Ref.	Description
1	Type A479-A Aluminum Flashing Light Highway Crossing Signal with the following equipment.
A	Pipe Mast (See Page 1-11)
B	Base (See Page 1-13)
C	Anchor Bolts (See Page 1-11)
D	"Stop on Red Signal" sign (See Page 1-21)
E	Flashing Light Assembly (See Page 1-15)
F	Roundels (See Page 1-3 or 1-14)
G	Specify voltage and wattage of lamps
H	"Tracks" sign (See Page 1-23)
J	"Railroad Crossing" sign (See Page 1-25)
K	Bells (See Section 5)
L	Pinnacle (See Page 1-11)

Parts for Type A-479-A
Flashing Light Highway Crossing Signals

PIPE MAST

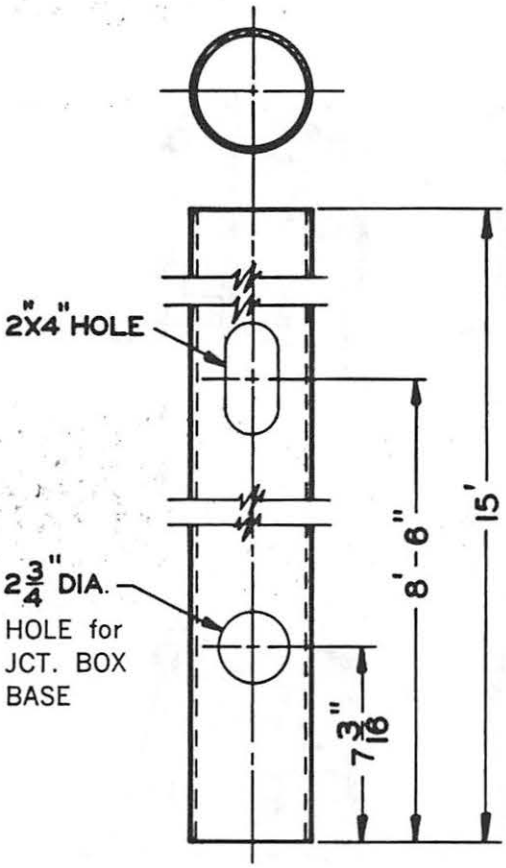

Ref. A

PINNACLE

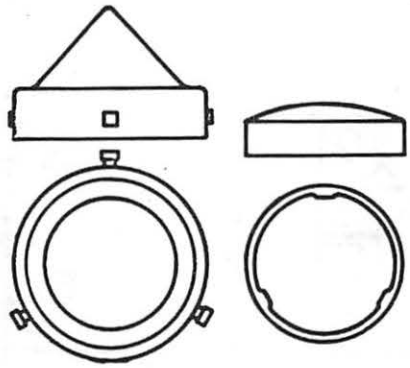

Ref. K1 Ref. K

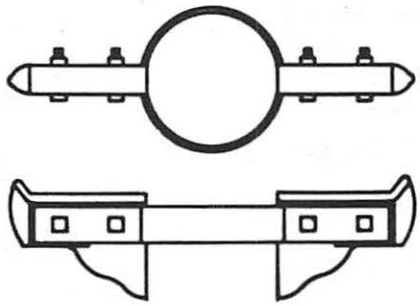

Ref. L

ANCHOR BOLTS

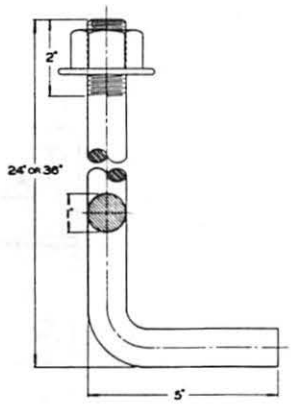

Ref. C & C1

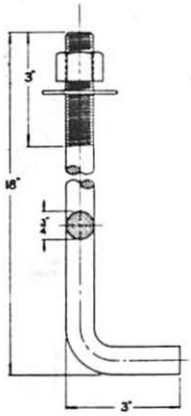

Ref. C2

Ref.	Description	Piece No.
A	Pipe Mast. 4" I.D. x 15' long, drilled for Jct. Box Base	714-50U-2
A1	Pipe Mast, 4" I.D. x 15' long	714-50-1
A2	Pipe Mast, 5" I.D. x 15' long, drilled for Jct. Box Base	715-50U-2
A3	Pipe Mast, 5" I.D. x 15' long	715-50-1
C	Type 11079 Anchor Bolt 1" x 36" lg. complete with washer and hex. nut (galvanized)	11079
C1	Same as Ref. C, but 24" lg	11079-1
C2	Type 2144 Anchor Bolt ¾" x 18" lg	2144-18
K	Type 110A Pinnacle for 4" I.D. pipe post	110A-6
K1	Type 110A Pinnacle for 5" I.D. pipe post	110-A 8
L	Pole Step complete for 4" I.D. pipe post	10151
L1	Same as Ref. L. but for 5" I.D. pipe post	10152

WESTERN-CULLEN-HAYES, Inc.

Type A-479-A
Flashing Light Highway Crossing Signals
Clamp Type Bases

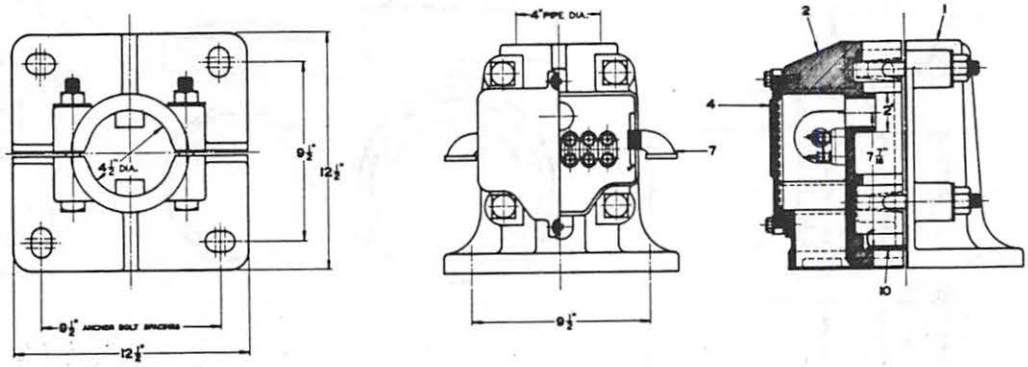

Ref. B & B3

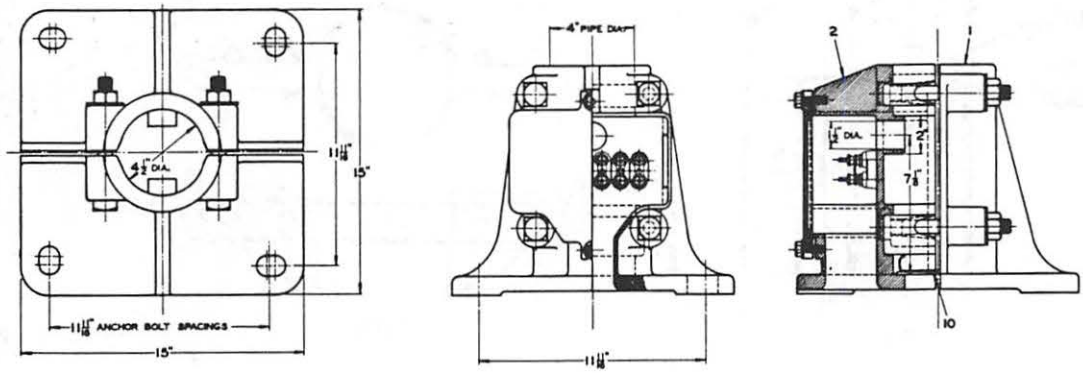

Ref. B1 & B5

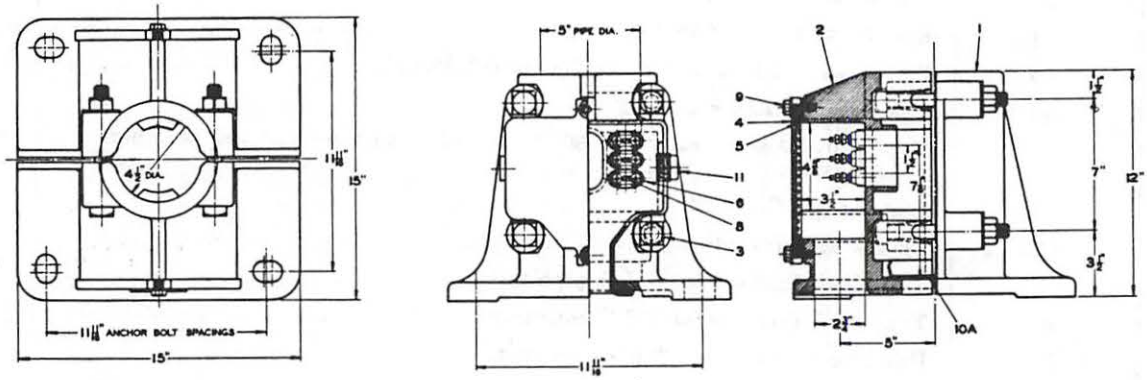

Ref. B6 & B7

Parts for Type A-479-A
Flashing Light Highway Crossing Signals
Clamp Type Bases

These clamp type signal bases are available as plain split bases or with one or both halves having a cast-in junction box capable of holding a bakelite terminal strip of 6 units (12 binding posts). The base may be furnished complete or the half with the junction box may be obtained separately for use with signal assemblies already installed.

Ref.	Description	Piece No.
B	Type 14492 Plain Split Base Assembly, for 4" I.D. pipe, with 9½" x 9½" anchor bolt spacing. Cast Aluminum	14492A
B1	Type 2143 Plain Split Base Assembly, for 4" I.D. pipe, with 11-11/16" x 11-11/16" anchor bolt spacing. Cast Aluminum	2143A
B2	Type 2145 Plain Split Base Assembly, for 5" I.D. pipe with 11-11/16" x 11-11/16" anchor bolt spacing. Cast Iron	2145
B3	Type 2146 Split Base Assembly with junction box on one half and six terminals, for 4" I.D. pipe, with 9½" x 9½" anchor bolt spacing. Cast Aluminum.	2146A-11
B4	Same as Ref. B3 but junction box on both halves	2146A-12
B5	Type 2147 Split Base Assembly with junction box on one half and six terminals, for 4" I.D. pipe, with 11-11/16" x 11-11/16" anchor bolt spacing. Cast Aluminum.	2147A-11
B6	Same as Ref. B5 but junction box on both halves	2147A-12
B7	Type 2148 Split Base Assembly with junction box on one half and six terminals, for 5" I.D. pipe, with 11-11/16" x 11-11/16" anchor bolt spacing. Cast Iron.	2148-11
B8	Same as Ref. B7, but junction box on both halves	2148-12
	REPLACEMENT PARTS	
1	Plain Half Base Casting for ref. B (cast aluminum)	1449A-1
1A	Plain Half Base Casting for ref. B1 (cast aluminum)	2143A-1
1B	Plain Half Base Casting for ref. B2 (cast iron)	2145-1
2	Junction Box Half Casting for ref. B3 & B4 (cast aluminum)	2146A-15C
2A	Junction Box Half Casting for ref. B5 & B6 (cast aluminum)	2147A-15A
2B	Junction Box Half Casting for ref. B7 & B8 (cast iron)	2148-15
3	¾" x 6½" lg. mach. bolt with sq. hd. and hex. nut	2148-16
4	Cover (cast iron)	2148A-16
4A	Cover (cast aluminum)	
5	Flax packing 5/16" sq. x 29" lg.	
6	Terminal strip (12 post)	2506-112
6A	Terminal strip for ref. B7 & B8 only (6 post)	2506-106
7	Ventilator	1143-16
8	No. 10-32 x ⅝" lg. rd. hd. mach. screw	
9	⅜"—16 x 1¼" lg. hex. cap screw and plain washer	
10	Pipe shield	2147-24
10A	Pipe shield for ref. B7 & B8 only	2149-24
11	Pipe Plug, 1¼"	

WESTERN-CULLEN-HAYES, Inc.

Parts for Type A-479-A
Flashing Light Highway Crossing Signals
Roundels

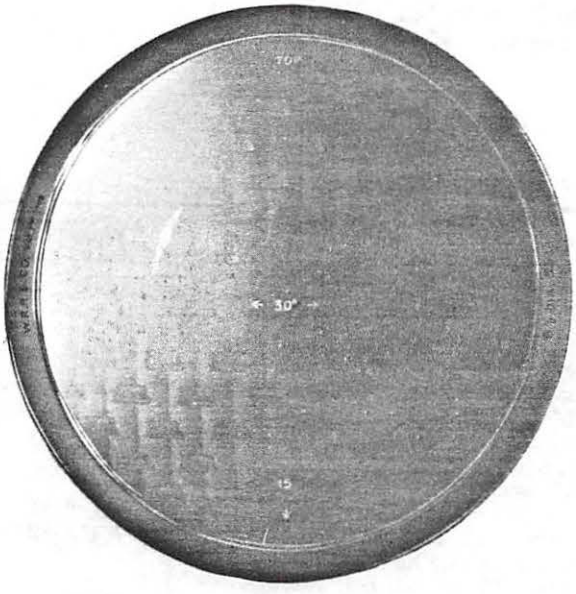

Ref. F4

Roundels furnished are A.A.R. Standard 8⅜" diameter, Red, with photometric rating for color of 220-300. No. 5323 and 5323P Roundels are recommended by the A.A.R. Signal Section, for general use.

Types CL-17P, 5323P and 5357 are plastic.

Ref.		Piece No.
F	Type CL-17 Roundel, 30° horizontal spread, glass	CL-17
F1	Type CL-17 Roundel, 30° horizontal spread, plastic	CL-17RP
F2	Type 5323 Roundel, 30° horizontal with 15° downward deflection, glass	5323
F3	Type 5323P Roundel, 30° horizontal with 15° downward deflection, plastic	5323P
F4	Type 5327 Roundel, 20° horizontal with 32° downward deflection, glass	5327
F5	Type 5332 Roundel, 70° horizontal, glass	5332
F6	Type 5357 Roundel, long range 20° (15°-5°) horizontal deflecting, 10° vertical spread	5357

Parts for Type A-479-A Flashing Light Highway Crossing Signal with Type 960 Crossarm and Type 970-201 Light Units

CAST ALUMINUM CROSSARM, BRACKETS AND ELBOWS SHEET ALUMINUM BACKGROUNDS AND HOODS

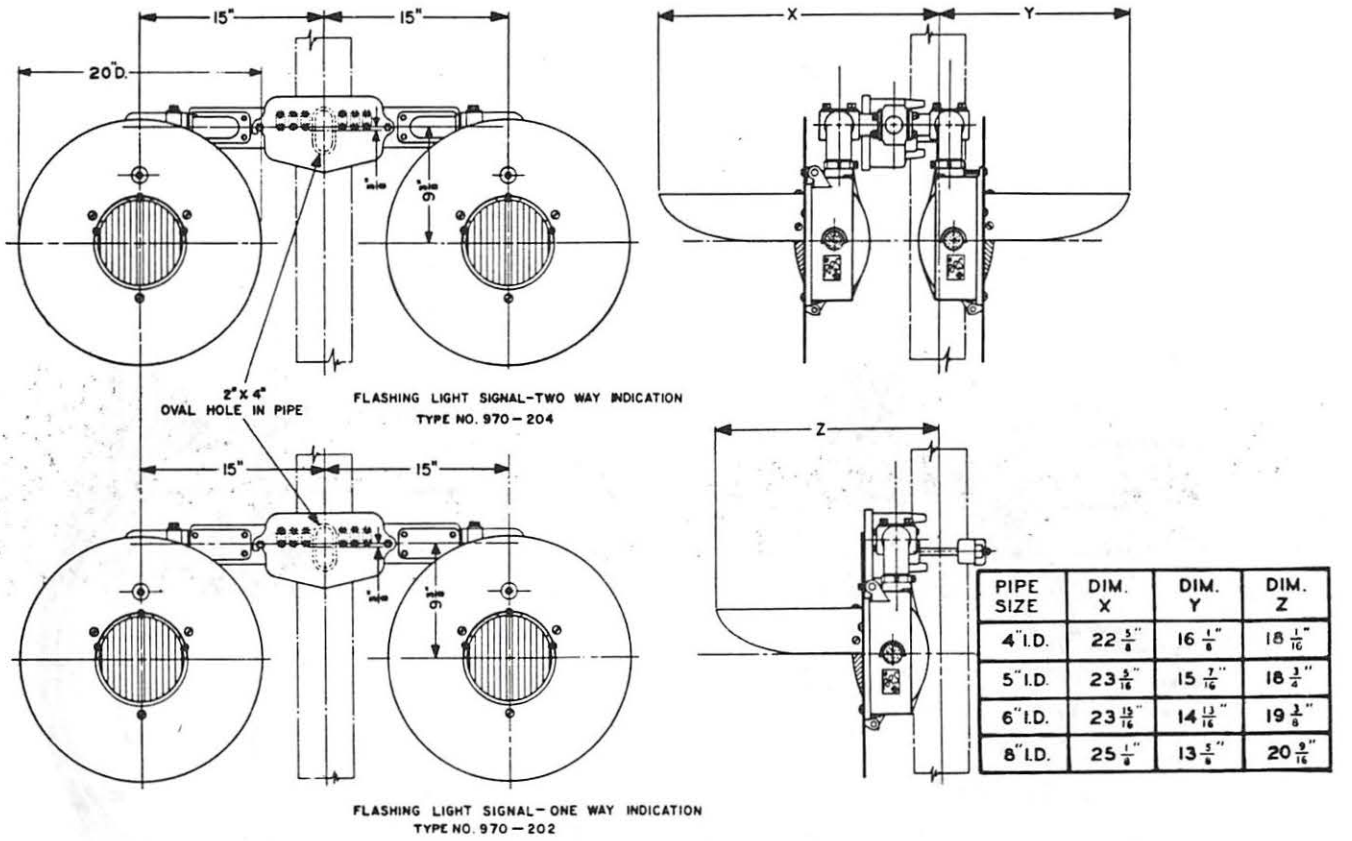

PIPE SIZE	DIM. X	DIM. Y	DIM. Z
4" I.D.	22 5/8"	16 1/8"	18 1/16"
5" I.D.	23 5/16"	15 7/16"	18 3/4"
6" I.D.	23 15/16"	14 13/16"	19 3/8"
8" I.D.	25 1/8"	13 5/8"	20 9/16"

Type 970-201 Light Units are equipped with Parabolic glass reflectors, 8⅜" diameter red roundels and single contact, bayonet base, receptacles positioned to accommodate S-8 or S-11 lamp bulb, having 1¼" light center length.

Ref.	Description	Piece No.
E	Type 970 Flashing Light Unit Assembly with Type 960 junction box crossarm for two-way indication with 4 light units. (specify I.D. of pipe and roundels)	970-204
E1	Same as Ref. E but one-way indication with 2 light units	970-202
E2	Type 970 Light Unit only (specify Roundel)	970-201
E3	Type 960 Junction Box Crossarm for two-way indication. (specify I.D. of pipe)	960-5
E4	Same as Ref. E3 but for one-way indication	960-3

For replacement parts see page 1-17 and 1-19.

WESTERN-CULLEN-HAYES, Inc.

Parts for Type A-479-A
Flashing Light Highway Crossing Signal
Type 970-201 Light Unit

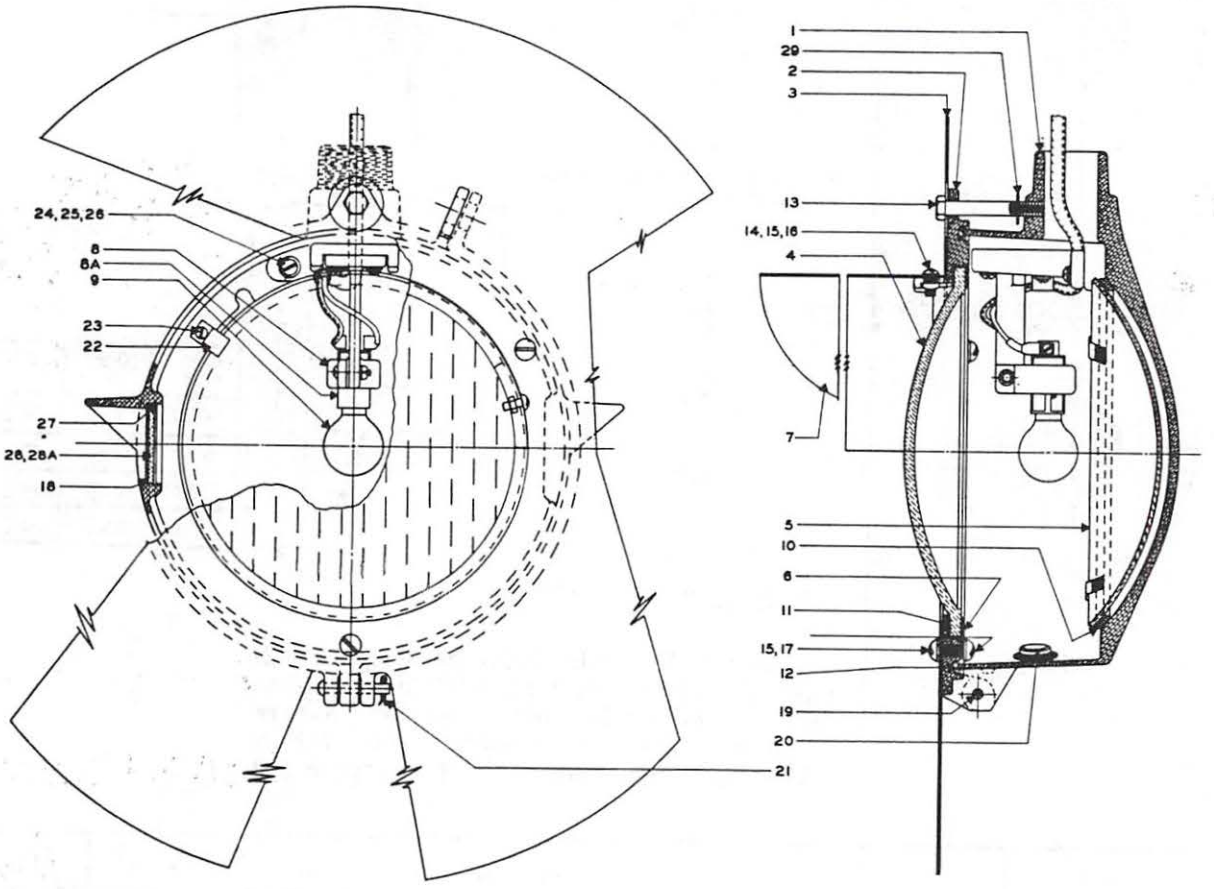

Ref. A

Parts for Type A-479-A
Flashing Light Highway Crossing Signal
Type 970-201 Light Unit

All castings in the Type 970-201 Light Unit are aluminum, with sheet aluminum hood and background.

Ref. No.	Description	Piece No.
A	Type 970 Flashing Light Unit assembly, specify roundel desired and voltage and wattage of lamp, if required	970-201
	REPLACEMENT PARTS	
1	Case	970-1
2	Cover	970-2
3	Background	960-13
4	Roundel (see page 1-3)	
5	Reflector	950-275C
6	Roundel Retainer	960-19
7	Hood	960-9
8	Lamp Bracket and Socket sub-assembly	970-20
8A	Lamp Receptacle with insulating sleeve	970-18
9	Electric Lamp (specify voltage and wattage)	
10	Reflector Supporting Ring	970-16
11	Roundel Gasket	825
12	Door Packing	960-18
13	5/16" x 2¼" lg. hex. hd. cap screw, steel	
14	¼" x 20 x ½" lg. rd. hd. mach. screw	
15	¼" Internal Tooth Lock Washer	
16	¼"-20 Sq. nut, brass	
17	¼"-20 x ¼" lg. rd. hd. mach. screw, brass	
18	Side Light Gasket	960-48
19	Hinge Pin	950-259
20	Ventilator	1265-6
21	3/32" x ⅝" lg. Cotter Pin	
22	Reflector Holding Clip	970-17
23	No. 8-32 x ½" lg. rd. mach. screw	
24	No. 10-24 x ¾" lg. rd. hd. mach. screw	
25	No. 10 Plain Washer	
26	No. 10 Spring Lock Washer	
27	Retaining Ring	960-7
28	Side Light Glass Disc	811
28A	Side Light Blank Plate	950A-261
29	Crescent Retainer	960-15

WESTERN-CULLEN-HAYES, Inc.

Parts for Type A-479-A
Flashing Light Highway Crossing Signals
Type 960 Crossarm

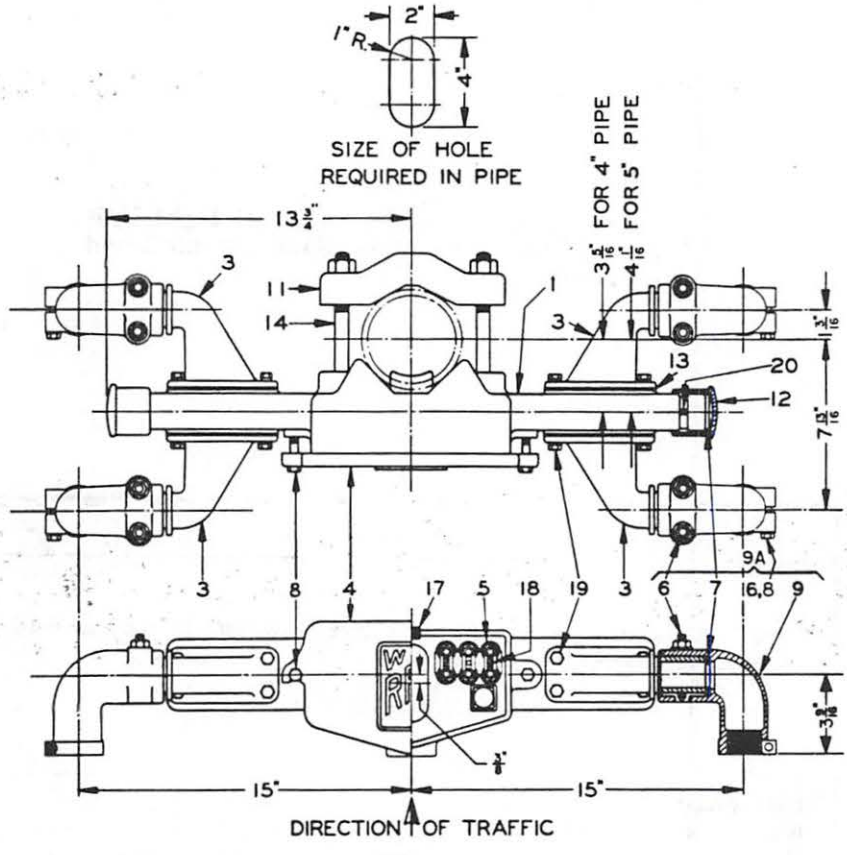

Ref. A

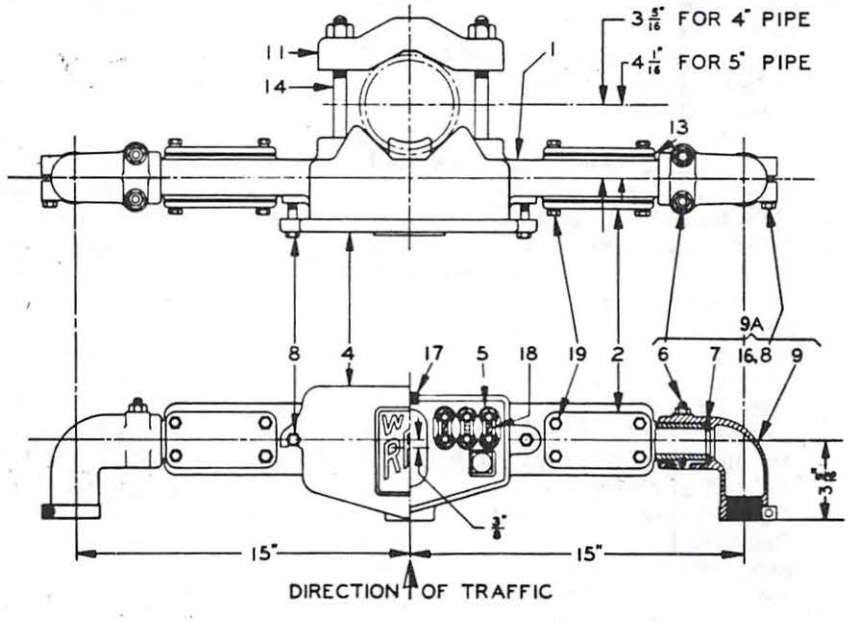

Ref. B

Parts for Type A-479-A
Flashing Light Highway Crossing Signals
Type 960 Junction Box Crossarm

All castings in the Type 960 Junction Box Crossarms are aluminum. Replacements parts of cast aluminum are interchangeable with cast iron parts of former designs and will be furnished for all replacements.

Ref.	Description	Piece No.
A	Type 960 Junction Box Crossarm for two-way indication. (Specify I.D. of pipe)	960-5
B	Same as Ref. A but for one-way indication	960-3
	REPLACEMENT PARTS	
1A	Junction Box Crossarm, sub-assembly of Ref. 1, 4, 5, 17 & 18	950A-62
2	Cover Plate	950A-39
3	Bracket, 3½" extension	950A-57
4	Cover	950A-20
5	Terminal Block, complete, 6 binding posts	2506-106
6	"U" Bolt, ⅜"-16, complete with nuts	950-31
7	Gasket, sponge rubber	950-28
8	⅜"-16 x 2" lg. hex. hd. cap screw, steel	
9	Supporting Bracket casting only	960-131
9A	Supporting Bracket, sub-assembly of Ref. 6, 7, 8, 9, & 16	960-163
11	Adapter Clamp	950A-34
12	Cap	950A-29
13	Gasket, Cork	950-27
14	⅝"-11 x 6" lg. sq. hd. mach. bolt and hex. nut for 4" pipe	
14A	⅝"-11 x 7½" lg. sq. hd. mach. bolt and hex. nut for 5" pipe	
16	⅜" lock washer, steel	
17	⅜" dia. x 27" lg. torchwick packing	
18	No. 10-32 x ⅝" lg. fil. hd. mach. screw and lock washer, steel	
19	⅜"-16 x ⅞" lg. hex. hd. cap screw and lock washer, steel	
20	¼"-20 x ½" lg sq. hd. cup pt. set screw, steel	

WESTERN-CULLEN-HAYES, Inc.

Parts for Type A-479-A
Flashing Light Highway Crossing Signals

"STOP ON RED SIGNAL" SIGN

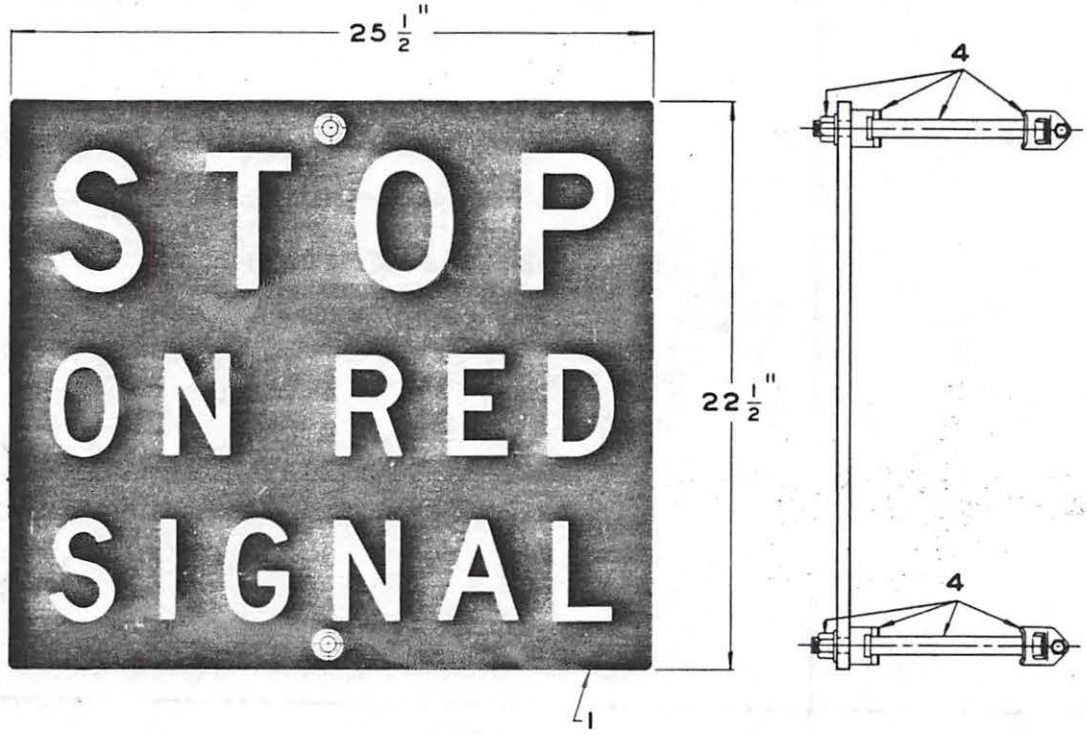

Ref. D

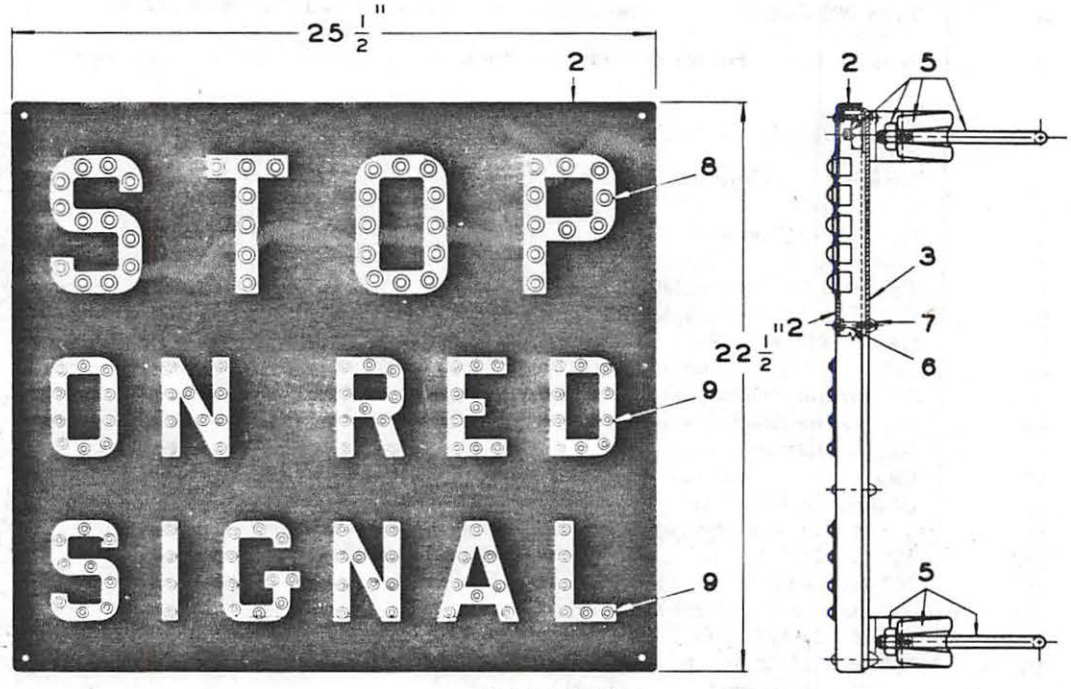

Ref. D1 & D2

Parts for Type A-479-A
Flashing Light Highway Crossing Signals

"STOP ON RED SIGNAL" SIGN

Ref. D

Ref. D1 & D2

Type 3366 "Stop on Red Signal" sign, Reflex-Reflecting Sheet type is on an aluminum plate. White letters on black background. Stainless steel strapping is used for mounting the sign on the pole.

Type 3366 "Stop on Red Signal" sign, Synthetic Baked Enamel, embossed steel front plate with front entrance clear reflector units and telescoping steel back. The screws and nuts are theft-resisting type. White letters on black background. Adaptor clamps and "U" bolts are used for mounting the sign on the pole.

Ref.	Description	Piece No.
D	Type 3366 "Stop on Red Signal" sign. Reflex-Reflecting sheet type on aluminum plate with stainless steel strap kit complete for mounting on 4" or 5" I.D. pipe mast	3366-7
D1	Type 3366 "Stop on Red Signal" sign with synthetic baked enamel finish and adaptor clamp kit complete for mounting on 4" I.D. pipe mast	3366-4
D2	Same as Ref. D1 but for 5" I.D. pipe mast	3366-4A
	REPLACEMENT PARTS	
1	"Stop on Red Signal" aluminum plate only for Ref. D	3366-710
2	"Stop on Red Signal" sign, synthetic baked enamel finish, for Ref. D1 & D2	3366-4L
4	Stainless steel strap mounting kit complete for one sign (specify pipe size)	3364-70
5	U-bolt for 4" I.D. pipe	3364-2
5A	U-bolt for 5" I.D. pipe	3364-5
6	3/16"-24 x 1⅜" lg. stl. carriage bolt, (cad. pl.)	
7	3/16"-24 Theftproof nut	3380-27X
8	No. 3F Plastic Reflector unit, clear	
9	No. 5F Plastic Reflector unit, clear	

WESTERN-CULLEN-HAYES, Inc.

Parts for Type A-479-A
Flashing Light Highway Crossing Signals

NUMBER OF TRACKS SIGN

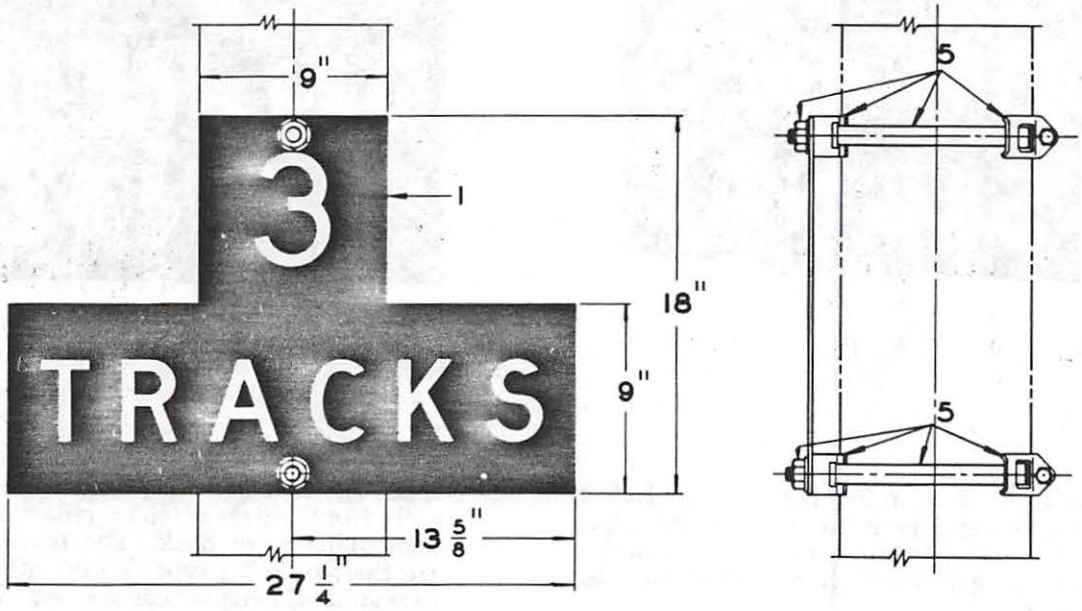

Ref. H

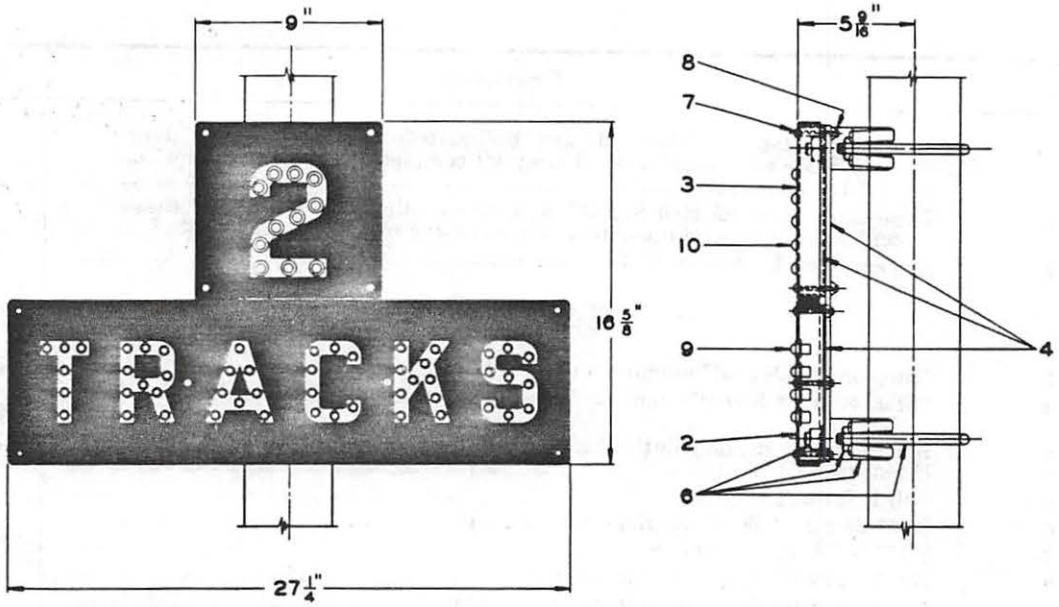

Ref. H2

Parts for Type A-479-A
Flashing Light Highway Crossing Signals

NUMBER OF TRACKS SIGN

Ref. H

Ref. H2

Type 3368 Number of Tracks Sign Reflex-Reflecting Sheet type is on an aluminum plate with white letters on black background, or black letters on white background. Stainless steel strapping is used for mounting the sign on the pole.

Type 3368 Number of Tracks Sign with Synthetic baked enamel; embossed steel front plate with front entrance clear reflector buttons and telescoping steel back. All the screws and nuts are stainless steel, theft-resisting type. White letters on black background. Adaptor clamps and "U" bolts are used for mounting the sign on the pole.

The Vitreous Enamel finish sign is the same as the Synthetic but does not have embossed letters.

Specify numeral required.

Ref.	Description	Piece No.
H	Type 3368 Number of Tracks Sign, Reflex-Reflecting sheet type on aluminum plate with white letters on black background and stainless steel strap kit complete for mounting on 4" or 5" I.D. pipe mast. (Specify numeral required.)	3368-7
H1	Same as Ref. H, but with black letters on white background	3368-7C
H2	Type 3368 Number of Tracks Sign, Synthetic Baked Enamel finish, and adaptor clamp kit complete for mounting on 4" I.D. pipe mast. (Specify numeral required.)	3368-4
H3	Same as Ref. H2, but for 5" I.D. pipe mast	3368-4A
H4	Type 3368 Number of Tracks Sign, Vitreous Enamel finish, and adaptor clamp kit complete for mounting on 4" I.D. pipe mast. (Specify numeral required.)	3368-3
H5	Same as Ref. H4, but for 5" I.D. pipe mast	3368-3A
	REPLACEMENT PARTS	
1	Number of Tracks aluminum plate only, white letters on black background. (Specify numeral required.)	3368-710
1A	Same as Ref. 1 but black letters on white reflecting background	3368-710C
2	"Tracks" front plate, synthetic baked enamel finish for Ref. H2 and H3	3368-27D
2A	Same as Ref. 2 but vitreous enamel for Ref. H4 and H5	3368-27C
3	Numeral front plate synthetic baked enamel finish for Ref. H2 and H3. (Specify numeral required.)	3368-32D
3A	Same as Ref. 3 but vitreous enamel for Ref. H4 and H5	3368-32C
4	Stainless steel strap mounting kit, complete for one sign. (specify pipe size)	3364-70
5	U-bolt for 4" pipe	3364-2
6	U-bolt for 5" pipe	3364-5
7	3/16"-24 x 1⅜" lg. stl. carriage bolt, (cad. pl.)	
8	3/16"-24 theftproof nut	3380-27X
9	No. 5F Plastic Reflector unit, clear	
10	No. 3F Plastic Reflector unit, clear	

Parts for Type A-479-A
Flashing Light Highway Crossing Signals

"RAILROAD CROSSING" SIGN

Ref. J

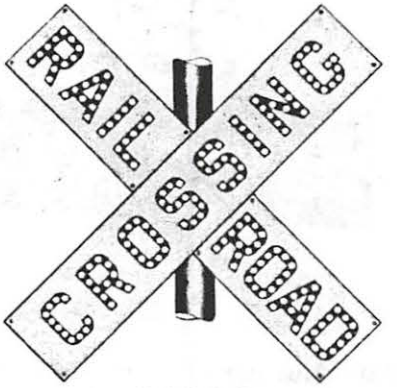

Ref. J1 & J3

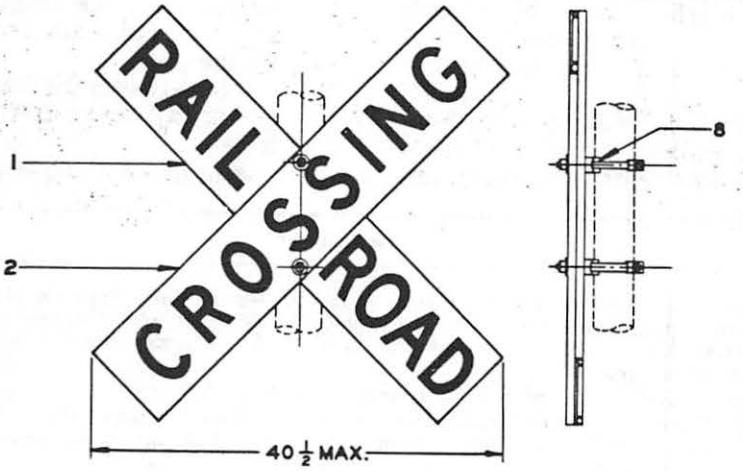

Ref. J

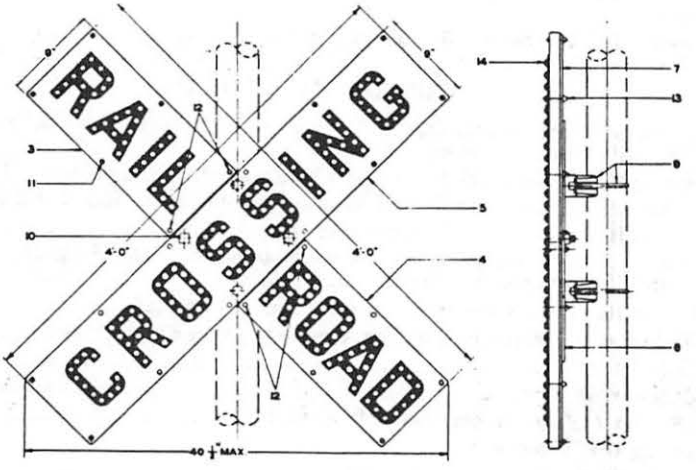

Ref. J1 & J3

Parts for Type A-479-A
Flashing Light Highway Crossing Signals

"RAILROAD CROSSING" SIGN

Type 3380 Railroad Crossing Sign, Reflex-Reflecting Sheet Type is on extruded aluminum, with black letters on white reflecting background. Stainless steel strapping is used for mounting the sign on the pole.

Type 3380 Railroad Crossing Sign, Synthetic baked enamel, embossed steel front plate, with front entrance clear reflector units and telescoping steel back. All the screws and nuts are theft-resisting type. Black letters on white background. Adaptor clamps and "U" bolts are used for mounting the sign on the pole.

The Vitreous Enamel finish sign is the same as the Synthetic, but does not have embossed letters.

Type 3252 Railway Crossing Sign is furnished on extruded aluminum only, with black letters on white reflecting background.

Ref.	Description	Piece No.
J	Type 3380 "Railroad Crossing" Sign, Reflex-Reflecting sheet type on extruded aluminum plate with stainless steel strap kit complete for mounting on 4" or 5" I.D. pipe mast	3380-7
J1	Type 3380 "Railroad Crossing" Sign, Synthetic Baked Enamel finish, with adaptor clamp kit complete for mounting on 4" I.D. pipe mast	3380-4
J2	Same as Ref. J1, but for 5" I.D. pipe mast	3380-4A
J3	Type 3380 "Railroad Crossing" Sign, Vitreous Enamel finish, with adaptor clamp kit complete for mounting on 4" I.D. pipe mast	3380-3
J4	Same as Ref. J3, but for 5" I.D. pipe mast	3380-3A
J5	Type 3252 "Railway Crossing" sign, Reflex-Reflecting sheet type on extruded aluminum plate with stainless steel strap kit complete for mounting on 4" or 5" I.D. pipe mast	3252-7
	REPLACEMENT PARTS	
1	"RAILROAD" Plate, Reflex-Reflecting sheet on extruded aluminum for Ref. J only	3380-710R
1A	Same as Ref. 1, but "RAILWAY" Plate, for Ref. J5 only	3252-710R
2	"CROSSING" Plate, Reflex-Reflecting sheet on extruded aluminum for Ref. J and J5	3380-710C
3	"RAIL" Front Plate, synthetic baked enamel finish, complete with reflector units for Ref. J1 and J2 only	3380-14C
3A	Same as Ref. 3, but vitreous enamel finish	3380-14A
4	"ROAD" Front Plate, synthetic baked enamel finish, complete with reflector units for Ref. J1 and J2 only	3380-15C
4A	Same as Ref. 4 but vitreous enamel finish	3380-15A
5	"CROSSING" Front Plate, synthetic baked enamel finish, complete with reflector units for Ref. J1 and J2	3380-16C
5A	Same as Ref. 5, but vitreous enamel finish	3380-16A
8	Stainless Steel Strap Kit, complete for one sign (specify pipe size)	3364-70
9	U-bolt for 4" I.D. pipe	3364-2
9A	U-bolt for 5" I.D. pipe	3364-5
10	5/8"-11 x 1¼" lg. sq. hd. mach. bolt	
11	3/16"-24 x 1¼" lg. carr. bolt, brass	
12	3/16"-24 x 1½" lg. carr. bolt, brass	
13	3/16"-24 Theft-Proof Nut, brass	3380-27X
14	No. 3F Plastic Reflector units, clear	
15	Key for theftproof nut, steel (not illustrated)	3380-27K

WESTERN-CULLEN-HAYES, Inc.

Marker Lights for Highway Crossing Signals

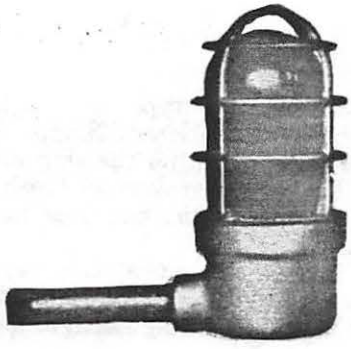

Ref. A

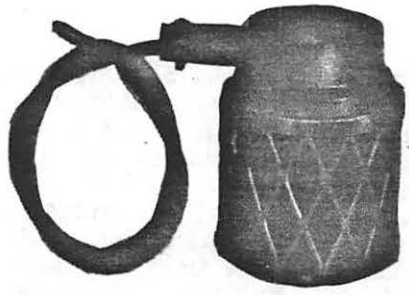

Ref. B

The various Marker Lights are intended for use where Crossing Signals are, of necessity, mounted close to the curb-line or on center-of-street islands. Except Type 1585-80, they are supplied with Red or Yellow glassware, as specified.

Ref.	Description	Piece No.
A	Type 675 Marker Light, with Medium Screw Base lamp receptacle and Red Globe	675-R
A1	Same as Ref. A, but with yellow globe	675-A
B	Type 1585-80 Marker Light, with Single Contact, Bayonet Base, lamp receptacle and Red, Fresnel, Lens	1585-80R
B1	Same as Ref. B, but with clear lens	1585-80C
	REPLACEMENT GLASSWARE	
1	Red Globe for Type 675 Marker Light	90801-1R
1A	Yellow Globe for Type 675 Marker Light	90801-1Y
2	Red Fresnel Lens	1575-11P

Supporting Brackets
Type 3565-267 and Type 3567-367

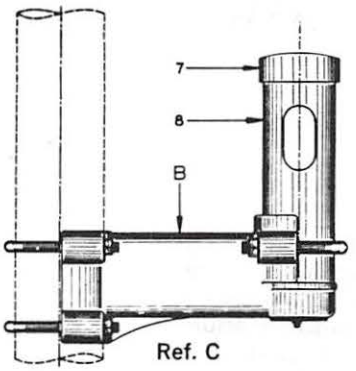

Ref. C

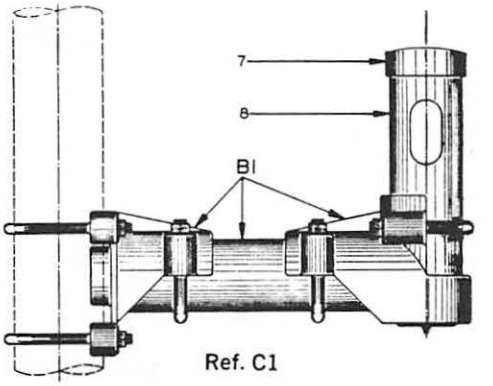

Ref. C1

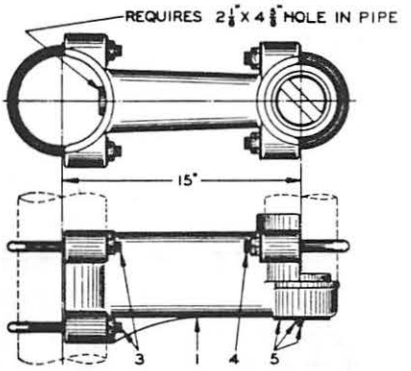

Ref. B

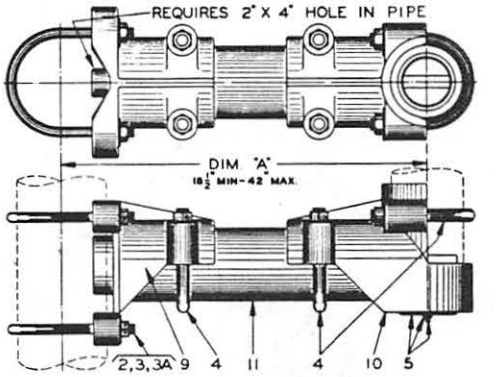

Ref. B1

For mounting Crossing Signal Light Units, with standard Junctionbox Crossarms, at one side of the mast, as necessitated by obstructions to the view, or for mounting extra light units for warnings along side-roads, etc.

The Type 3565-367 Supporting Bracket is of cast iron, designed for mounting on 5" mast, and provides a 15" offset of the dowel mast.

The Type 3565-267 Supporting Bracket consists of castings and a length of 4" I.D. pipe, which may be varied in length, to provide an offset of the dowel mast, of 18½", minimum, up to 42", maximum. The inner bracket, with appropriate "U" Bolts, will fit 4", 5" or 6" I.D. pipe.

Either One-way or Two-way Indication Light Assemblies may be mounted on the dowel masts, which can be turned in the socket to any desired angle.

Ref.	Description	Piece No.
B	Supporting Bracket Assembly, Less Dowel Mast	3565A-67
B1	Supporting Bracket Assembly, Less Dowel Mast. (Specify Dimension "A" and diameter of signal mast.)	3565A-167
C	Supporting Bracket and Dowel Mast Assembly	3565A-367
C1	Supporting Bracket and Dowel Mast Assembly. (Specify Dimension "A" and diameter of signal mast)	3565A-267
	REPLACEMENT PARTS	
1	Bracket only	3565-69
2	"U" Bolt, for 4" I.D. Pipe Mast	1264-4
3	"U" Bolt, for 5" I.D. Pipe Mast	1264-5
3a	"U" Bolt, for 6" I.D. Pipe Mast	1264-6
4	"U" Bolt, for 4" I.D. Pipe Extension or Dowel Mast	3565-163
5	Cover and Clamp, for wire opening	3565-162A
7	Pinnacle, for 4" I.D. Pipe	110A-6
8	Dowel Mast, 4" I.D. x 14" long, or length as specified	714-8
9	Inner Support, Casting only	3565A-168
10	Outer Support, Casting only	3565A-166
11	Extension Pipe, 4" I.D. x length as required	

"No Turn" Signals
Type A457 and Type A534

Signals of this type are often used in conjunction with Flashing Light Signals at locations where the use of additional Lights on the signal mast would not provide suitable added protection. Their use is the safest method of protecting street or highway traffic on roadways running parallel to the railroad without interfering with traffic not crossing the tracks.

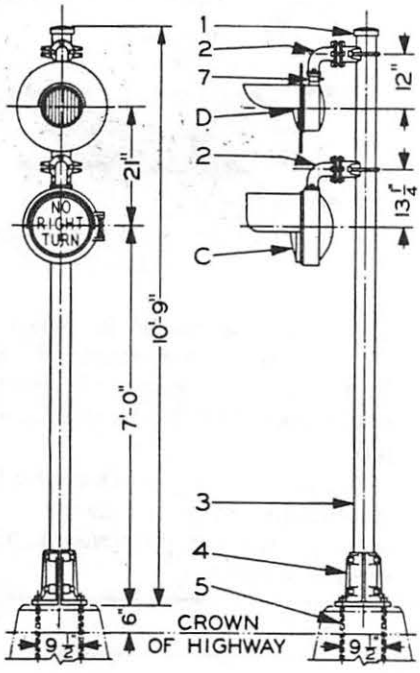

Ref. A

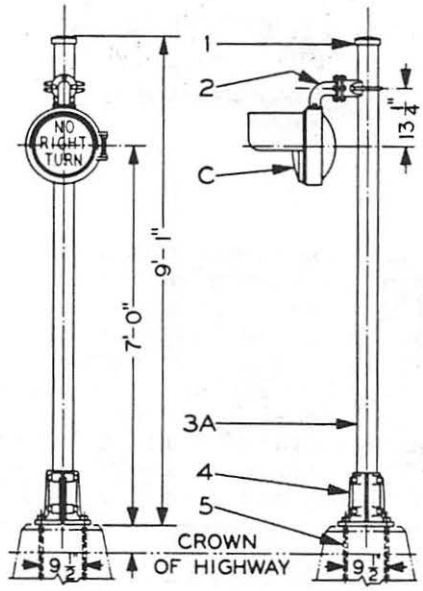

Ref. B

NOTE:
1 — For ordering references for these signals and components see following page.
2 — For ordering references for replacement parts for Yellow Light Unit see Page 1-17 in this Catalog Section.
3 — Replacement Parts List for NO TURN Sign will be furnished on request.
4 — The No Turn Light Unit will be furnished with other legend, as may be required, stenciled on inner glass.

"No Turn" Signals
Type A457 and Type A534

Ref.	Description	Piece No.
A	"NO LEFT TURN" Signal with Yellow Flashing Light Unit, Pole, Base, Pinnacle and Anchor Bolts	A457L
A1	Same as Ref. A but, "NO RIGHT TURN"	A457R
A2	Same as Ref. A but, "NO TURN"	A457N
B	"NO LEFT TURN" Signal with Pole, Base, Pinnacle and Anchor Bolts	A534L
B1	Same as Ref. B but, "NO RIGHT TURN"	A534R
B2	Same as Ref. B but, "NO TURN"	A534N
C	"NO LEFT TURN" Sign with Adaptor Bracket and "U" Bolt	939-1L
C1	Same as Ref. C but, "NO RIGHT TURN"	939-1R
C2	Same as Ref. C but, "NO TURN"	939-1N
C3	"NO LEFT TURN" Sign, only, (without Bracket and "U" Bolt)	939-1LX
C4	Same as Ref. C3 but, "NO RIGHT TURN"	939-1RX
C5	Same as Ref. C3 but, "NO TURN"	939-1NX
D	Yellow Flashing Light Unit, with Adaptor Bracket and "U" Bolt	970-501Y
D1	Same as Ref. D but, without Bracket and "U" Bolt	970-201Y
	REPLACEMENT PARTS	
1	Pinnacle, for 4" I.D. Pipe Mast	110A-6
2	Adaptor Bracket with "U" Bolt, nuts and washers	939-51
3	Pipe Mast, 4" I.D. x 10'8" long, for A457 signal	714-21-3
3A	Pipe Mast, 4" I.D. x 9'0" long, for A534 sign	714-20-2
4	Split Base, for 4" I.D. Pipe Mast	14492A
5	Anchor Bolt, 1" x 24" long, with Hexagon Nut and Washer	11079-1
6	Transparent Outer Cover	221718
7	Adaptor for mounting Type 970-201Y Light Unit on Ref. 2	950-72B

NOTE:

1 — 10 Volt, 25 Watt, Single Contact, Bayonet Base, Electric Lamps, S-11 Bulb, having light center length of 1¼", are recommended for the NO TURN signs, but are not furnished unless specified on order.

2 — No Turn Sign and Yellow Flashing Light Unit mounting Brackets are furnished with "U" Bolts for 4" Pipe Mast, unless otherwise specified.

WESTERN-CULLEN-HAYES, Inc.

REPLACEMENT PARTS ONLY
(Manufacture Discontinued)

Type 950A-201 Crossing Signal Light Unit

(Single Contact, Bayonet Base, Receptacle)

All Castings in the Type 950A-201 Light Unit are Aluminum. Replacement parts of cast aluminum will be furnished. Aluminum and cast iron parts are physically interchangeable.

Sheet Aluminum Hoods and Backgrounds will be furnished on all orders.

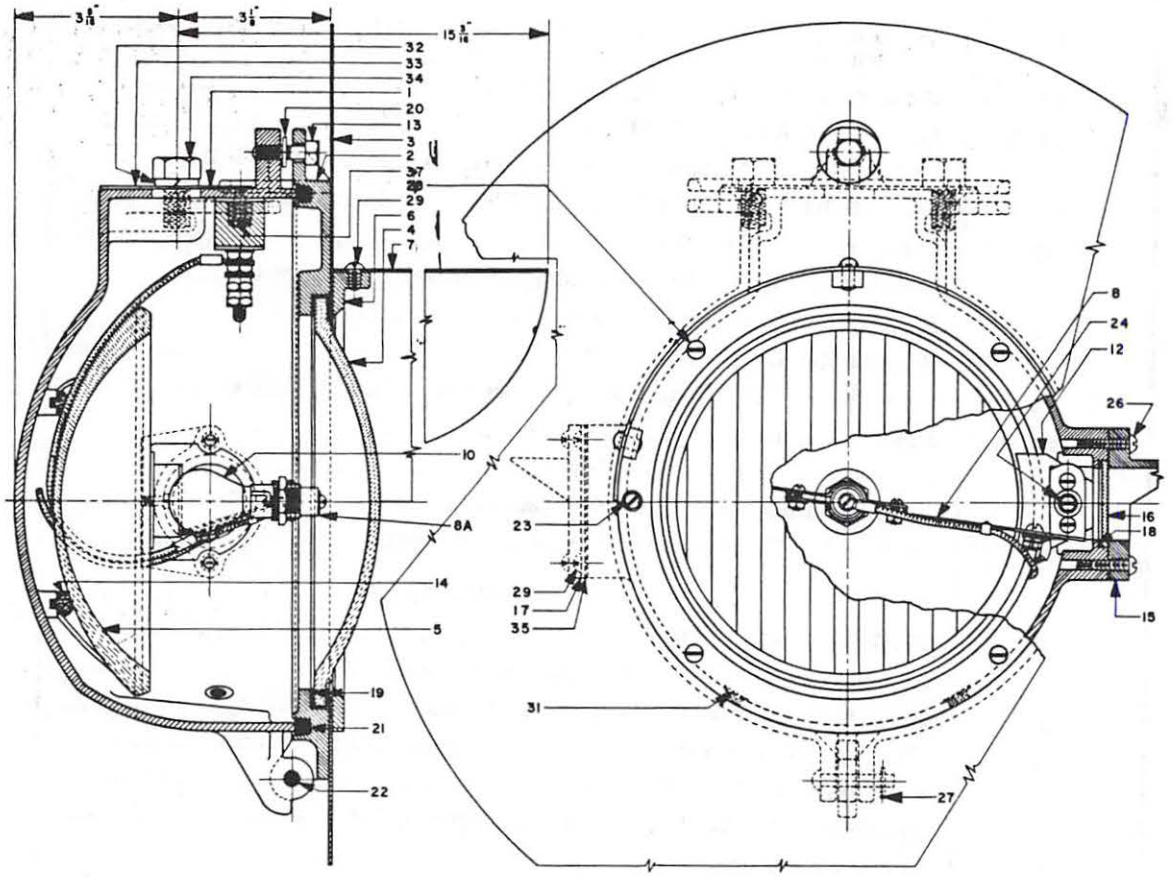

NOTE:
1 — For ordering references for replacement parts for this Light Unit see following page.
2 — For ordering references for replacement parts for the Older Style, Type 950-1, Light Unit see Plate D370 in Old Catalog Section D, Part No. 2.

REPLACEMENT PARTS ONLY

(Manufacture Discontinued)

Type 950A-201 Crossing Signal Light Unit

(Single Contact, Bayonet Base, Receptacle)

Ref.	Description	Piece No.
3	Background	950-13A
4	Roundel, (See listing Page 1-3)	
5	Mangin Mirror Reflector	822
6	Roundel Retaining Ring	802-1A
7	Hood	823-1A
8	Lamp Bracket and Receptacle, sub-assembly	950-250A
8a	Lamp Receptacle and Adjusting Nut, only	950-255
10	Single Contact, Bayonet Base Lamp, (Specify Voltage and Wattage)	
12	Reflector Retaining Plate	880-211
13	Cap Screw, 5/16" x 7/8" long, Hexagon Head, Steel	
13a	Cap Screw and Retaining Washer Assembly	950-270R
14	Reflector Pad	880-15
15	Side Light Hood	880A-23
16	Side Light Glass Disc	811
17	Side Light Blank Cover	801-3
18	Side Light Gasket	818-48
19	Roundel Gasket	825
20	Retaining Washer	950-270
21	Packing, for cover	880-18
22	Hinge Pin and Cotter	950-259A
23	Machine Screw, No. 10-32 x 1/2" long, Fillister Head, Brass	
24	Machine Screw, No. 10-32 x 3/8" long, Fillister Head, Brass	
25	Machine Screw, No. 10-32 x 5/8" long, Round Head, Brass	
26	Machine Screw, 1/4"-20 x 3/4" long, Round Head, Brass	
27	Cotter Pin, 3/32" x 5/8" long, Steel	
29	Machine Screw, 1/4"-20 x 3/8" long, Round Head, Brass	
31	Ventilator	818-49
32	Lock Washer, 1/2", Steel	
33	Gasket	950-17
34	Cap Screw, 1/2"-13 x 1 1/4", Hexagon Head, Steel	
35	Gasket	801-2

REPLACEMENT PARTS ONLY

(Manufacture Discontinued)

Junction Box Cross Arm For Mounting Type 950A-201 Crossing Signal Light Units

All castings in the Type 950A Junctionbox Crossarms are Aluminum. Replacement parts of cast aluminum will be furnished unless cast iron is specified. Aluminum and cast iron parts are physically interchangeable.

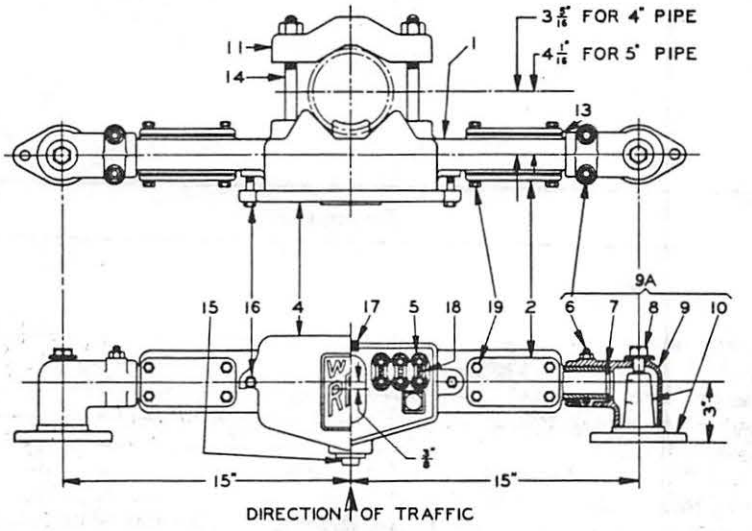

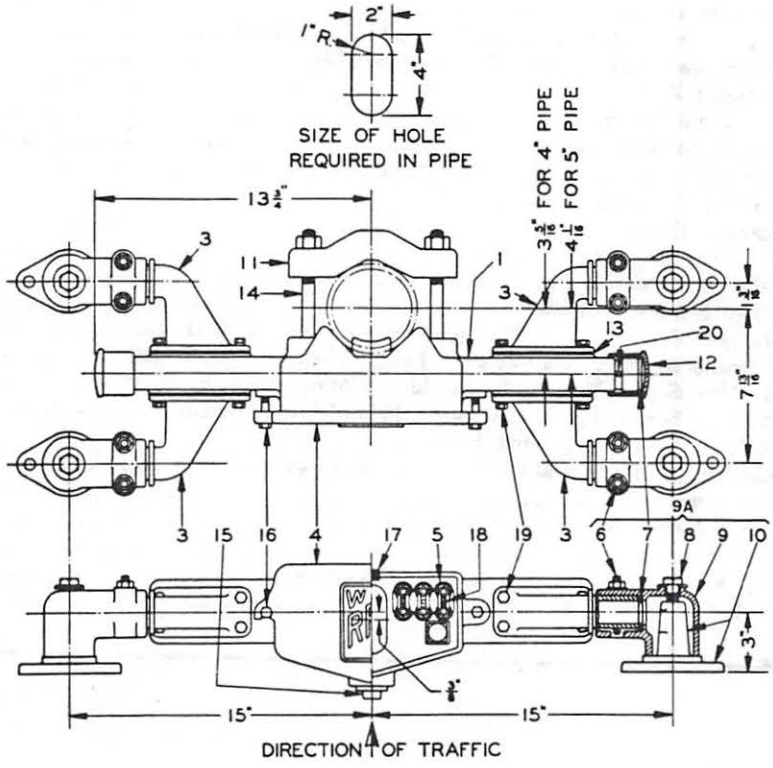

NOTE:
1 — For ordering references for replacement parts for these Junctionbox Crossarms see following page.

REPLACEMENT PARTS ONLY
(Manufacture Discontinued)

Junction Box Cross Arm For Mounting Type 950A-201 Crossing Signal Light Units

Ref.	Description	Piece No.
1a	Junction box, subassembly of references 1, 4, 5, 15, 17, and 18	950A-62
2	Cover Plate	950A-39
3	Bracket, 3½" extension	950A-57
4	Cover, with packing	950A-21
5	Terminal Block, complete, 6 binding posts	2506-106
6	"U" Bolt, complete with nuts	950-31
7	Gasket, sponge rubber	950-28
8	Bolt, complete with cupped washer	950-33
9	Supporting Bracket, casting only	950A-30
9a	Supporting Bracket, sub-assembly of references 6 to 10 inc	950A-63
10	Light Unit Support	950A-32
11	Adaptor Clamp	950A-34
12	End Cap, with set screw and gasket	950A-29A
13	Gasket, cork	950-27
14	Machine Bolt, with hexagon nut, ⅝"-11 x 6" long, for mounting junctionbox crossarm on 4" I.D. Pipe	
14a	Machine Bolt, with hexagon nut, ⅝"-11 x 7½" long, for mounting junction-box crossarm on 5" I.D. Pipe	
14b	Machine Bolt, with hexagon nut, ⅝"-11, curved, for mounting junctionbox crossarm on 6" I.D. Pipe	3364-37
14c	Machine Bolt, with hexagon nut, ⅝"-11, curved, for mounting junctionbox crossarm on 8" I.D. Pipe	3364-35
15	Pipe Plug, 1¼"	
16	Cap Screw, ⅜"-16 x 2" long, Hexagon Head, Steel	
17	Torchwick Packing, ⅜" diameter, 27" long	
18	Machine Screw No. 10-32 x ⅝" long, Fillister Head, Brass	
19	Cap Screw, ⅜"-16 x ⅞" long, Hexagon Head. steel, with plain washer	
20	Set Screw, ¼"-20 x ½" long, Square Head, Cup Point	

WESTERN-CULLEN-HAYES, Inc.

Suggested Designs for Concrete Foundations For Flashing Light Highway Crossing Signals

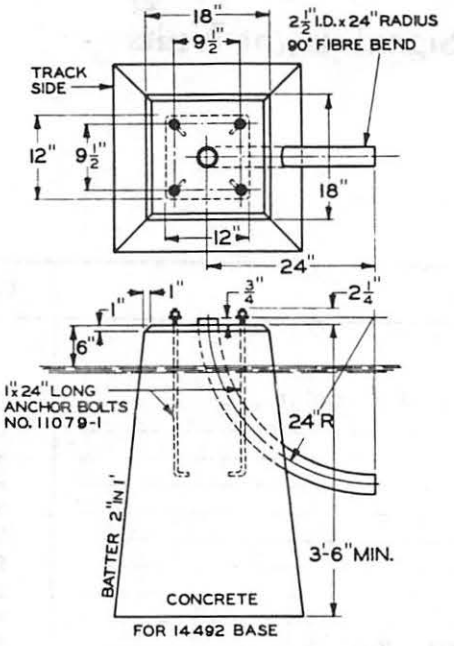

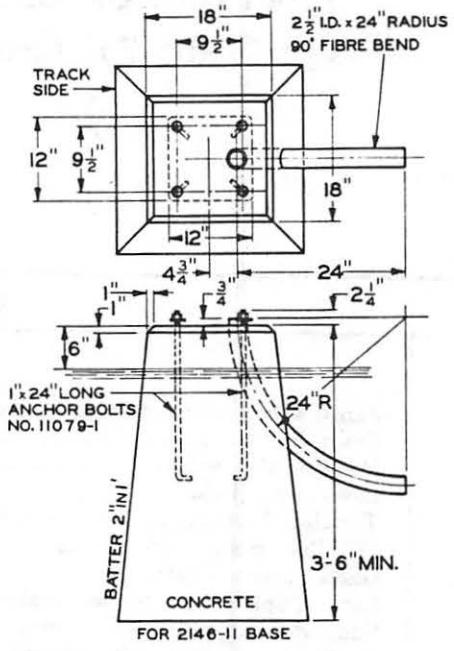

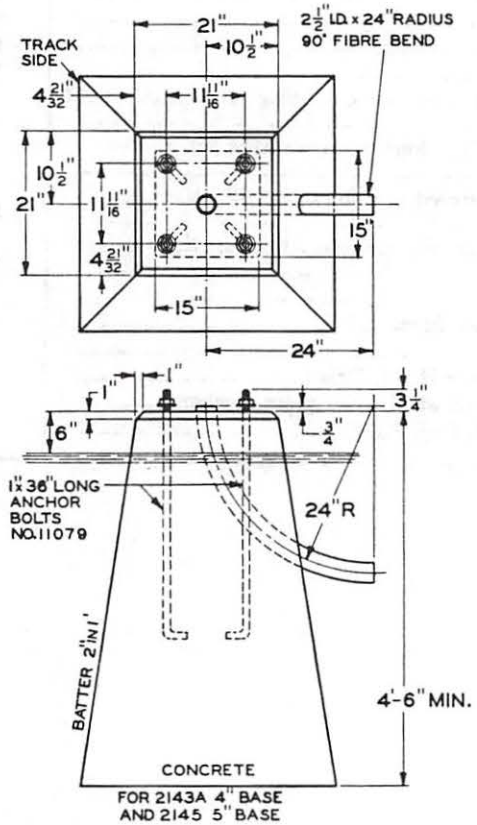

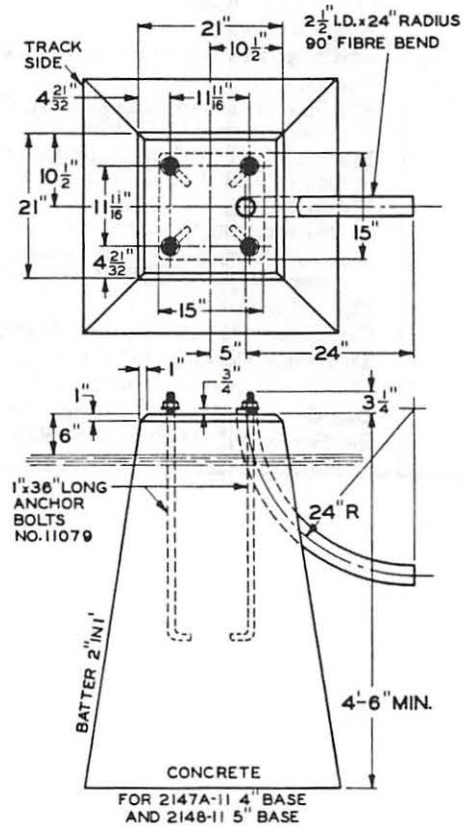

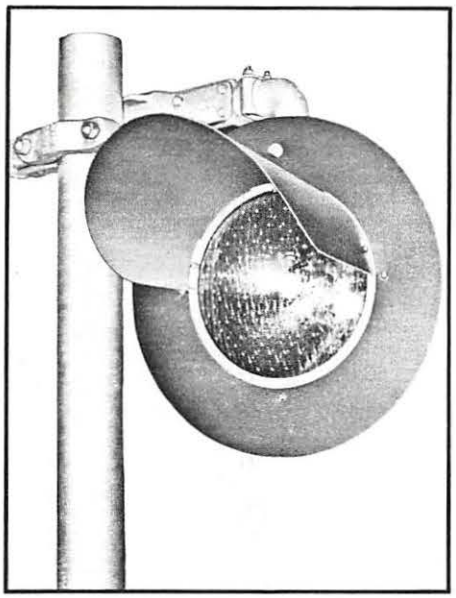

TYPE A-479A 12" FLASHING LIGHT HIGHWAY CROSSING SIGNAL with TYPE 975-201 LIGHT UNITS

GENERAL INFORMATION

Latest Improvements, Meet A.A.R. Specifications

The Flashing Light Highway Crossing Signals manufactured by Western-Cullen-Hayes represent the latest improvements in design. They meet all A.A.R. Specifications.

Arrangements To Suit Your Needs

This catalog illustrates the most popular arrangements of Flashing Light Signals and accessories, such as junction box-crossarm with two or four flashing light units for one-way or two-way indication. Other arrangements can be furnished to meet particular requirements.

Popular Arrangements

By far, the majority of Flashing Light type highway crossing signal installations require two flashing light signals, with two-way indication; one with a bell and one with a pinnacle. W-C-H's A-479A all aluminum assembly with 9½" x 9½" or 11 1/16" x 11 1/16" anchor bolt spacings and reflex-reflecting sheet type signs, will meet most requirements. The Type 0333 Bell is usually required. Plastic roundels having 20° horizontal spread and 10° downward deflection are furnished as standard. For other roundels see page 1-55.

Extra Indication Assemblies

Many locations require flashing light highway crossing signals with extra light assemblies to provide extra indication. Generally these lights are mounted 90 degrees to the right of and above the main lights as illustrated in references C, C1 and D on page 1-53. The extra lights may be mounted at any angle which may be specified. If "Stop On Red Signal" or number of tracks sign is required, it must be specified.

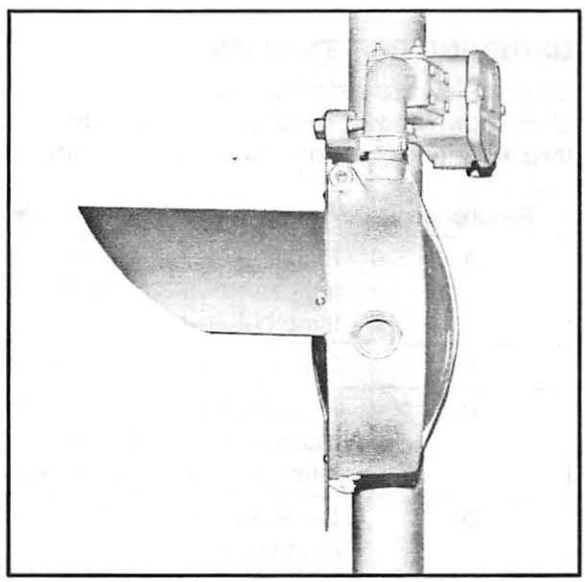

WESTERN-CULLEN-HAYES, Inc.
2700 West 36th Place • Chicago, Illinois 60632

TYPE A-479A 12" FLASHING LIGHT HIGHWAY CROSSING SIGNAL with TYPE 975-201 LIGHT UNITS

Popular Arrangements

Reference A

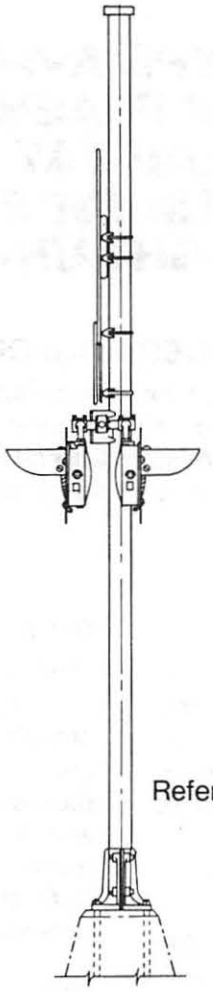

Reference A1

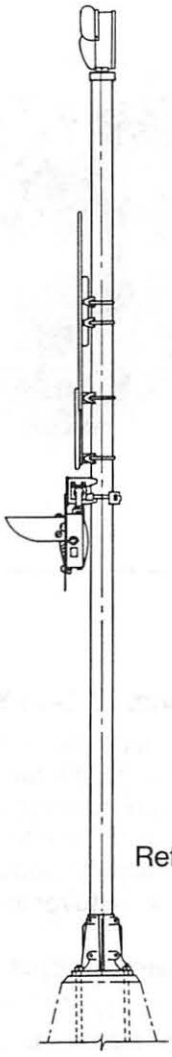

Reference B

ORDERING REFERENCES

Listed below are ordering references for assemblies shown above. Refer to catalog pages 1-10 thru 1-13 for details of mast and base components, pages 1-20 thru 1-25 for details of various signs and sign mounting kits and page 1-27 for support brackets.

Reference	Description	Piece No.
A	Flashing Light Highway Crossing Signal complete; two-way indication, with 0333 Bell. (Specify voltage and wattage of lamp bulbs, if required, and mast and base sizes)	A479AB
A1	Same as Ref. A, but with pinnacle in place of bell.	A479AP
B	Flashing Light Highway Crossing Signal complete; one-way indication, with 0333 Bell. (Specify voltage and wattage of lamp bulbs, if required, and mast and base sizes)	A479AB-1
B1	Same as Ref. B, but with pinnacle in place of bell. (Not shown)	A479AP-1

Extra Indication Assemblies

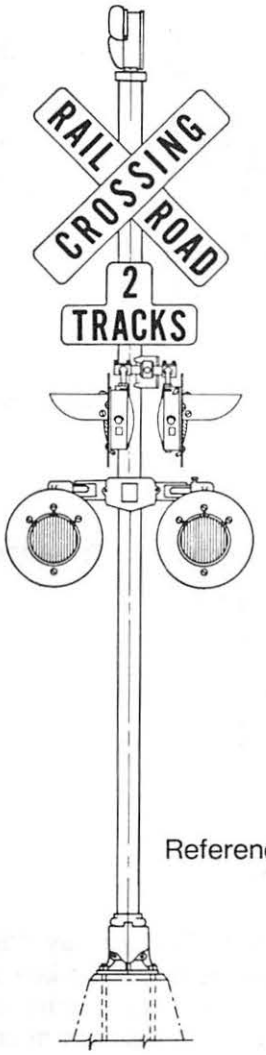

Reference C

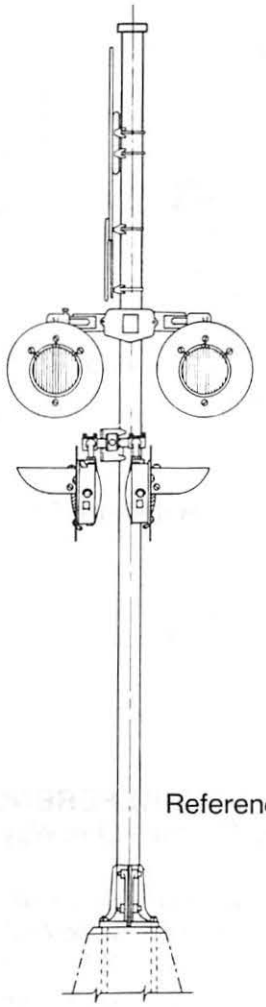

Reference C1

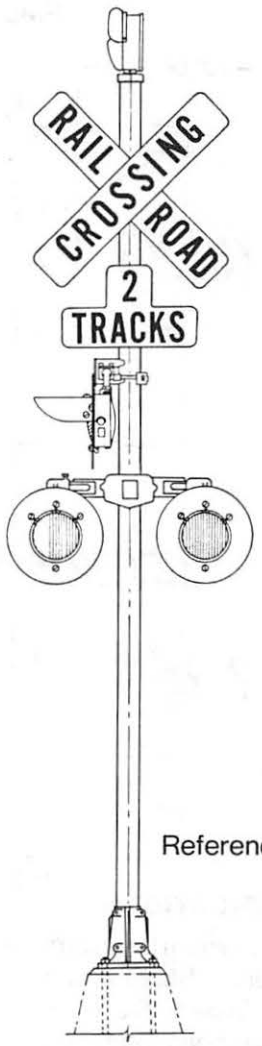

Reference D

ORDERING REFERENCES

Listed below are ordering references for assemblies shown above. Refer to catalog pages 1-10 thru 1-13 for details of mast and base components, pages 1-20 thru 1-25 for details of various signs and sign mounting kits and page 1-27 for support brackets.

Reference	Description	Piece No.
C	Flashing Light Highway Crossing Signal complete; two-way indication main lights, two-way indication extra lights mounted 90° to the right and 0333 Bell. (Specify voltage and wattage of lamp bulbs, and mast and base sizes)	A479AB-8
C1	Same as Ref. A, but with pinnacle in place of bell.	A479AP-8
D	Flashing Light Highway Crossing Signal complete; two-way indication main lights, with one-way indication extra lights mounted 90° to the right and 0333 Bell. (Specify voltage and wattage of lamp bulbs, and mast and base sizes)	A479AB-6
D1	Same as Ref. B, but with pinnacle in place of bell. (Not shown)	A479AP-6

WESTERN-CULLEN-HAYES, Inc.
2700 West 36th Place • Chicago, Illinois 60632

PARTS for TYPE A-479A 12" FLASHING LIGHT HIGHWAY CROSSING SIGNAL with TYPE 960 CROSSARM AND TYPE 975-201 LIGHT UNITS

TYPE 975-204-REFERENCE E
Flashing Light Signal—Two Way Indication

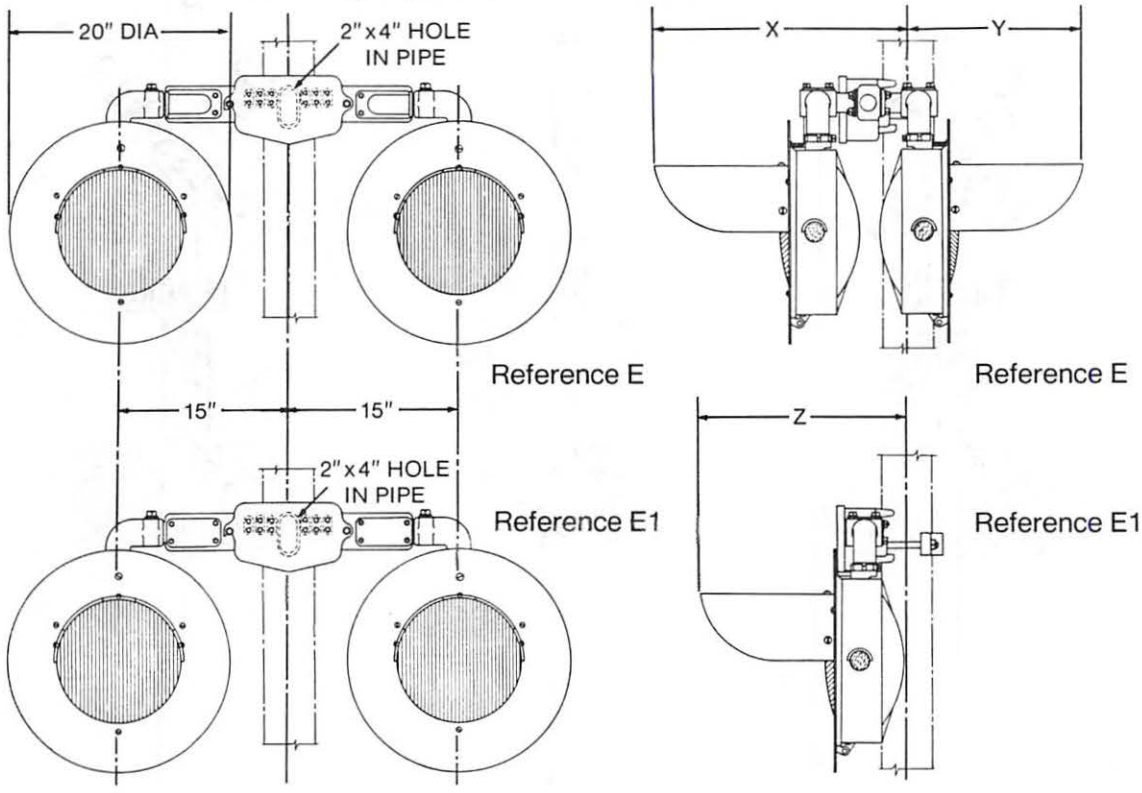

TYPE 975-202-REFERENCE E1
Flashing Light Signal—One Way Indication

SPECIFICATIONS

Cast Aluminum Crossarm, Brackets, Elbows and Light Units. Sheet Aluminum Backgrounds and Hoods. Type 975-201 Light Units are equipped with Parabolic Glass Reflectors, 12" diameter Red Roundels and Single Contact-Bayonet base receptacles positioned to accommodate S-8 or S-11 lamp bulb, having 1¼" light center length. See pages 1-18 and 1-19 for Crossarm component detail.

ORDERING REFERENCES

Reference	Description	Piece No.
E	Type 975 Flashing Light Unit Assembly with Type 960 Junction Box Crossarm For Two-Way indication with 4 Light Units. (Specify I.D. of pipe and roundels)	975-204
E1	Same as Ref. E, but one-way indication with 2 light units	975-202
E2	Type 975 Light Unit Only	975-201
E3	Type 960 Junction Box Crossarm for two-way indication. (Specify I.D. of pipe)	960-5
E4	Same as Ref. E3, but for one-way indication	960-3

SPECIFICATION TABLE FOR I.D. OF PIPE

Pipe Size	Dim. X	Dim. Y	Dim. Z
4" I.D.	27½"	21¼"	23"
5" I.D.	28¼"	20½"	24"
6" I.D.	28"	20"	24½"
8" I.D.	30¼"	18½"	25½"

ROUNDELS

Roundels furnished comply with appropriate sections of A.A.R. Signal Manual Parts 136 and 166. They are 12" diameter, red, with color meeting requirements of A.A.R. Signal Manual, Section 136. Type 5358 are recommended for general use.

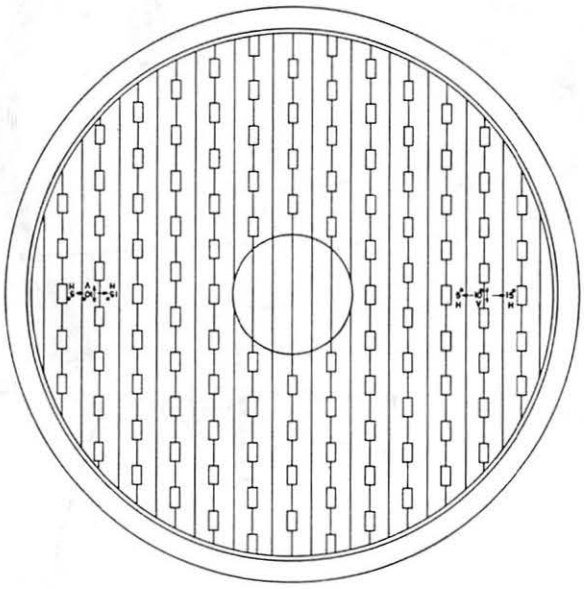

5358

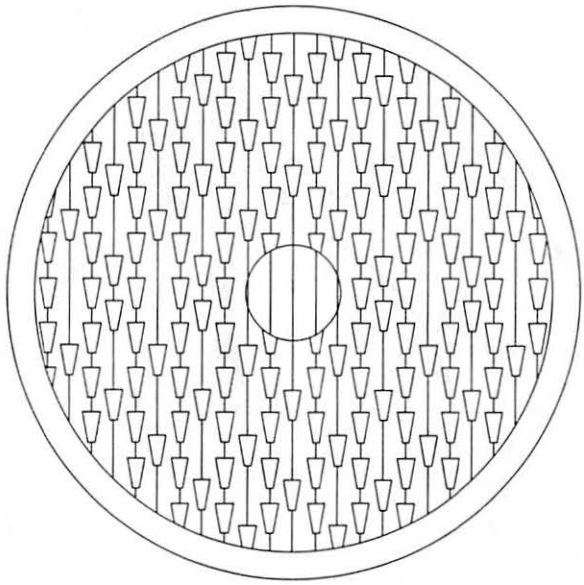

5368

SPECIFICATIONS

All 12" type roundels are made of high strength, impact resistant polycarbonate plastic.

ORDERING REFERENCES

Reference	Description	Piece No.
1	Type 5358 Roundel, 20 degree horizontal spread 10 degree down deflection, 2" Hot Spot	**5358**
2	Type 5368 Roundel, 20 degree horizontal spread 32 degree down deflection, 2" Hot Spot	**5368**
3	Type 5359 Roundel, 70 degree spread	**5359**
4	Type 5369 Roundel, 30 degree horizontal spread 15 degree down deflection	**5369**

WESTERN-CULLEN-HAYES, Inc.
2700 West 36th Place • Chicago, Illinois 60632

PARTS for TYPE A-479A
12" FLASHING LIGHT HIGHWAY CROSSING SIGNAL
with TYPE 975-201 LIGHT UNITS

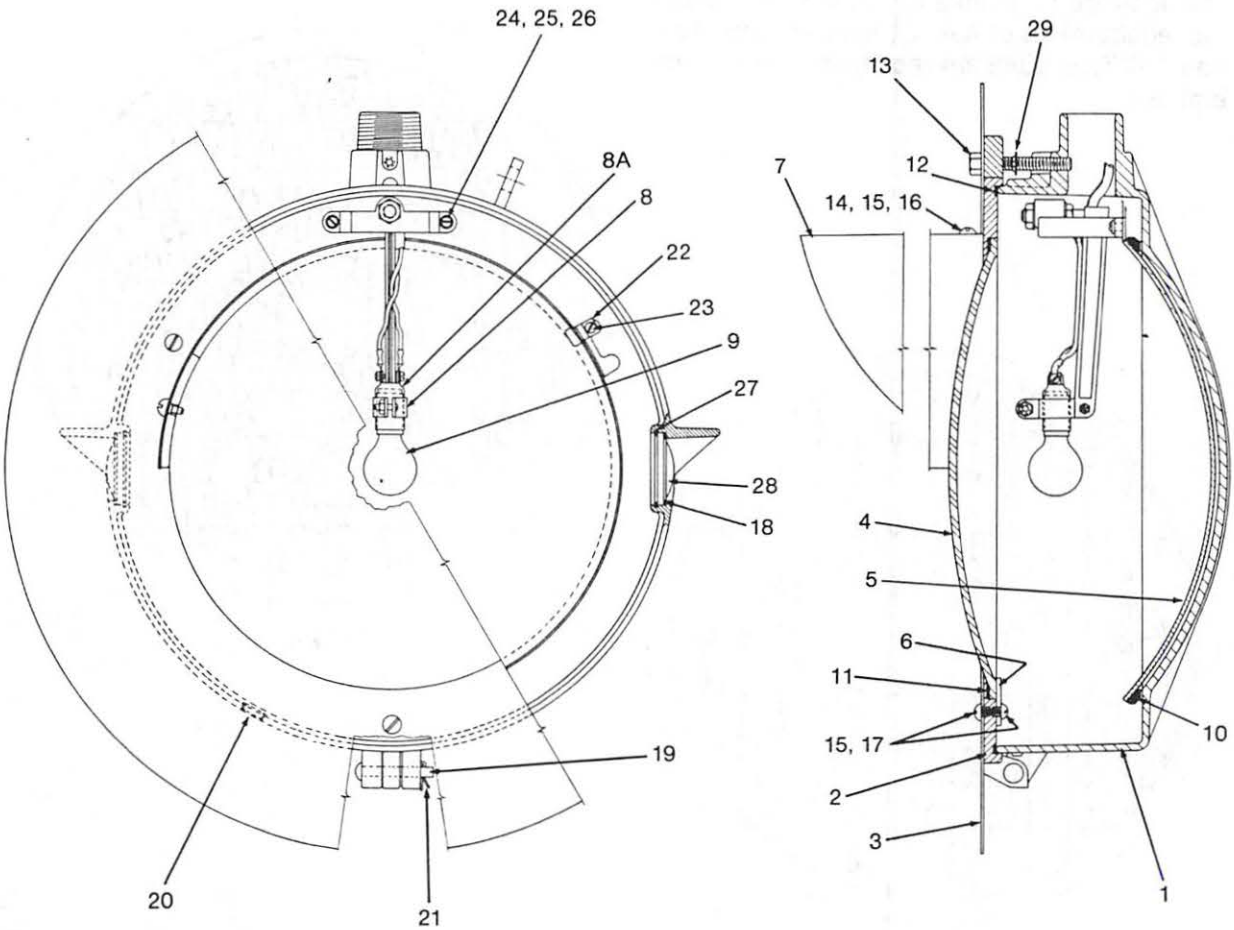

SPECIFICATIONS—12" FLASHING LIGHT UNIT

All castings in the Type 975-201 Light Unit are aluminum, with sheet aluminum hood and background.

ORDERING REFERENCES

Reference	Description	Piece No.
A	Type 975 Flashing Light Unit assembly, specify roundel desired and voltage and wattage of lamp, if required	975-201
	REPLACEMENT PARTS	
1	Case	975-1
2	Cover	975-2
3	Background	975-13
4	Roundel (See Page 1-55)	
5	Reflector	975-275C
6	Roundel Retainer	975-24
7	Hood	975-9
8	Lamp Bracket and Socket sub-assembly	975-20A
8A	Lamp Receptacle with insulating sleeve	
9	Electric Lamp (Specify voltage and wattage)	
10	Reflector Supporting Ring	975-16
11	Roundel Gasket	975-825
12	Door Packing	975-18
13	5/16" x 2¼" lg. Hex Hd. Cap Screw Stainless steel	
14	¼" x 20 x ½" lg. Rd. Hd. Mach. Screw	
15	¼" Internal Tooth Lock Washer	
16	¼"-20 Sq. Nut, brass	
17	¼"-20 x ¼" lg. Rd. Hd. Mach. Screw, brass	
18	Side Light Gasket	960-48
19	Hinge Pin	975-259
20	Ventilator	1265-6
21	3/32" x 5/8" lg. Cotter Pin	
22	Reflector Holding Clip	970-17
23	No. 8-32 x 3/8" lg. Rd. Mach. Screw	
24	No. 10-24 x ¾" lg. Rd. Hd. Mach. Screw	
25	No. 10 Plain Washer	
26	No. 10 Spring Lock Washer	
27	Retaining Ring	960-7S
28	Side Light Glass Disc	811
28A	Side Light Blank Plate	950A-261
29	Crescent Retainer	970-39

WESTERN-CULLEN-HAYES, Inc.
2700 West 36th Place • Chicago, Illinois 60632

NOTES

WESTERN-CULLEN-HAYES, Inc.
2700 West 36th Place • Chicago, Illinois 60632 • Telephone: 312/254-9600 • Telex 25-3206

WC STATIONARY (WALKOUT) CANTILEVERS

- Provides Significant Improvement in SIGNAL VISIBILITY AT GRADE CROSSINGS
- Signal maintenance is safer, easier, faster
- 2 types available, adjustable or fixed length arm
- Custom designs available

Meets AAR and AASHO Standards and Requirements*

*American Association of State Highway Officials

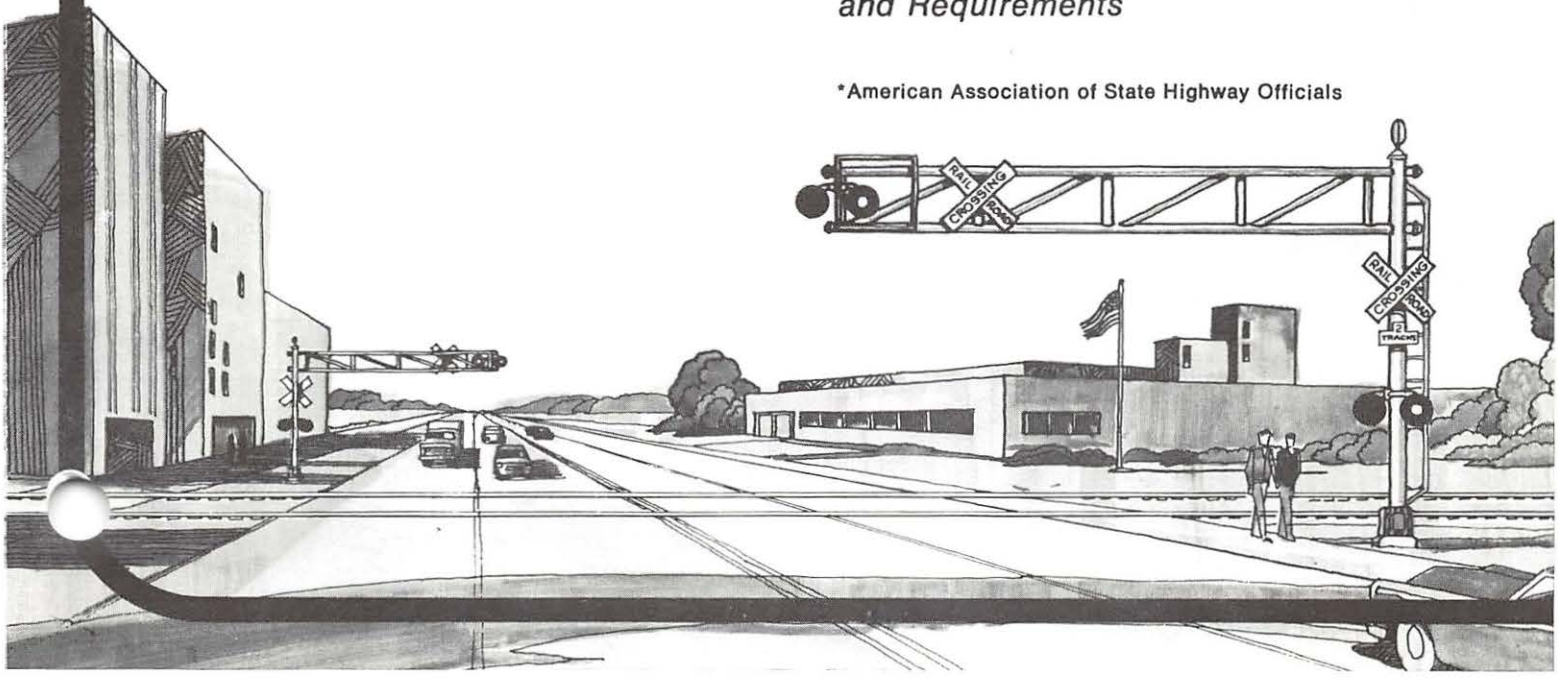

WC

Stationary (*Walkout*) Cantilevers improve grade crossing protection

- Flashing lights can be placed above traffic in direct view of the motorist
- 17 foot road clearance above top of foundation
- Railroad personnel can maintain equipment safely—without obstructing highway traffic. Special vehicles are not required.
- Minimum maintenance is required

Western-Cullen's Stationary Cantilevers are designed to meet the Standards of the American Association of State Highway Officials (AASHO) and exceed AAR requirements. These rugged cantilevers can withstand 100 mile per hour winds with gusts up to 130 MPH, ice loadings to 3 pounds per square foot and live loads of 500 pounds at the tip. All aluminum framing members are of 6061-T6 which is 25% stronger than materials normally used in railroad cantilevers.

Split base and junction box bases are of 356-T6 aluminum, the only type of alloy approved by AASHO. All welding is done by certified welders in accordance with ASME Boiler and Pressure Vessel Code, Section IX, Part B. Bolt spacing: 11-11/16″ x 11-11/16″. Anchor bolts: 1¼″ x 72″.

Service of equipment can be done quickly by railroad personnel working safely above the traffic. There is no need to tie up highways or employ specially equipped vehicles. Walkway arms and working platforms on cantilevers have non-slip safety grating to assure safe footing under adverse weather conditions. Where severe icing occurs frequently Grip Strut® safety grating can be provided. Hand rail and grab irons are included for added safety. Anti-climb guards are provided to prevent vandals from climbing the cantilever.

Single mast construction is used with arm lengths 8′ to 31′; double masts are used for 32′ to 40′ arms. Double mast spacing: 3′-0″.

Use of Western-Cullen's stationary cantilever provides improved locations for flashing light, directly in front of oncoming traffic. Highway safety and railroad safety is improved.

® Trade Mark U.S. Gypsum Co.

Fixed length Walkout Cantilever

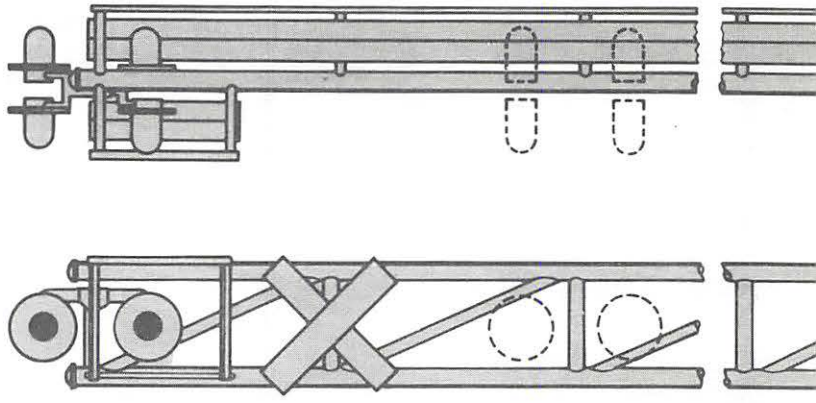

- Lower cost
- Welded construction
- Available in 1 ft. increments from 8 to 40 feet

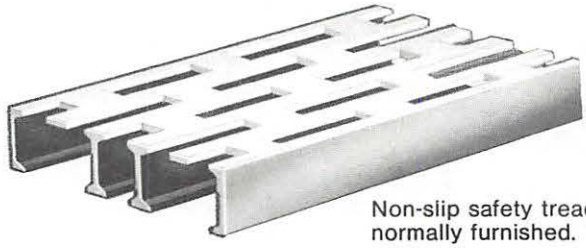

Non-slip safety tread grating normally furnished.

2 types of cantilevers are available to meet grade crossing protection requirements.

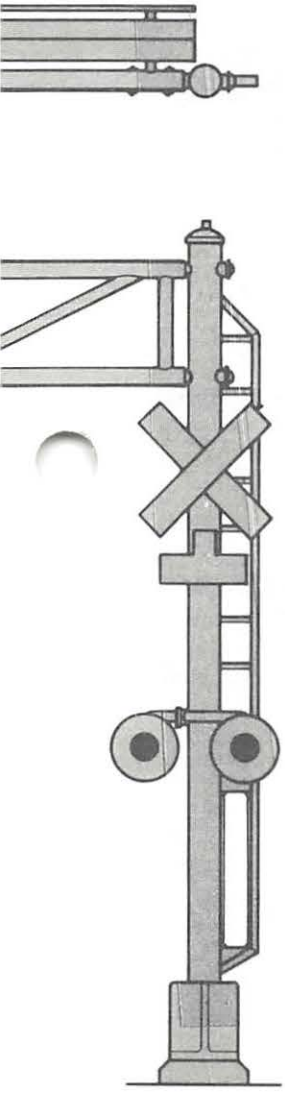

Trombone (adjustable) length Cantilever

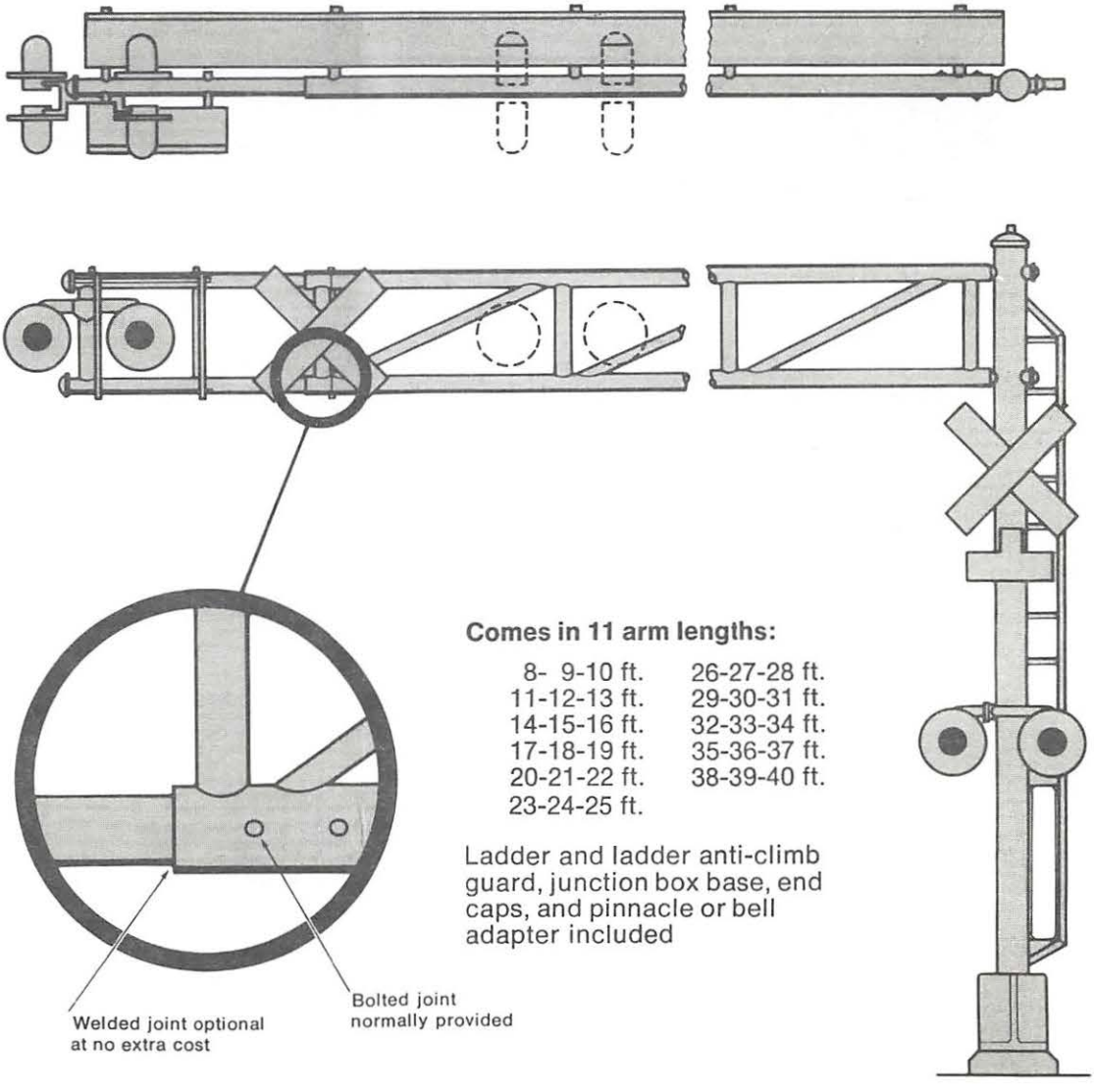

Comes in 11 arm lengths:

8- 9-10 ft.	26-27-28 ft.
11-12-13 ft.	29-30-31 ft.
14-15-16 ft.	32-33-34 ft.
17-18-19 ft.	35-36-37 ft.
20-21-22 ft.	38-39-40 ft.
23-24-25 ft.	

Ladder and ladder anti-climb guard, junction box base, end caps, and pinnacle or bell adapter included

Grip-Strut® Safety grating supplied for nominal extra charge.

Both types of available safety grating comply with OSHA requirements.

ORDERING INFORMATION

We suggest you copy this page and show required arm length, number and direction of lights, signs, bells and other devices.

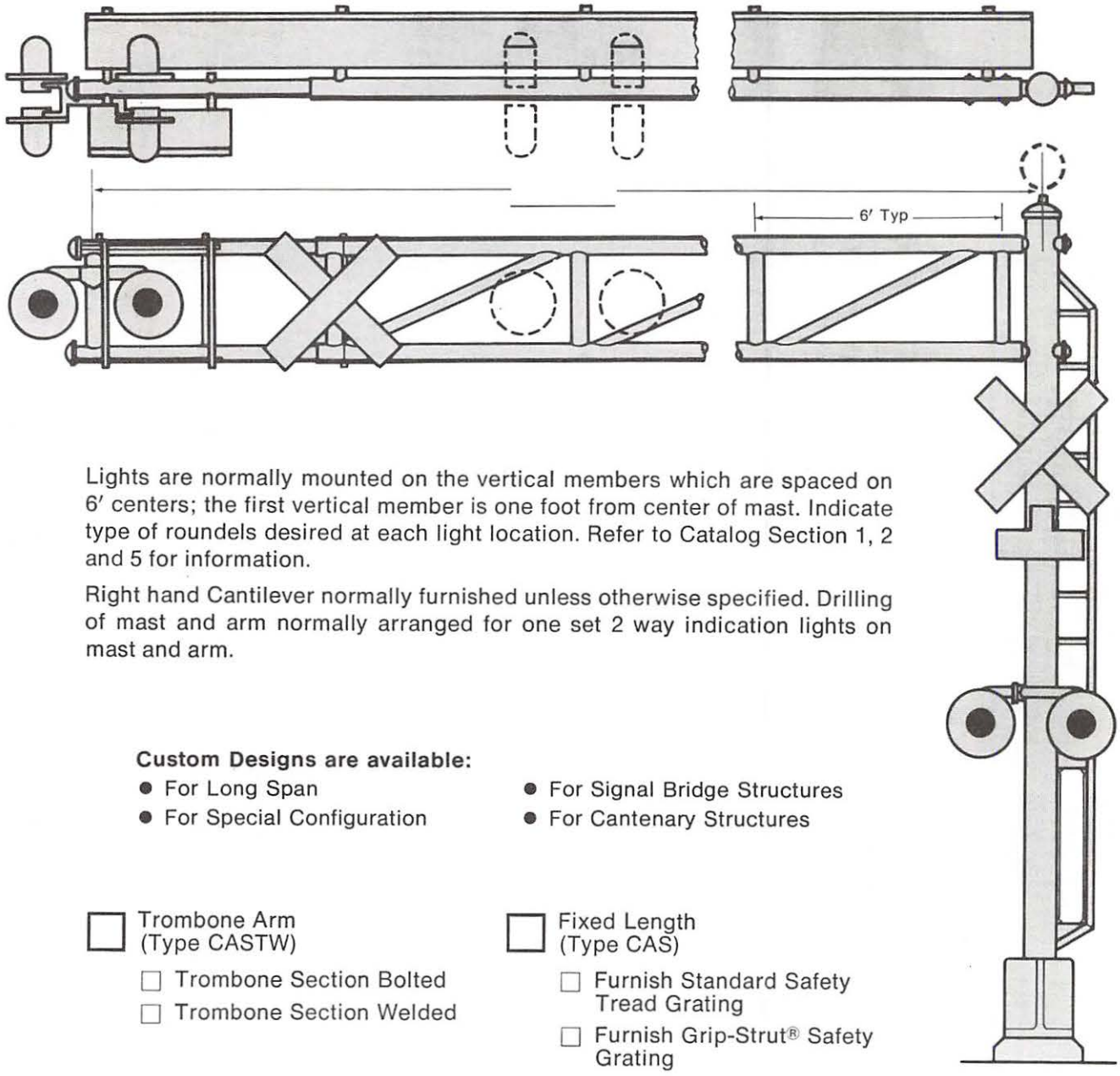

Lights are normally mounted on the vertical members which are spaced on 6′ centers; the first vertical member is one foot from center of mast. Indicate type of roundels desired at each light location. Refer to Catalog Section 1, 2 and 5 for information.

Right hand Cantilever normally furnished unless otherwise specified. Drilling of mast and arm normally arranged for one set 2 way indication lights on mast and arm.

Custom Designs are available:

- For Long Span
- For Special Configuration
- For Signal Bridge Structures
- For Cantenary Structures

☐ Trombone Arm (Type CASTW)

- ☐ Trombone Section Bolted
- ☐ Trombone Section Welded

☐ Fixed Length (Type CAS)

- ☐ Furnish Standard Safety Tread Grating
- ☐ Furnish Grip-Strut® Safety Grating

WC Hayes
WESTERN-CULLEN-HAYES, Inc.
2700 West 36th Place • Chicago, Illinois 60632 • Telephone: 312/254-9600 • Telex 25-3206

TYPE A 760

ALUMINUM
ROTATABLE CANTILEVER SIGNAL

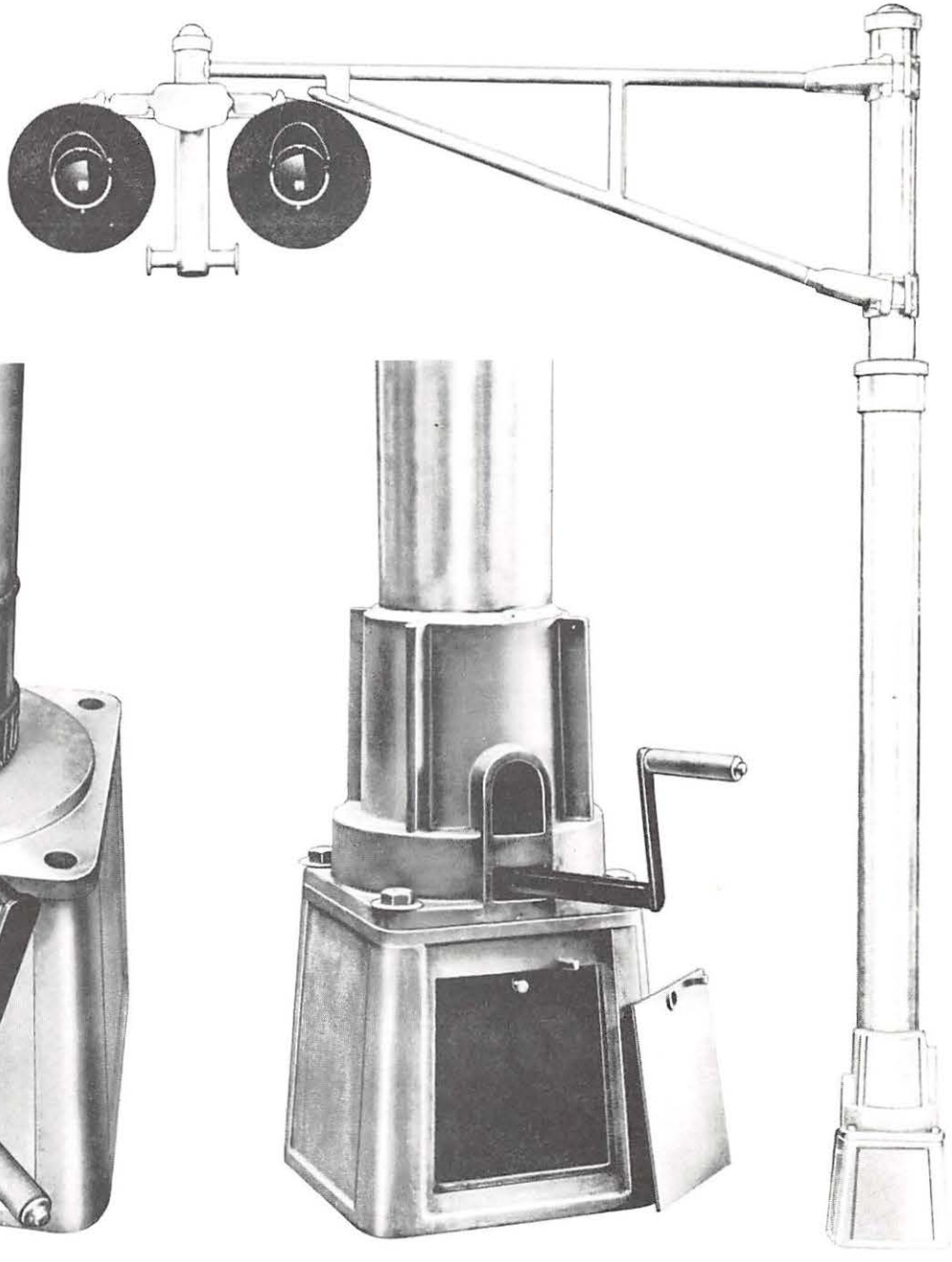

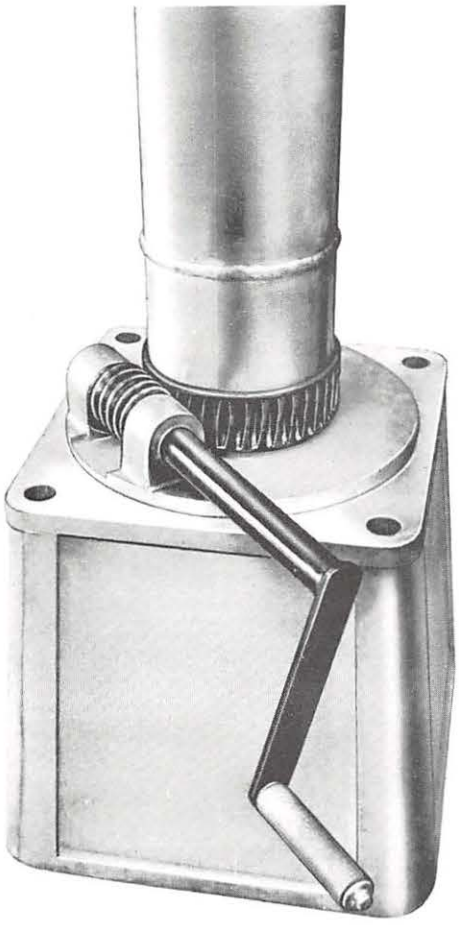

WC Hayes

WESTERN-CULLEN-HAYES, Inc.

2700 West 36th Place • Chicago, Illinois 60632 • Telephone: 312/254-9600 • Telex 25-3206

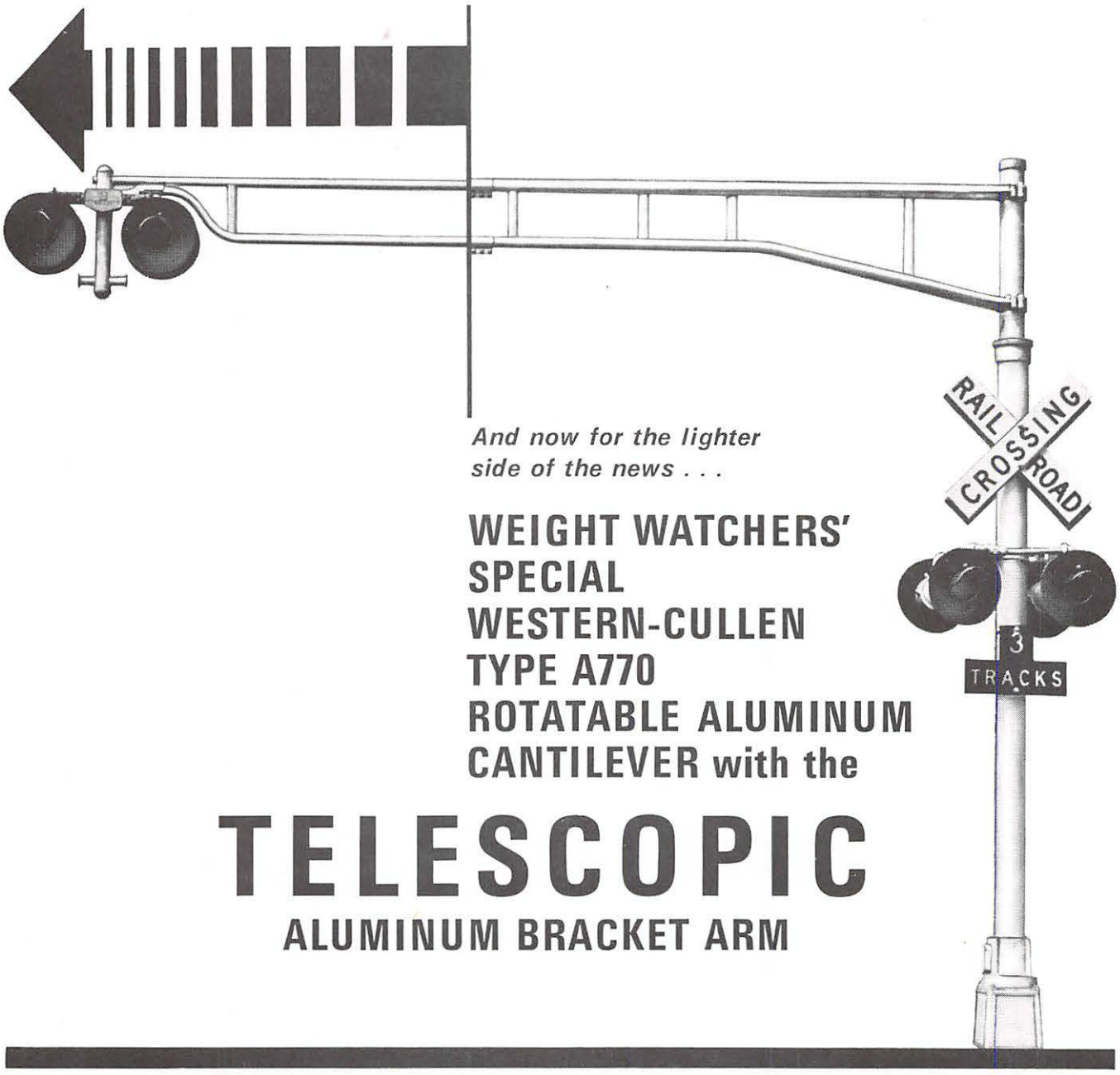

And now for the lighter side of the news . . .

WEIGHT WATCHERS' SPECIAL WESTERN-CULLEN TYPE A770 ROTATABLE ALUMINUM CANTILEVER with the

TELESCOPIC

ALUMINUM BRACKET ARM

Now a welcome addition to our Western-Cullen line of rotatable aluminum cantilevers to give you a wider choice of bracket arms!

Besides our current Cantilever Type A760, with the standard bracket arm (available in 12, 15 or 20 foot widths), we now have available Cantilever Type A770, with extendable bracket arm (adjustable to any length between 15 and 20 feet).

The bracket arm width is the only difference. Otherwise, both units have the same time-saving, ease of service features which include: release and turn of bracket arm to and fro off-highway position from gears at base; automatic, positive locking of bracket arm in fixed position for servicing, and many other features.*

These two Cantilever units—the Type A760 and the Type A770—give you a choice among the choice!

**Aluminum hook-on ladder available.*

SECTION 3

Automatic Crossing Gates

CONTENTS

	Page No.
General Information	3-2 to 3-7
Model 10 Highway Crossing Gate Signal Complete	3-8 to 3-12
Model 10 Highway Crossing Gate Signal Parts	
Roadway Arms	3-14 to 3-23
Sidewalk Arms	3-24 to 3-27
Hinged-Tongue Roadway Arms	3-28
Buffer Leg	3-29
Gate Lights	3-30 & 3-31
Gate Arm Supports	3-32
Mechanism Supports	3-33
Gate and Counterweight Arms	3-34 to 3-36
Junction Box Cross Arm	3-37 to 3-45
Junction Box Clamp Base	3-46 & 3-47
Supporting Brackets	3-48 & 3-49
Extension Brackets	3-50
Gate Mechanism 3567	3-101 to 3-111
Gate Mechanism 3568	3-115 to 3-125

WESTERN-CULLEN-HAYES, Inc.

2700 West 36th Place • Chicago, Illinois 60632 • Telephone: 312/254-9600 • Telex 25-3206

PRINTED IN U.S.A.

GENERAL

Model 10 Signals meet, in every respect, the specifications and requirements of the Association of American Railroads, Communication and Signal Section, and of every State having specifications or regulations applying to grade-crossing protection, as well as those of the Board of Transport Commissioners for Canada.

They are especially designed for automatic control by approaching trains and for manual supervision imposed upon automatic control.

Suggested circuits for the automatic control of Model 10 Signals are shown in the instruction booklets. These follow the principles and recommended practices of the Association of American Railroads, Communication and Signal Section, and embody the use only of relays and other devices meeting the specifications and requirements of that organization.

Contributing largely to the instant success of the automatic operation of the Model 10 Signal, when first introduced in June, 1936, was the provision of a prewarning by flashing lights for a period of 3 to 5 seconds before the gate arm starts to descend and the slow, even descent of the gate arm to the horizontal position in a period of 10 to 15 seconds. Even when these signals are manually controlled this prewarning period is retained. This allows ample time for highway traffic to pass the gate after the lights start to flash, or to come to a stop before reaching the gate.

The three electric lights on the gate arm provide an arrestive, highly visible horizontal row of lights in the path of approaching highway vehicles. At all times when the gate arm is in a position to obstruct traffic the tip light burns steadily and the other two lights are caused to alternately flash in unison with the flashing lights on the signal mast.

Many variations from the typical circuits are used to meet local conditions, including timing circuits to adjust the warning period to the speed of approaching trains and thus to limit the time the gates would be down for slower trains. Circuits are frequently introduced to prevent obstruction of highway traffic by trains standing near the crossing, as occurs during station stops.

Assistance in the design of control circuits to meet special conditions will be gladly given by our Engineers, upon request.

MODEL 10 SIGNALS

The Model 10 Signal assemblies, for which ordering reference data is given in this catalog section, are those most commonly used to meet the conditions encountered in the vast majority of locations. Special assemblies can be arranged to meet various unusual requirements. These may include extension brackets to position the flashing lights so as to project the light beams along side streets, or other necessary features required by the circumstances.

In standard Model 10 Signal assemblies the signs, flashing lights and mechanism are mounted on one 5 inch pipe mast with junction-box type base and a bell or pinnacle. Where cantilever type flashing light signals are required, the gate mechanism and gate arm are frequently mounted on a separate short mast located between the cantilever signal and the track, often on a common concrete foundation. However, where clearance does not permit this arrangement, assemblies with offset cantilever brackets are supplied.

Our Engineering Department is at all times glad to cooperate in the design of special assemblies to meet unusual conditions. Given scale plans or details of a crossings, where standard assemblies do not meet the requirements, we will furnish drawings illustrating the arrangement recommended.

MECHANISMS

Two types of mechanism are available for operation of roadway gate arms, as illustrated on Pages 3-8 & 3-9. Both Types 3567 and 3568 are designed to operate the gate arm to the clear, 90°, position by power and from the clear position to the 45° position, descending, by power and from the 45° position to the horizontal position by gravity. The characteristics and a full description of the mechanisms will be found in Instruction Booklet accompanying each mechanism.

Each of the above mechanisms may be had with a kit for the operation of a sidewalk arm. This sidewalk arm operating shaft and internal actuating parts is supplied as a kit, which can be easily installed.

All mechanisms are provided with auxiliary circuit controller contacts for indication of gate arm position, for flashing and gate arm light control, to stop the bell from ringing after the gate arm is down, etc.

The same gate arms and fittings are used with either Type 3567 or Type 3568 mechanism. The counterweight and gate support arms for roadway arms attach to the splined mechanism shaft. The sidewalk arm support casting, when used, attaches to a square end shaft.

COUNTERWEIGHTING AND GATE ARM TORQUE

These mechanisms are of the powered-down type, but the counterweights supplied with each Model 10 Signal are of correct weight to provide down torque required for proper operation of the gate arm from clear to horizontal position by gravity. The counterweights and mounting arrangement are so designed that they may be adjusted as required, without dismantling, to obtain horizontal and clear position torque values as required for each arm length.

Proper counterweighting and torque values are essential elements of Model 10 Signal design. Recommended torque values based on experience, tests and calculations of wind resistance, for gate arms of various lengths, are given in tables in instruction booklets furnished with each mechanism.

Speed Table For Crossing Signal Starts

Seconds		10	15	20	25	30	35	40	45	50	55	60
Miles Per Hour	Feet Per Second	Distance Traveled in Feet										
1	1.46	14.6	22.0	29.3	36.6	44.0	51.3	58.6	66.0	73.3	80.6	88.0
2	2.93	29.3	44.0	58.6	73.3	88.0	102.6	117.3	132.0	146.6	161.3	176.0
3	4.4	44	66	88	110	132	154	176	198	220	242	264
4	5.86	58.6	88	117.3	146.6	176	205.3	334.6	264	293.3	322.6	352
5	7.3	73	110	147	183	220	257	293	330	367	403	440
10	14.6	146	220	293	366	440	513	587	660	733	807	880
15	22.0	220	330	440	550	660	770	880	990	1,100	1,210	1,320
20	29.3	293	440	587	733	880	1,027	1,173	1,320	1,467	1,613	1,760
25	36.7	367	550	733	917	1,100	1,283	1,467	1,650	1,833	2,017	2,200
30	44.0	440	660	880	1,100	1,320	1,540	1,760	1,980	2,200	2,420	2,640
35	51.3	513	770	1,027	1,283	1,540	1,797	2,053	2,310	2,567	2,823	3,080
40	58.7	587	880	1,173	1,467	1,760	2,053	2,347	2,640	2,933	3,227	3,520
45	66.0	660	990	1,320	1,650	1,980	2,310	2,640	2,970	3,300	3,630	3,960
50	73.3	733	1,100	1,467	1,833	2,200	2,567	2,933	3,300	3,667	4,033	4,400
55	80.7	807	1,210	1,613	2,017	2,420	2,823	3,227	3,630	4,033	4,437	4,840
60	88.0	880	1,320	1,760	2,200	2,640	3,080	3,520	3,960	4,400	4,840	5,280
65	95.3	953	1,430	1,907	2,383	2,860	3,337	3,813	4,290	4,767	5,243	5,720
70	102.7	1,027	1,540	2,053	2,567	3,080	3,593	4,107	4,620	5,133	5,647	6,160
75	110.0	1,100	1,650	2,200	2,750	3,300	3,850	4,400	4,590	5,500	6,056	6,600
80	117.3	1,173	1,760	2,347	2,933	3,520	4,107	4,693	5,280	5,867	6,453	7,040
85	124.7	1,247	1,870	2,493	3,117	3,740	4,363	4,987	5,610	6,233	6,858	7,480
90	132.0	1,320	1,980	2,640	3,300	3,960	4,620	5,280	5,940	6,600	7,260	7,920
95	139.3	1,393	2,090	2,787	3,483	4,180	4,877	5,573	6,270	6,967	7,663	8,360
100	146.7	1,467	2,200	2,933	3,667	4,400	5,133	5,867	6,600	7,333	8,067	8,800
105	154.0	1,540	2,310	3,080	3,850	4,620	5,390	6,160	6,930	7,700	8,470	9,240
110	161.3	1,613	2,420	3,227	4,033	4,840	5,647	6,453	7,260	8,067	8,873	9,680
115	168.6	1,686	2,530	3,373	4,217	5,060	5,903	6,747	7,590	8,434	9,277	10,120
120	176.0	1,760	2,640	3,520	4,400	5,280	6,160	7,040	7,920	8,800	9,680	10,560
125	183.3	1,833	2,750	3,667	4,583	5,500	6,417	7,334	8,250	9,167	10,084	11,000
130	190.7	1,907	2,860	3,813	4,767	5,720	6,673	7,627	8,580	9,534	10,487	11,440

NOTE: Where length of track circuit is known, time in seconds can be determined by dividing its length by "Feet Per Second" at train speed selected.

* Does not allow for drop-away time of relays.

Information Desired With Inquiry For Complete Model 10 Signal Installation

We are pleased to furnish engineering information and to quote on all materials required for installations of Model 10 Signals. Where possible, inquiries should be accompanied by a sketch or scale track plan showing location of highway.

The following information is especially desired:

1. Width of roadway or length of roadway gate arm required.
2. If sidewalk arm is required, length thereof.
3. Length of approach track circuit required each side of highway to provide 20 seconds warning for fastest train, or information as to speeds of trains operated over the crossing.
4. If for double track road, specify if protection shall be provided for reverse traffic.
5. What special operating conditions exist within the area?
6. Details of any switches within the approach sections.
7. Circuits of any signaling now in place which will be affected by the installation of crossing protection.
8. Whether diesel or electric propulsion railroad.
9. What electric power is available at crossing?
10. Weight and type of rail, whether four or six hole splice bars and rail drilling.
11. Type of track ballast (rock, gravel, cinders or other material).
12. Type of highway surface or pavement.
13. If electric propulsion railway, specify what propulsion voltage is used and whether A.C. or D.C. If A.C., specify frequency.
14. If electric propulsion railway, state the normal and maximum return current in rails.
15. If electric propulsion railway, specify if single rail or two rail track circuits are preferred.
16. Whether spare space on pole line is available for extending electric power to ends of track circuits.

Suggested Roadway Gate Arm Light Spacing

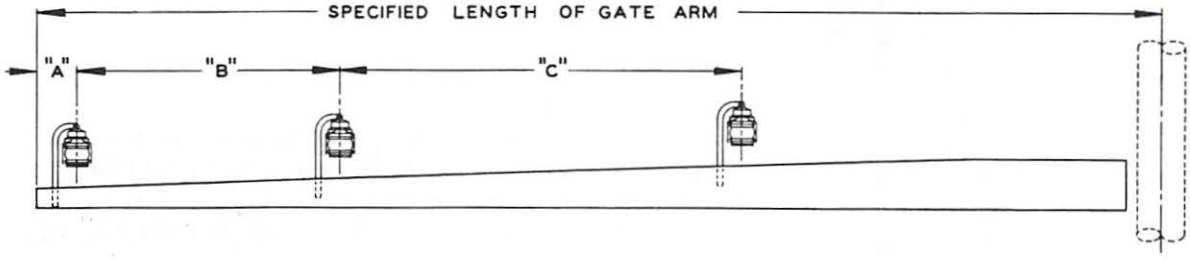

Specified Length of Gate Arm	Dimension "A"	Dimension "B"	Dimension "C"
14 Ft.	6″	36″	5′–0″
15 Ft.	18″	36″	5′–0″
16 Ft.	24″	36″	5′–0″
17 Ft.	24″	36″	5′–0″
18 Ft.	28″	41″	5′–0″
19 Ft.	28″	41″	5′–0″
20 Ft.	28″	4′–0″	5′–0″
21 Ft.	28″	4′–0″	5′–0″
22 Ft.	28″	4′–0″	5′–0″
23 Ft.	28″	4′–0″	5′–0″
24 Ft.	28″	5′–0″	5′–0″
25 Ft.	28″	5′–0″	5′–0″
26 Ft.	28″	5′–0″	5′–0″
27 Ft.	28″	5′–0″	5′–0″
28 Ft.	28″	5′–0″	5′–0″
29 Ft.	36″	6′–0″	6′–0″
30 Ft.	36″	6′–0″	6′–0″
31 Ft.	36″	6′–0″	6′–0″
32 Ft.	36″	7′–6″	7′–6″
33 Ft.	36″	7′–6″	7′–6″
34 Ft.	36″	7′–6″	7′–6″
35 Ft.	36″	9′–0″	9′–0″
36 Ft.	36″	9′–0″	9′–0″
37 Ft.	36″	9′–0″	9′–0″
38 Ft. and Over	36″	10′–0″	10′–0″

Suggested Foundation Designs For Model 10 Signals Using No. 2149-11 Junction Box Type Base

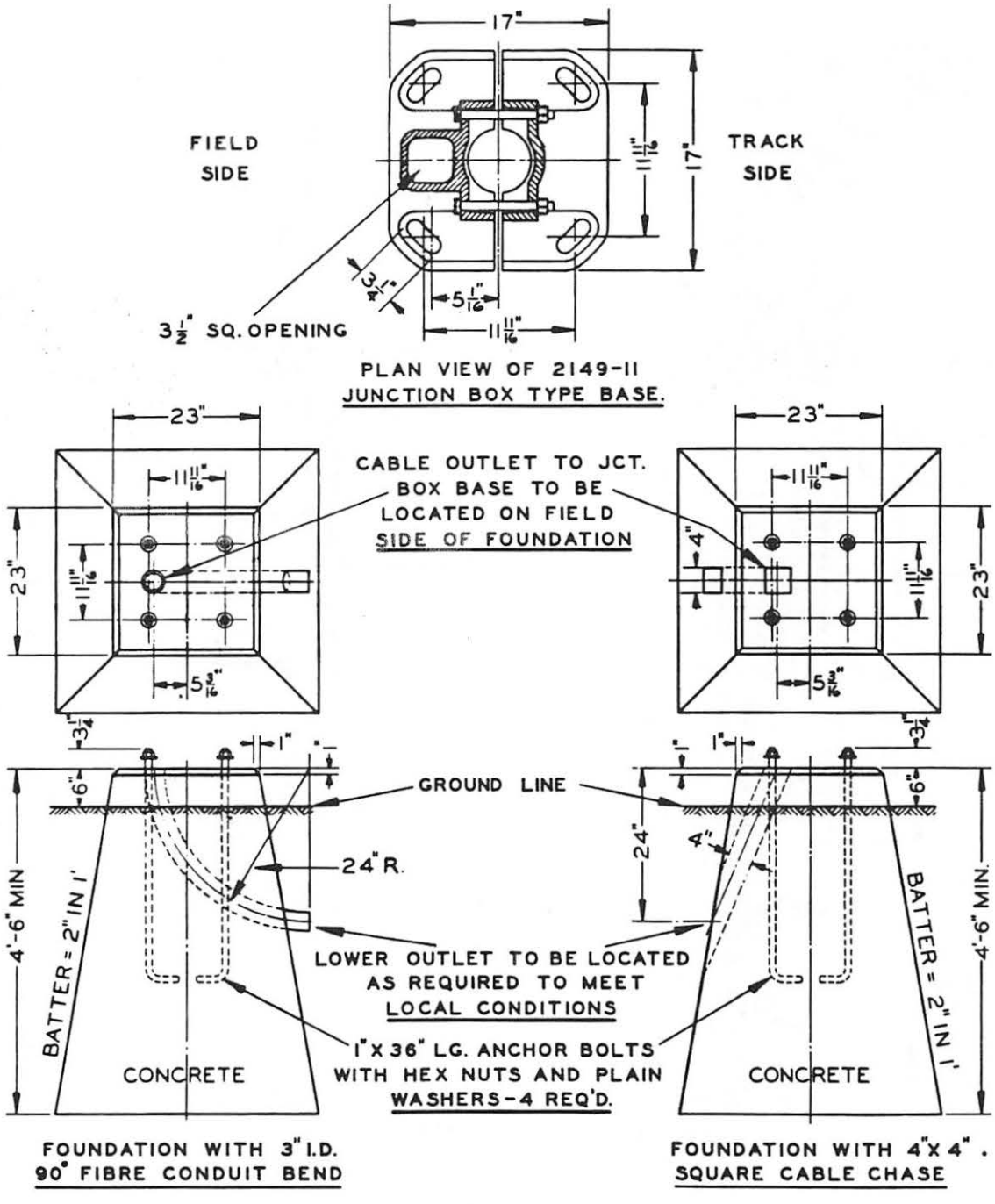

Model 10 Signal Assembly
For Roadway Arms 14' to 38'

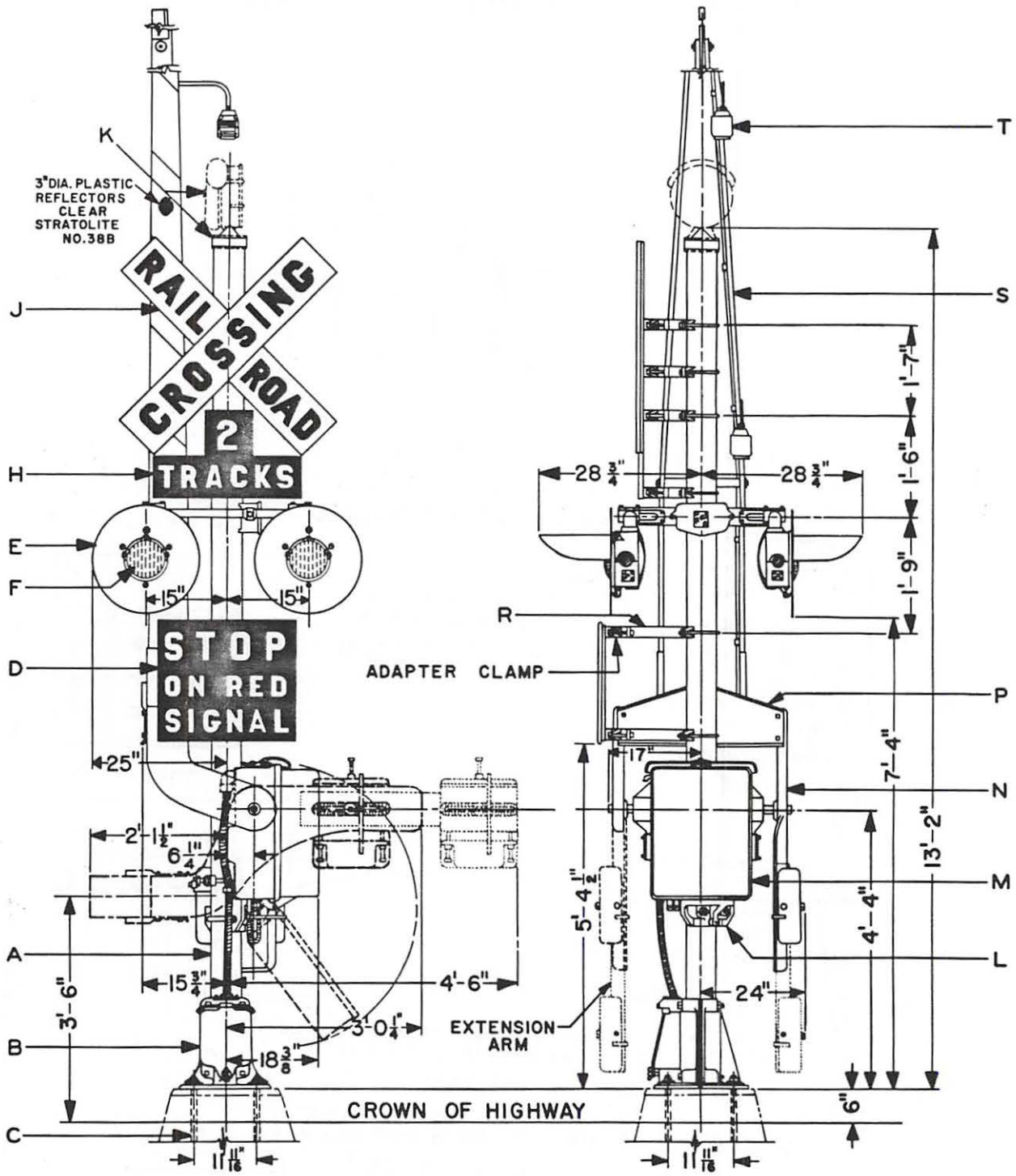

ASSEMBLY WITH 18'-24' ARMS PER —— LINES
ASSEMBLY WITH 25'-30' ARMS PER ---- LINES
ASSEMBLY WITH 31'-38' ARMS PER ····· LINES

Ref. A or Ref. B

Assembly drawings of Model 10 Signals with roadway arm 39' to 44' in length will be furnished on request.

Model 10 Signal Assembly With Sidewalk Arm For Roadway Arms 14' to 38'

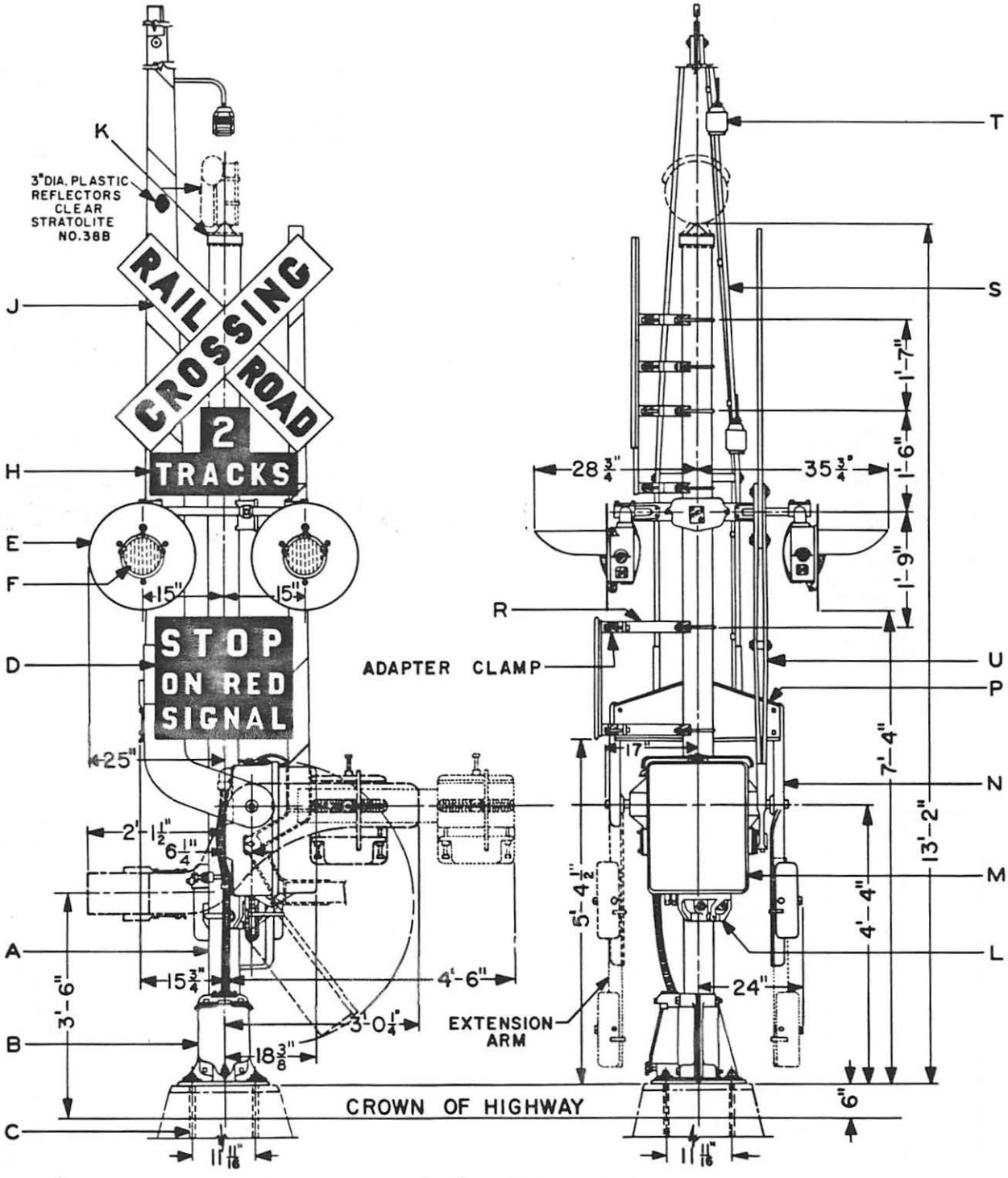

ASSEMBLY WITH 18'-24' ARMS PER —— LINES
ASSEMBLY WITH 25'-30' ARMS PER ---- LINES
ASSEMBLY WITH 31'-38' ARMS PER ····· LINES

Ref. A or B with Ref. C

Assembly drawings of Model 10 Signals with roadway arm 39' to 44' in length will be furnished on request.

Model 10 Signal Assembly

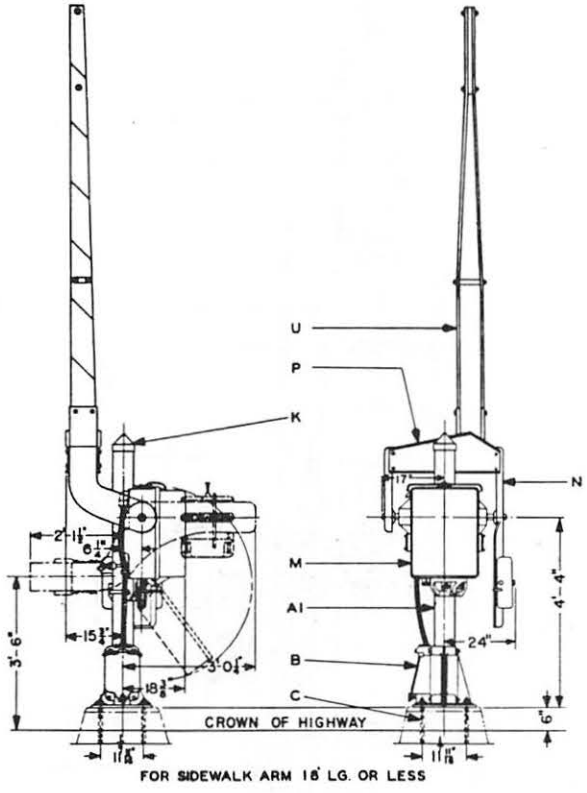

Ref. D

By far the majority of Model 10 Highway Crossing Signal installations require two Model 10 Highway Crossing Signal Assemblies; one with a bell and one with a pinnacle, although frequently two bells are used. Western's 3567-131 or 3568-131 mechanism with gate arm, 970-204 flashing light units, with 5323P roundels, 5″ I.D. mast, junction box type base and reflex-reflecting sheet type signs, meet most requirements.

Below are ordering references for these most frequently used assemblies. See Page 3-13 for information for ordering variations from these assemblies.

When sidewalk arm is required, a kit is supplied consisting of shaft, actuating parts, arm, arm support and brackets for mounting flashing light units on junction box cross arm to clear the sidewalk arm in the clear or 90° position.

Ref. No.	Description	Piece No.
A	Model 10 Highway Crossing Signal, complete with Type 3567-131 mechanism, two-way indication flashing light assemblies, 222CR bell and signs. (Specify numeral on track sign, length of Roadway Arm, from tip of arm to center of mast, and voltage and wattage of incandescent electric lamps, if required)	A-735
A1	Same as Ref. A, but with pinnacle in place of bell	A-735P
A2	Same as Ref. A, less "Stop On Red Signal" sign	A-735L
A3	Same as Ref. A1, less "Stop On Red Signal" sign	A-735PL
B	Model 10 Highway Crossing Signal, complete with Type 3568-131 mechanism, two-way indication flashing light assemblies, 222CR bell and signs. (Specify numeral on track sign, length of Roadway Arm, from tip of arm to center of mast, and voltage and wattage of incandescent electric lamps, if required)	A-741
B1	Same as Ref. B, but with pinnacle in place of bell	A-741P
B2	Same as Ref. B, less "Stop On Red Signal" sign	A-741L
B3	Same as Ref. B1, less "Stop On Red Signal" sign	A-741PL
C	Sidewalk Arm kit complete for Type 3567-131 mechanism. (Specify length of arm)	3567-140
C1	Same as Ref. C, but for Type 3568-131 mechanism	3568-140
D	Sidewalk Gate Assembly, complete with Type 3567-131 mechanism	A-743
D1	Same as Ref. D, but with Type 3568-131 mechanism	A-744
	See Page 3-13 for information for ordering commonly used variations.	

Model 10 Signal Assembly

When ordering assemblies other than are shown on Pages 3-10 to 3-12 please use the reference data below, enumerating components required.

If extra light assemblies are called for, specify degree of angle to right or left of main lights.

We will gladly furnish plans and information for special assemblies, including supporting brackets as shown on Page 3-48 and 3-49, Marker Lights as shown on Page 1-26, etc.

Ref. No.	Description	Piece No.
A	Pipe Mast 5" I.D. x 13'-0" Lg	715-24
A1	Pipe Mast 5" I.D. x 6'-0" Lg	715-16
B	Base (See Pages 3-46 and 3-47)	
C	Anchor Bolts 1" x 36"	11079
D	"Stop On Red Signal" sign (See Section 1, Pages 1-20 and 1-21)	
E	Flashing Light Assembly (See Section 1, Pages 1-15 to 1-19)	
	For Gate Assembly only (See Pages 3-37 to 3-45)	
F	Roundels (See Section 1, Page 1-14)	
G	Specify Voltage and Wattage of Lamps	
H	"Number of Tracks" sign (See Section 1, Pages 1-22 and 1-23)	
J	"Railroad Crossing" sign (See Section 1, Pages 1-24 and 1-25)	
K	Bells (See Section 5)	
	For Pinnacle (See Section 1, Pages 1-10 and 1-11)	
L	Mechanism Support (See Page 3-33 for Details)	3565-380A
M	Gate Mechanism 3567 (See Pages 1-101 to 1-111)	
M	Gate Mechanism 3568 (See Pages 1-115 to 1-125)	
N	Gate and Counterweight Arms (See Pages 3-34 and 3-35)	
P	Gate Arm Support (See Page 3-32)	
R	Extension Bracket (See Page 3-50)	
S	Gate Arm (See Pages 3-15 to 3-23)	
T	Gate Lights (See Pages 3-30 and 3-31)	
U	Sidewalk Gate Arms (See Pages 3-24 to 3-27)	
V	Sidewalk Gate Support (See Page 3-36)	
W	Gate Light Jct. Boxes (See Pages 3-14 and 3-15)	
X	Buffer Leg (See Page 3-29)	

WESTERN-CULLEN-HAYES, Inc.

Roadway Arms, Extendable Type

14' MINIMUM 18' MAXIMUM
ADJUSTABLE IN ONE-FOOT INCREMENTS

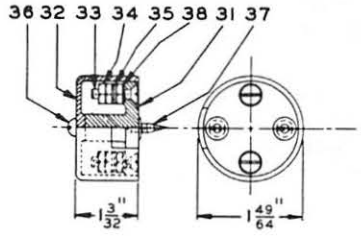

Ref. W

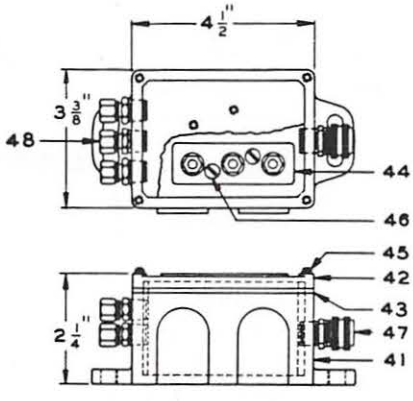

Ref. W1

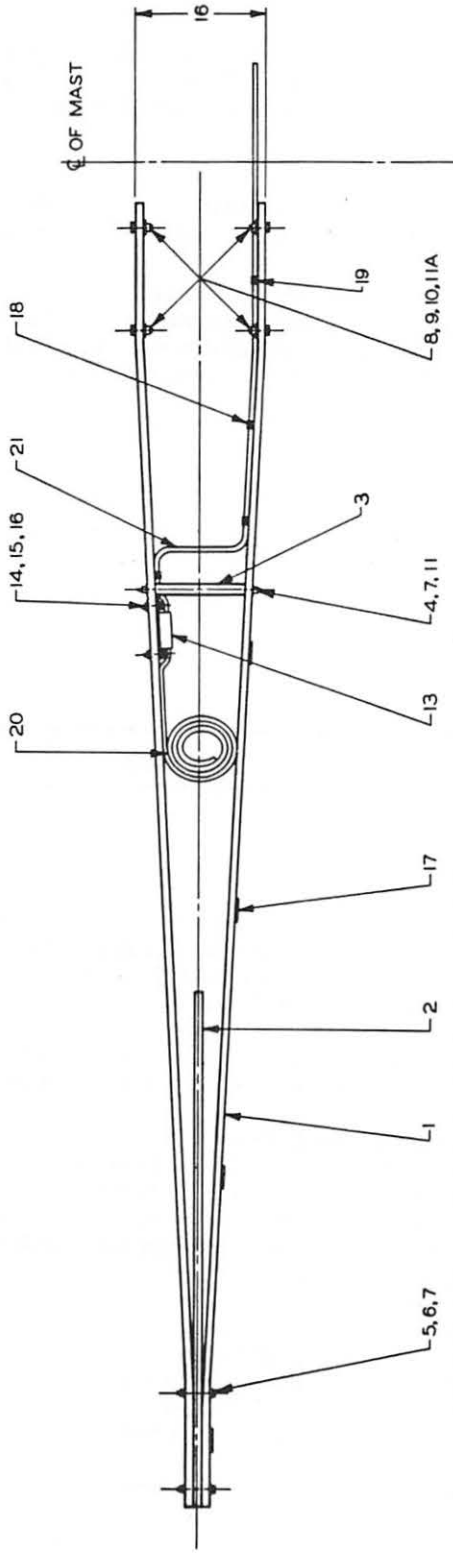

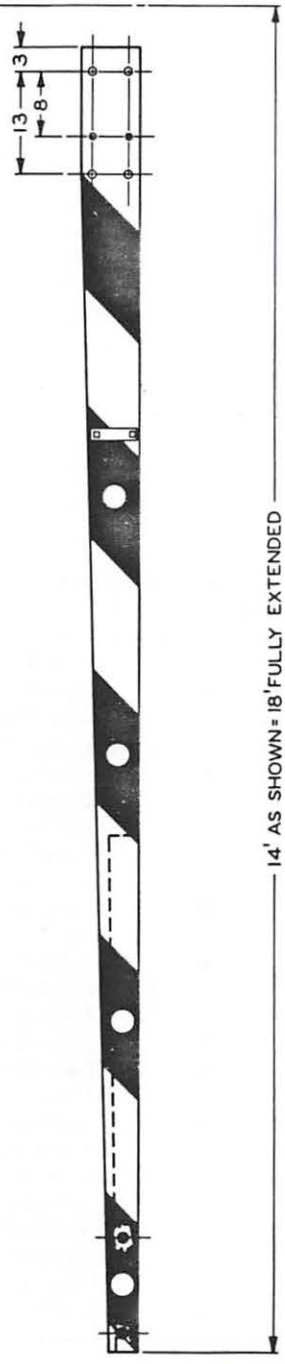

Ref. S

Roadway Arms, Extendable Type

14′ MINIMUM 18′ MAXIMUM
ADJUSTABLE IN ONE-FOOT INCREMENTS

Ref. No.	Description	Piece No.
S	Assembly of Roadway Arm with wiring and reflectors, less gate lights	3565-331
S1	Same as Ref. S, less wiring and reflectors	3565-361
S2	Wiring Harness Only. (Includes all material for wiring roadway arm for three gate lights)	3565-341
W	Type 3561 Terminal Block Complete, Bakelite	3561-196
W1	Type 3561 Junction Box Complete, Aluminum	3561-71D
	REPLACEMENTS PARTS	
1	Base Board (Specify Track or Field Side)	3565-54-13
2	Tongue	3565-52A
3	Spacer Block	3565-55
4	Through Stud	3562-66EH
5	Machine Bolt, 3/8″-16 x 3″ lg. hex. hd., stl.	
6	Washer, 7/16″ I.D. x 1½″ O.D. stl.	
7	Square Nut, 3/8″-16, stl.	
8	Machine Bolt, ½″-13 x 2″ lg., hex. hd., stl.	
9	Hex. Nut, ½″-13, stl.	
10	Spring Lock Washer, ½″, stl.	
11	Aluminum Washer Plate	3562-77A
11A	Aluminum Washer Plate	3562-71
13	Junction Box Assembly. (For Details see Ref. 41 to 48 below)	3561-71D
14	Machine Bolt, 5/16″-18 x 1¾″ lg., hex. hd., stl.	
15	Hex. Nut, 5/16″-18 x 1¾″ lg., hex. hd., stl.	
16	Washer, 5/16″ plain, stl.	
17	3″ Diameter Plastic Reflector, with mounting screws	38B
18	Aluminum Cable Clip for one 3-Conductor Cable	
19	Nylon Cable Clip for one 3-Conductor Cable	1953-7A
20	2-Conductor Cable, In Bulk	
21	3-Conductor Cable, In Bulk	
	PARTS NOT ILLUSTRATED	
22	Aluminum Cable Clip for three 2-Conductor Cables	
22A	Same as Ref. 22, but for two 2-Conductor Cables	
22B	Same as Ref. 22, but for one 2-Conductor Cable	
23	Wood Screws for above clips, No. 8 x ¾″ rd. hd., brass	
24	½″ Cable Grip, for one 3-Conductor Cable	DB-990
25	Pipe Reducer, ¾″ to ½″, for Ref. 24	
	REPLACEMENTS PARTS FOR REF. W AND W1	
31	Terminal Block, Bakelite	3561-197A
32	Cover, Bakelite	3561-198
33	No. 10-32 x 7/8″ Lg. fl. hd. mach. screw, brass	
34	No. 10-32 Hex. Nut, brass	
35	No. 10 Plain Washer, brass	
36	No. 10-32 x ½″ Lg. rd. hd. mach. screw, brass	
37	No. 6 x ¾″ Lg. fl. hd. wood screw, brass	
38	No. 10 Internal Everlock Washer, steel	
41	Box, cast aluminum	3561-75J
42	Cover, cast aluminum	3561-76
43	Gasket	3561-77A
44	Terminal Block	1005-102
45	No. 8-32 x ¾″ Lg. rd. hd. mach. screw & lock washer, brass	
46	No. 8-32 x 3/8″ Lg. rd. hd. mach. screw, brass	
47	3/8″ Cable Grip, for one 3-Conductor Cable	DB-938
48	Compression Connector	1580-7

Roadway Arms, Extendable Type

19' MINIMUM 24' MAXIMUM
ADJUSTABLE IN ONE-FOOT INCREMENTS

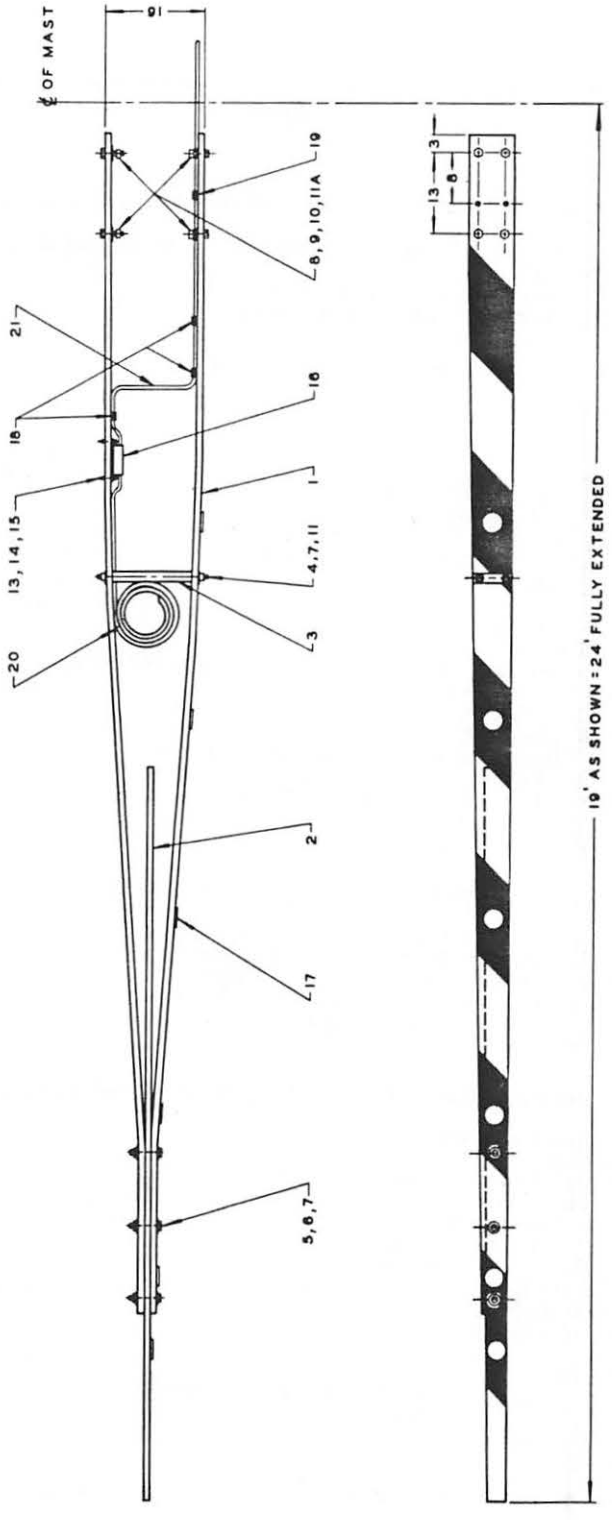

Ref. S3

Roadway Arms, Extendable Type

19' MINIMUM 24' MAXIMUM
ADJUSTABLE IN ONE-FOOT INCREMENTS

Ref. No.	Description	Piece No.
S3	Assembly of Roadway Arm with wiring and reflectors, less gate lights	3565-332
S4	Same as Ref. S3, less wiring and reflectors	3565-362
S5	Wiring Harness Only. (Includes all material for wiring roadway arm for three gate lights)	3565-342
	REPLACEMENT PARTS	
1	Base Board (Specify Track or Field Side)	3565-54-16
2	Tongue	3565-52B
3	Spacer Block	3565-55
4	Through Stud	3562-66EH
5	Machine Bolt, 3/8"-16 x 3" lg. hex. hd., stl.	
6	Washer, 7/16" I.D. x 1½" O.D., stl.	
7	Square Nut, 3/8"-16, stl.	
8	Machine Bolt, ½"-13 x 2" lg., hex. hd., stl.	
9	Hex. Nut, ½"-13, stl.	
10	Spring Lock Washer, ½", stl.	
11	Aluminum Washer Plate	3565-56
11A	Aluminum Washer Plate	3562-71
13	Machine Bolt, 5/16"-18 x 1¾" lg., hex. hd., stl.	
14	Hex. Nut, 5/16"-18, stl.	
15	Washer, 5/16", plain, stl.	
16	Junction Box Assembly. (For Details see Pages 3-14 and 3-15)	3561-71D
17	3" Diameter Plastic Reflector, with mounting screws	38B
18	Aluminum Cable Clip for one 3-Conductor Cable	
19	Nylon Cable Clip for one 3-Conductor Cable	1953-7A
20	2-Conductor Cable, In Bulk	
21	3-Conductor Cable, In Bulk	
	PARTS NOT ILLUSTRATED	
22	Aluminum Cable Clip for three 2-Conductor Cables	
22A	Same as Ref. 22, but for two 2-Conductor Cables	
22B	Same as Ref. 22, but for one 2-Conductor Cable	
23	Wood Screws for above clips, No. 8 x ¾", rd. hd., brass	
24	Terminal Block and Mounting screws (For Details see Pages 3-14 and 3-15)	3561-196
25	½" Cable Grip, for one 3-Conductor Cable	DB-990
26	Pipe Reducer, ¾" to ½", for Ref. 25	

Roadway Arms, Extendable Type

25′ MINIMUM 30′ MAXIMUM
ADJUSTABLE IN ONE-FOOT INCREMENTS

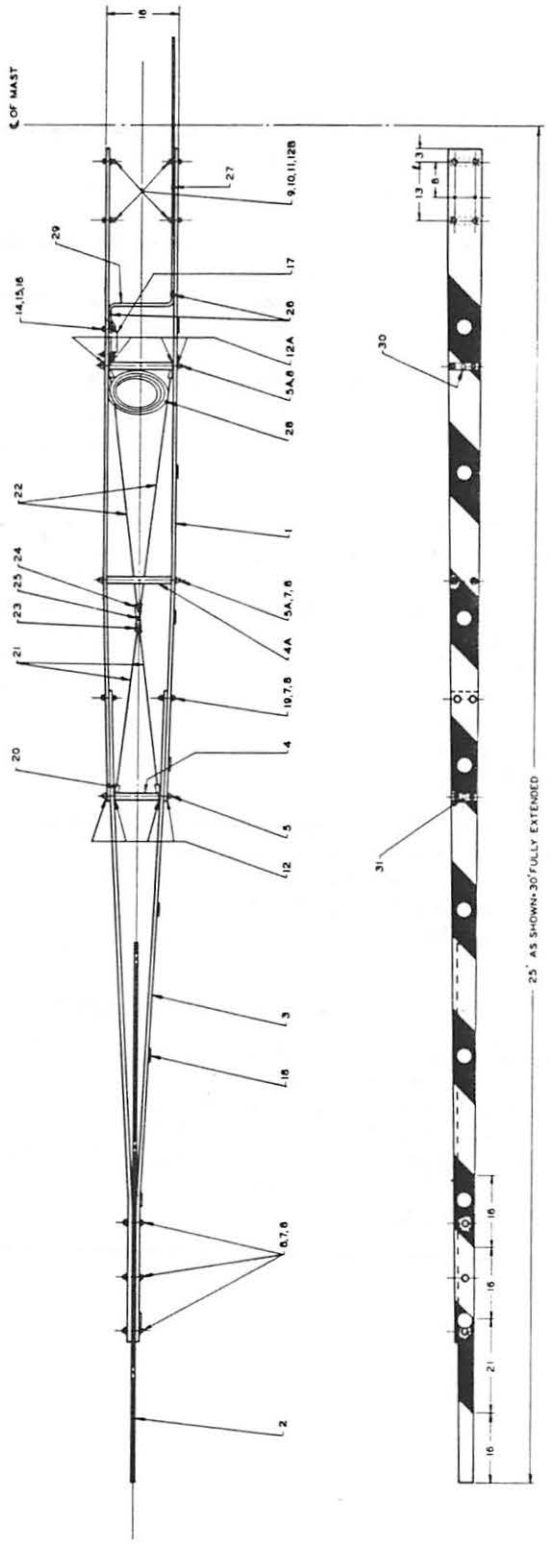

Ref. S6

Roadway Arms, Extendable Type

25' MINIMUM 30' MAXIMUM
ADJUSTABLE IN ONE-FOOT INCREMENTS

Ref. No.	Description	Piece No.
S6	Assembly of Roadway Arm with wiring and reflectors, less gate lights	3565-333
S7	Same as Ref. S6, less wiring and lights	3565-363
S8	Wiring Harness Only (Includes all material for wiring roadway arm for three gate lights)	3565-343
	REPLACEMENT PARTS	
1	Base Board (Specify Track or Field side)	3562-53-12
2	Tongue	3562-52B
3	Side Board (Specify Track or Field side)	3562-54-12E
4	Spacer Block	3562-75
4A	Spacer Block	3562-74
5	Through Stud	3562-66B
5A	Through Stud	3562-66
6	Machine Bolt, 3/8"-16 x 3" lg. hex. hd., stl.	
7	Washer, 7/16" I.D. x 1½" O.D., stl.	
8	Square Nut, 3/8"-16, stl.	
9	Machine Bolt, ½"-13 x 2" lg. hex. hd., stl.	
10	Hex. Nut, ½"-13, stl.	
11	Spring Lock Washer, ½", stl.	
12	Aluminum Washer Plate	3562-72A
12A	Aluminum Washer Plate	3562-71A
12B	Aluminum Washer Plate	3562-71
14	Machine Bolt, 5/16"-18 x 1¾" lg., hex. hd., stl.	
15	Hex. Nut, 5/16"-18, stl.	
16	Washer, 5/16", plain, stl.	
17	Junction Box Assembly (For Details see Pages 3-14 and 3-15)	3561-71D
18	3" Diameter Plastic Reflector, with Mounting Screws	38B
19	Machine Bolt, 3/8"-16 x 2¼" lg., hex. hd., stl.	
20	Tie-Rod Clip Assembly	3562-70A
21	Tie-Rod and Nut Assembly 41½" lg., right hand thread	3562-63E
22	Tie-Rod and Nut Assembly 48" lg., left hand thread	3562-63F
23	Turnbuckle	3562-67
24	Turnbuckle	3562-68
25	Cap Screw, ¼"-20 x 1¼" lg., hex. hd., stl.	
26	Aluminum Cable Clip for one 3-Conductor Cable	
27	Nylon Cable Clip for one 3-Conductor Cable	1953-7A
28	2-Conductor Cable, In Bulk	
29	3-Conductor Cable, In Bulk	
30	Machine Bolt, 5/16"-18 x 1¾" lg., hex. hd., with sq. nut	
31	Machine Bolt, 5/16"-18 x 2½" lg., hex. hd., with sq. nut	
	PARTS NOT ILLUSTRATED	
32	Wood Screws, No. 8 x ¾" rd. hd., Brass, for Cable Clips	
33	Terminal Block and Mounting Screws (For Details see Pages 3-14 and 3-15)	3561-196
34	½" Cable Grip, for one 3-Conductor Cable	DB-990
35	Pipe Reducer, ¾" to ½", for Ref. 34	

WESTERN-CULLEN-HAYES, Inc.

Roadway Arms

31′ TO 38′ LONG, AS SPECIFIED

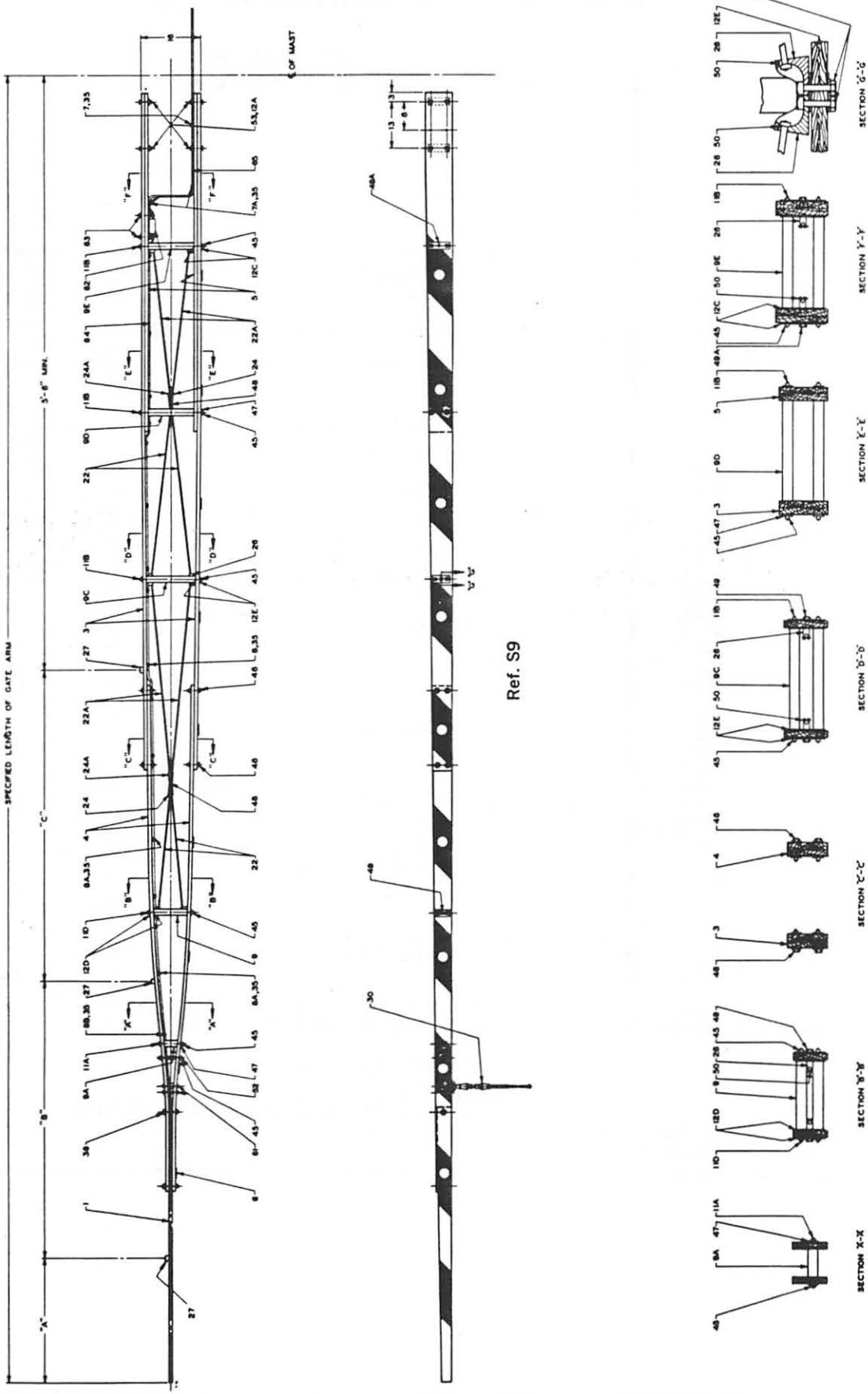

Roadway Arms

31′ TO 38′ LONG, AS SPECIFIED

Each arm in this range is constructed to the length specified.

Ref. No.	Description	Piece No.
S9	Assembly of Roadway Arm, complete with wiring and reflectors less gate lights. (Specify Length of Arm and Dimensions "A," "B" and "C")	3565-34ML
S10	Same as Ref. A, less wiring and reflectors (Specify Length of Arm)	3565-60
S11	Wiring Harness Only (Includes all material for wiring roadway arm for three gate lights.) (Specify Length of Arm and Dimensions "A," "B" and "C")	3565-215MB
	REPLACEMENT PARTS	
1	Tongue	See Table
3	Base Board (Specify Track or Field side)	See Table
4	Side Board (Specify Track or Field side)	See Table
5	Re-enforcing Board	3562-53-8
6	3" Dia. Plastic Reflector	38B
7	Nylon Cable Clip, for one 3-Conductor Cable	1953-7A
7A	Aluminum Cable Clip, for one 3-Conductor Cable	
8	Aluminum Cable Clip, for three 2-Conductor Cables	
8A	Same as Ref. 8, but for two 2-Conductor Cables	
8B	Same as Ref. 8, but for one 2-Conductor Cable	
9	Spacer Block, 10⅛" lg.	3562-75
9A	Spacer Block, 4" lg.	3562-76
9C	Spacer Block, 14⅛" lg.	3562-87
9D	Spacer Block, 13" lg.	3562-74XR
9E	Spacer Block, 12¾" lg.	3562-74R
11A	Through Stud, 6½" lg.	3562-66D
11B	Through Stud, 16⅞" lg.	3562-66
11D	Through Stud, 12¾" lg.	3562-66E
12A	Washer Plate	3562-71
12C	Washer Plate	3562-71A
12D	Washer Plate	3562-82
12E	Washer Plate	3562-72B
22	Tie-Rod and Nut Assembly, 41½" lg., right hand thread	3562-63E
22A	Tie-Rod and Nut Assembly, 48" lg., left hand thread	3562-63F
24	Turnbuckle	3562-67
24A	Turnbuckle	3562-68
26	Tie-Rod Clip	3562-70A
27	Assembly of Terminal Block (For Details see Pages 3-14 and 3-15)	3561-196
30	Buffer Leg (For Details see Page 3-29)	3562-316A
35	No. 8 x ¾" rd. hd. wood screw, brass	
38	Machine Bolt, ⅜"-16 x 3" lg., hex. hd., sq. nut and 2 plain washers	
45	Sq. Nut, ⅜"-16, stl.	
46	Machine Bolt, ⅜"-16 x 2¼" lg., hex. hd., stl., sq. nut and 2 plain washers	
47	Washer, 7/16" I.D. x 1½" O.D., plain, stl.	
48	Cap Screw, ¼"-20 x 1¼" lg., hex. hd., stl.	
49	Machine Bolt, hex. hd., 5/16"-18 x 1¾" lg., and sq. nut	
49A	Machine Bolt, hex. hd., 5/16"-18 x 2½" lg., and sq. nut	
50	Cotter Pin, ⅛" x 1½" lg., stl.	
52	Through Stud, 5⅛" lg.	3562-66AK
53	Machine Bolt, ½"-13 x 2¾" lg., hex. hd., stl., hex. nut and lock washer	
61	Rivet, rd. hd., stl., ⅜" x 3½", complete with cotter pin	3362-133A
62	Junction Box Assembly (For Details see Pages 3-14 and 3-15)	3561-71D
63	Machine Bolt, 5/16"-18 x 1¾" lg., hex. hd., hex. nut and 2 plain washers	
64	2-Conductor Cable, In Bulk	
65	3-Conductor Cable, In Bulk	
	PARTS NOT ILLUSTRATED	
70	½" Cable Grip, for 3-Conductor Cable	DB990
71	Pipe Reducer, ¾" to ½", for Ref. 70	

Table

Specified Length of Gate Arm	Reference 1 Tongue Piece No.	Reference 3 Base Board Piece No.	Reference 4 Side Board Piece No.
31	3562-52A	3562-16	3562-54-12A
32	3562-52B	3562-16	3562-54-12A
33	3562-52C	3562-16	3562-54-12A
34	3562-52D	3562-16	3562-54-12A
35	3562-52A	3562-16A	3562-54-16
36	3562-52B	3562-16A	3562-54-16
37	3562-52C	3562-16A	3562-54-16
38	3562-52D	3562-16A	3562-54-16

WESTERN-CULLEN-HAYES, Inc.

Roadway Arms

39' TO 44' LONG

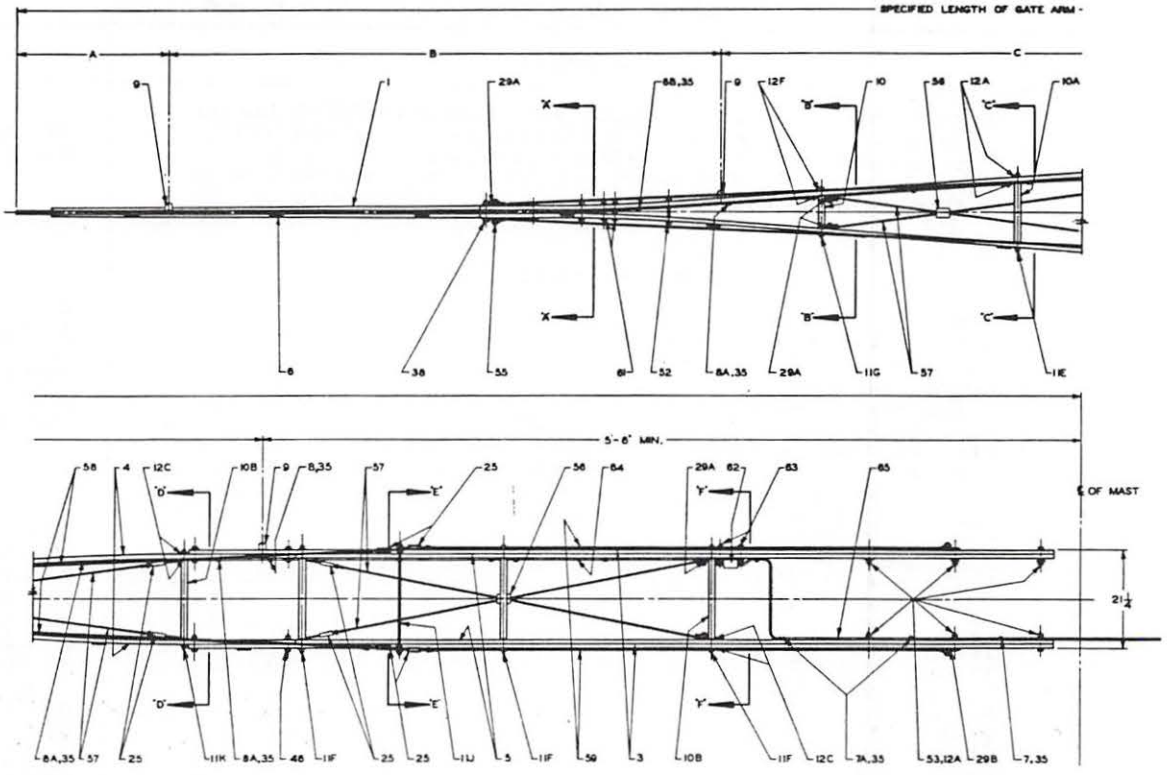

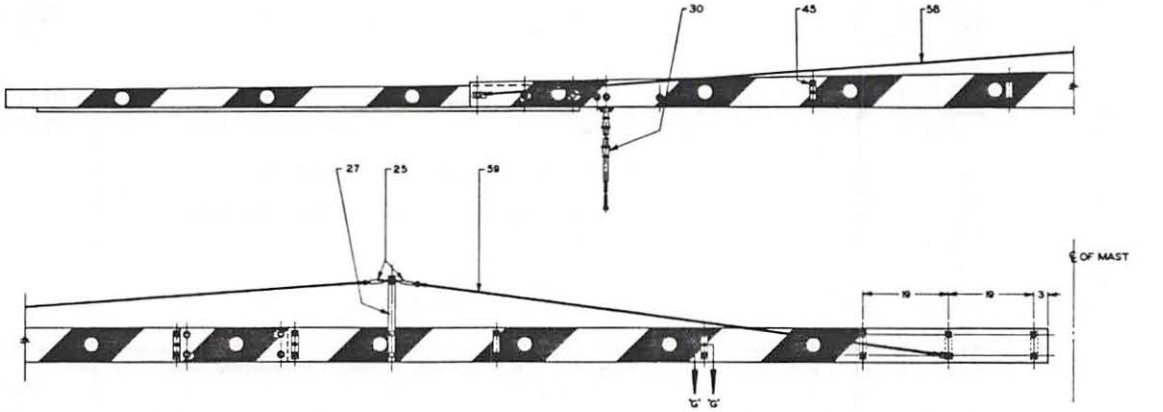

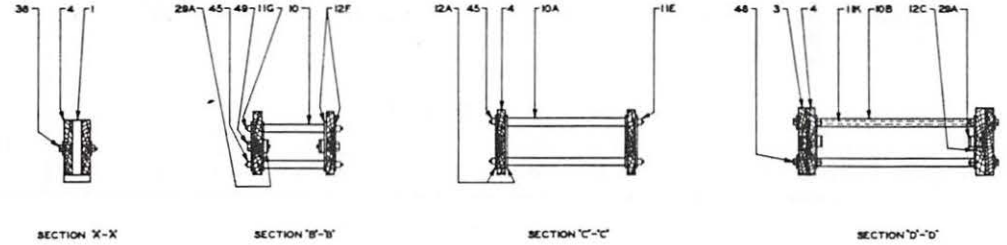

SECTION 'X-X'

SECTION 'B-B'

SECTION 'C-C'

SECTION 'D-D'

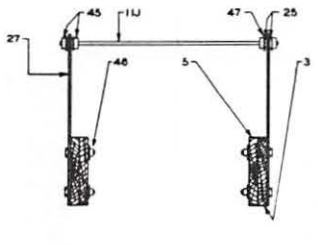

SECTION 'E-E'

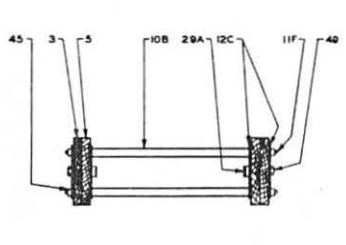

SECTION 'F-F'

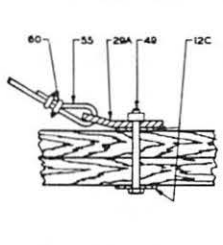

SECTION 'G-G'

Roadway Arms

39′ TO 44′ LONG

Ref. No.	Description	Piece No.
S12	Assembly of Roadway Arm complete with wiring and reflectors, less gate lights. (Specify Length of Arm and Dimensions "A," "B" and "C")	3565-34ML
S13	Same as Ref. S12, less wiring and reflectors. (Specify Length of Arm)	3565-60
S14	Wiring Harness Only. (Includes all material for wiring roadway arm for three gate lights.) (Specify Length of Arm and Dimensions "A," "B" and "C")	3565-215MB
	REPLACEMENT PARTS	
1	Tongue, for 39′ arm	3562-52J
1A	Tongue, for 40′ arm	3562-52K
1B	Tongue, for 41′ arm	3562-52L
1C	Tongue, for 42′ arm	3562-52M
1D	Tongue, for 43′ arm	3562-52N
1E	Tongue, for 44′ arm	3562-52P
3	Base Board, (Specify Track or Field side)	3562-54-16F
4	Side Board, (Specify Track or Field side)	3562-54-16A
5	Reinforcing Board	3562-54-14E
6	3″ Diameter Plastic Reflector	38B
7	Nylon Cable Clip, for one 3-Conductor Cable	1953-7A
7A	Aluminum Cable Clip, for one 3-Conductor Cable	
8	Aluminum Cable Clip, for three 2-Conductor Cables	
8A	Same as Ref. 8, but for two 2-Conductor Cables	
8B	Same as Ref. 8, but for one 2-Conductor Cable	
9	Assembly of Terminal Block (For Details see Pages 3-14 and 3-15)	3561-196
10	Spacer Tubing, 7″ long	3562-99B
10A	Spacer Tubing, 13¼″ long	3562-99A
10B	Spacer Tubing, 17¾″ long	3562-99
11E	Through Stud, 16″ long	3562-66X
11F	Through Stud, 21¾″ long	3562-66Y
11G	Through Stud, 10⅛″ long	3562-66F
11J	Through Stud, 24″ long	3562-272B
11K	Through Stud, 20¼″ long	3562-66N
12A	Washer Plate	3562-71
12C	Washer Plate	3562-71A
12F	Washer Plate	3562-273
25	Turnbuckle	3562-184
27	Upright Support	3562-271
29A	Guy Wire Clip	3562-283
29B	Guy Wire Clip	3562-282A
30	Buffer Leg (For Details see Page 3-29)	3562-316A
35	No. 8 x ¾″ rd. hd. wood screws, brass	
38	Machine Bolt, ⅜″-16 x 3″ lg., hex. hd., stl., sq. nut and two plain washers	
45	Sq. Nut, ⅜″-16, stl.	
46	Machine Bolt, ⅜″-16 x 2¼″ lg., hex. hd., stl., sq. nut and 2 plain washers	
47	Washer, 7/16″ I.D. x 1⅛″ O.D., Plain, stl.	
49	Machine Bolt, hex. hd., ½″-13 x 1¾″ long and sq. nut	
52	Through Stud, 5⅛″ long	3562-66AK
53	Machine Bolt, hex. hd., ½″-13 x 2¾″ lg. hex. nut and lock washer	
55	Thimble	90591
56	Cable Separator	3562-282
57	Guy Wire Subassembly, 7′-6″ lg., (Includes Ref. 25, 55 and 60)	3562-284B
58	Guy Wire Subassembly, 18′-0″ lg., (Includes Ref. 25, 55 and 60)	3562-284A
59	Guy Wire Subassembly, 10′-0″ lg., (Includes Ref. 25, 55 and 60)	3562-284
60	Crosby Clip	90592
61	Rivet, rd. hd., stl., ⅜″ x 3⅛″, complete with cotter pin	3562-133A
62	Junction Box Assembly. (For Details see Pages 3-14 and 3-15)	3561-71D
63	Machine Bolt, 5/16″-18 x 1¾″ lg., hex. hd., hex. nut and 2 plain washers	
64	2-Conductor Cable, In Bulk	
65	3-Conductor Cable, In Bulk	
	PARTS NOT ILLUSTRATED	
70	½″ Cable Grip, for 3-Conductor Cable	DB990
71	Pipe Reducer, ¾″ to ½″	

WESTERN-CULLEN-HAYES, Inc.

Sidewalk Arms 6' to 18' Long
Type 3565-34SW Type 3565-60SW
For Model 10 Signals

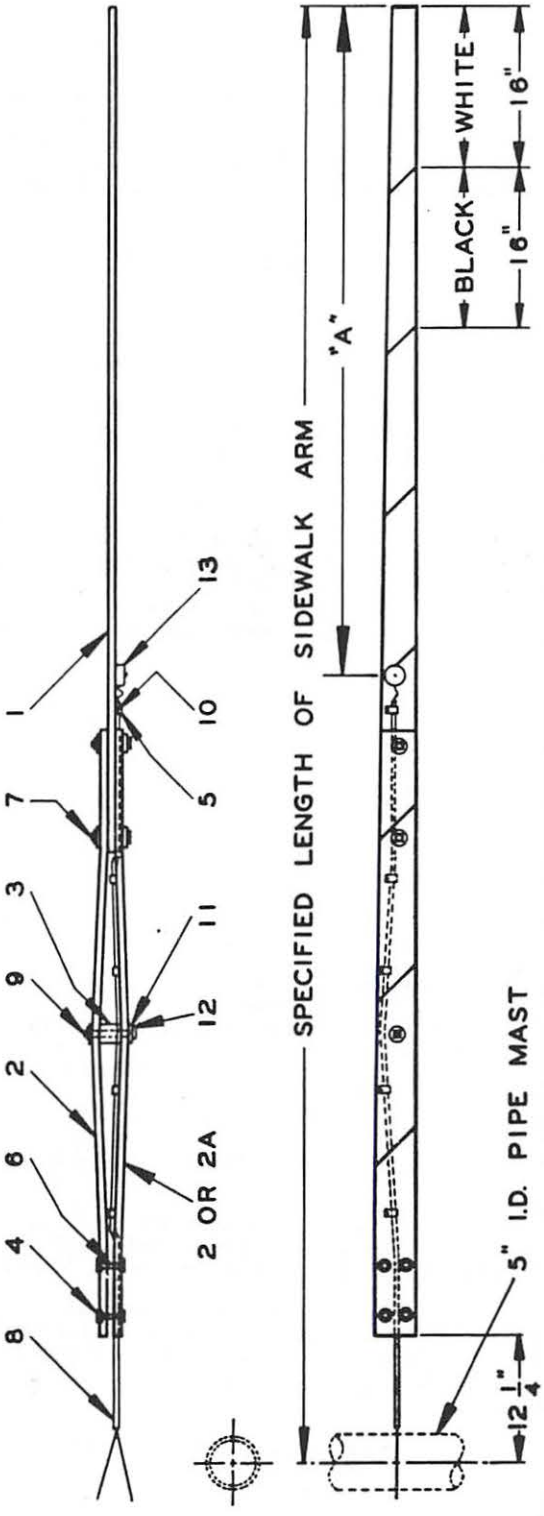

Ref. U

Sidewalk Arms 6' to 18' Long
Type 3565-34SW Type 3565-60SW
For Model 10 Signals

Ref. No.	Description	Piece No.
U	Assembly of Sidewalk Arm Complete with Wiring (Less Light) (Specify Length of Sidewalk Arm and Dimension "A")	3565-34SW
U1	Assembly of Sidewalk Arm Complete (Less Wiring and Light) (Specify Length of Sidewalk Arm)	3565-60SW
	REPLACEMENT PARTS	
1	Tongue	See Table
2	Base Board	See Table
2A	Base Board (For 3565-34SW only)	See Table
3	Spacer Block	3565-150
4	5/16" Plain Washer	
5	Clip	3562-95
6	Cap Screw, 5/16"-24 S.A.E. x 1½" Lg. hex. hd. stl.	
7	Mach. Bolt, ⅜"-16 x 3¼" Lg. sq. hd. stl., hex. Nut and two Plain Washers	
8	No. 18-2 Conductor Neoprene Covered Type "S" Cord. (Specify Length)	
9	Through Stud	3562-66DD
10	Wood Screw No. 10 x ¾" Lg. rd. hd. brass	
11	Washer ⅜" Plain, Stl.	
12	Hex. Nut ⅜"-16 Stl.	
13	Assembly of Terminal Block (For Details see Pages 3-14 and 3-15)	3561-196

Table

Specified Length of Gate Arm	Ref. No. 1	Ref. No. 2	Ref. No. 2A	Suggested Values For Dimension "A"
6'-0"	3565-142-1	3565-141	3565-141A	2'-2"
6'-6"	3565-142-1A	3565-141	3565-141A	2'-5"
7'-0"	3565-142-2	3565-141	3565-141A	2'-8"
7'-6"	3565-142-2A	3565-141	3565-141A	2'-11"
8'-0"	3565-142-3	3565-141	3565-141A	3'-2"
8'-6"	3565-142-3A	3565-141	3565-141A	3'-5"
9'-0"	3565-142-4	3565-141	3565-141A	3'-8"
9'-6"	3565-142-4A	3565-141	3565-141A	3'-11"
10'-0"	3565-142-5	3565-141	3565-141A	4'-2"
10'-6"	3565-142-5A	3565-141	3565-141A	4'-5"
11'-0"	3565-142-6	3565-141	3565-141A	4'-8"
11'-6"	3565-142-6A	3565-141	3565-141A	4'-11"
12'-0"	3565-142-7	3565-141	3565-141A	5'-2"
12'-6"	3565-142-4A	3565-155	3565-155A	5'-5"
13'-0"	3565-142-5	3565-155	3565-155A	5'-8"
13'-6"	3565-142-5A	3565-155	3565-155A	5'-11"
14'-0"	3565-142-6	3565-155	3565-155A	6'-2"
14'-6"	3565-142-6A	3565-155	3565-155A	6'-5"
15'-0"	3565-142-7	3565-155	3565-155A	6'-8"
15'-6"	3565-142-4A	3565-156	3565-156A	6'-11"
16'-0"	3565-142-5	3565-156	3565-156A	7'-2"
16'-6"	3565-142-5A	3565-156	3565-156A	7'-5"
17'-0"	3565-142-6	3565-156	3565-156A	7'-8"
17'-6"	3565-142-6A	3565-156	3565-156A	7'-11"
18'-0"	3565-142-7	3565-156	3565-156A	8'-2"

WESTERN-CULLEN-HAYES, Inc.

Sidewalk Arms 6' to 18' Long
Type 3565-34SWX Type 3565-60SWX

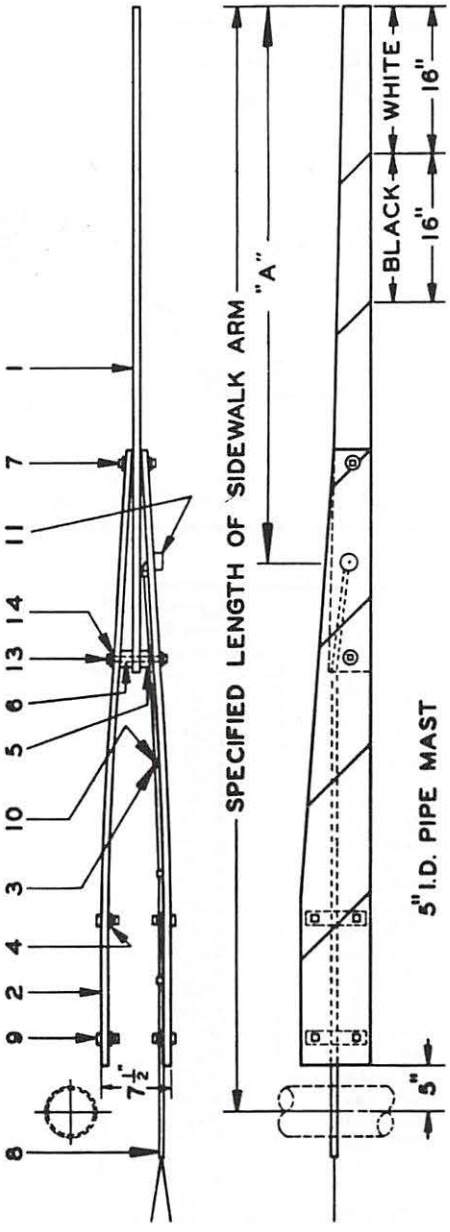

Arm lengths 6' to 10'-6"
Ref. U2

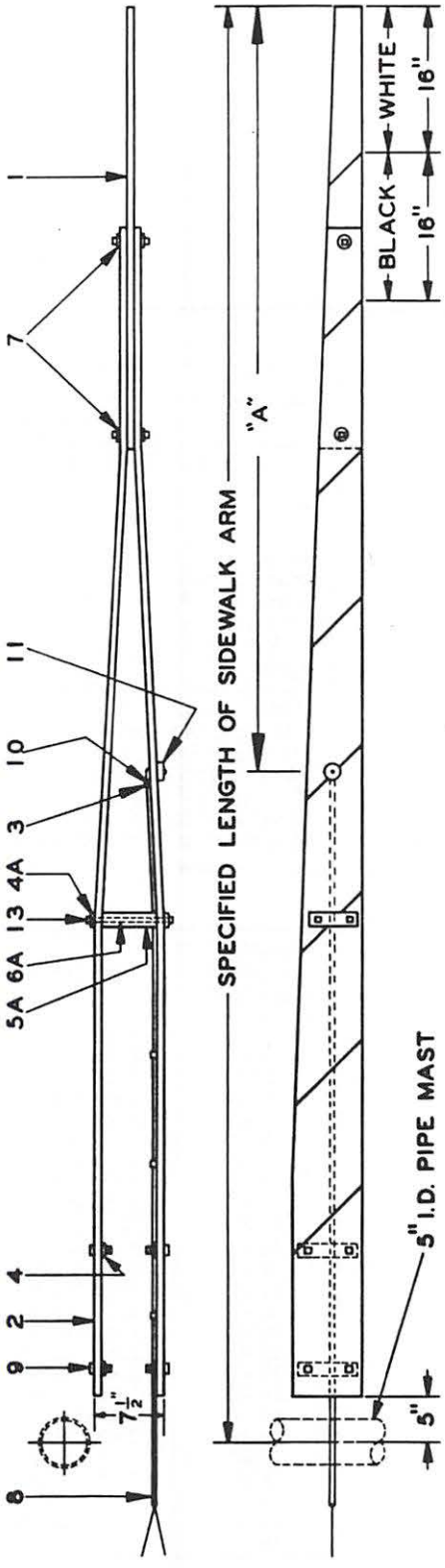

Arm lengths 11' to 18'
Ref. U3

Sidewalk Arms 6' to 18' Long
Type 3565-34SWX Type 3565-60SWX

Ref. No.	Description	Piece No.
U2	Assembly of Sidewalk Arm Complete with Wiring (Less Light) (Specify Length of Sidewalk Arm and Dimension "A")	3565-34SWX
U3	Assembly of Sidewalk Arm Complete (Less Wiring and Light) (Specify Length of Sidewalk Arm)	3565-60SWX
	REPLACEMENT PARTS	
1	Tongue	See Table
2	Base Board	See Table
3	Clip	3562-95
4	Washer Plate	3562-71
4A	Washer Plate	3562-72
5	Spacer Block	3562-98
5A	Spacer Block	3562-59
6	Through Stud	3562-66D
6A	Through Stud	3562-66H
7	Mach. Bolt, 3/8"16 x 3" Lg. sq. hd. stl., hex. Nut and two Plain Washers	
8	No. 18-2 Conductor Neoprene Covered Type "S" Cord (Specify Length)	
9	Mach. Bolt, 1/2"-13 x 2" Lg. hex. hd. stl., hex. Nut and Lock Washer	
10	Wood Screw No. 10 x 3/4" Lg. brass	
11	Assembly of Terminal Block Complete (For Details see Pages 3-14 and 3-15)	3561-196

Table

Specified Length of Gate Arm	Ref. No. 1	Ref. No. 2	Suggested Values For Dimension "A"
6'-0"	3562-57-2	3562-56-6	2'-2"
6'-6"	3562-57-2A	3562-56-6	2'-5"
7'-0"	3562-57-3	3562-56-6	2'-8"
7'-6"	3562-57-3A	3562-56-6	2'-11"
8'-0"	3562-57-4	3562-56-6	3'-2"
8'-6"	3562-57-4A	3562-56-6	3'-5"
9'-0"	3562-57-5	3562-56-6	3'-8"
9'-6"	3562-57-5A	3562-56-6	3'-11"
10'-0"	3562-57-6	3562-56-6	4'-2"
10'-6"	3562-57-6A	3562-56-6	4'-5"
11'-0"	3562-57-2	3562-58	4'-8"
11'-6"	3562-57-2A	3562-58	4'-11"
12'-0"	3562-57-3	3562-58	5'-2"
12'-6"	3562-57-3A	3562-58	5'-5"
13'-0"	3562-57-4	3562-58	5'-8"
13'-6"	3562-57-4A	3562-58	5'-11"
14'-0"	3562-57-5	3562-58	6'-2"
14'-6"	3562-57-5A	3562-58	6'-5"
15'-0"	3562-57-6	3562-58	6'-8"
15'-6"	3562-57-6A	3562-58	6'-11"
16'-0"	3562-57-7	3562-58	7'-2"
16'-6"	3562-57-7A	3562-58	7'-5"
17'-0"	3562-57-8	3562-58	7 -8"
17'-6"	3562-57-8A	3562-58	7'-11"
18'-0"	3562-57-9	3562-58	8'-2"

Hinged-Tongue Roadway Gate Arms

ENGINEERED AND CUSTOM BUILT TO MEET SPECIFIC REQUIREMENTS

Where overhead wires or structures would obstruct the gate arm in the raised, or clear, position it is often necessary to provide a special gate arm with a hinged tongue. Illustrated is a typical arm of this type.

Arms of 14′ to 44′, extended length, can usually be made to meet requirements if the clearance height does not necessitate a hinged tongue exceeding one-third of the total arm length.

Given the specific requirements we will submit a drawing for consideration depicting a recommended design. To enable us to perfect a suitable design the dimensions "C" and "D" must, of course, be known. If the obstruction is not directly above the mast, but is out over the roadway, then the distance from the mast as well as the height of the obstruction above the top of the signal foundation must also be known.

No general replacement parts list for hinged-tongue gate arms can be compiled for cataloging. However, drawings are furnished with each arm supplied, from which replacement parts can be ordered, if required.

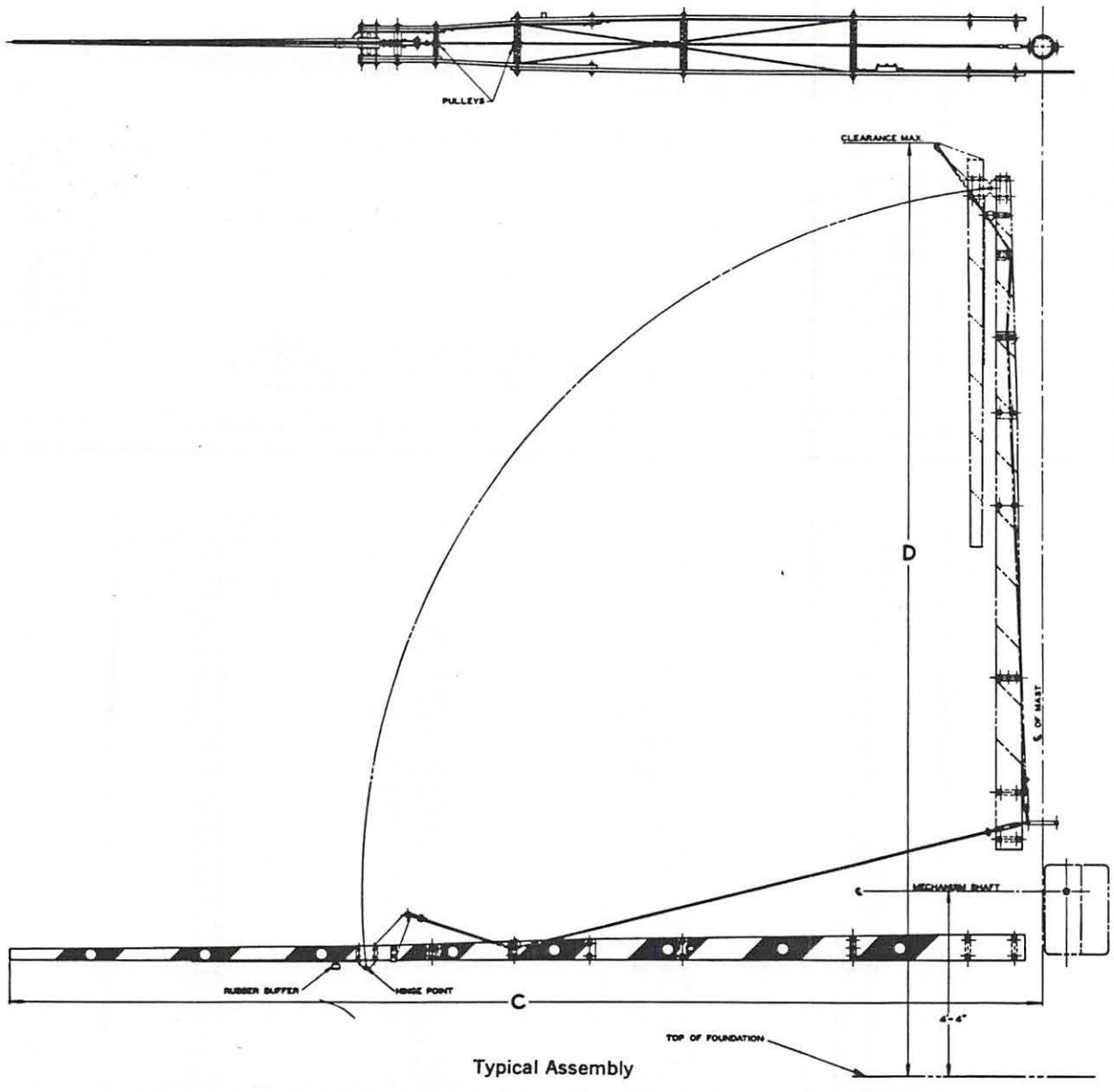

Typical Assembly

Buffer Leg
For Use With Roadway Arms 31' to 44' Long

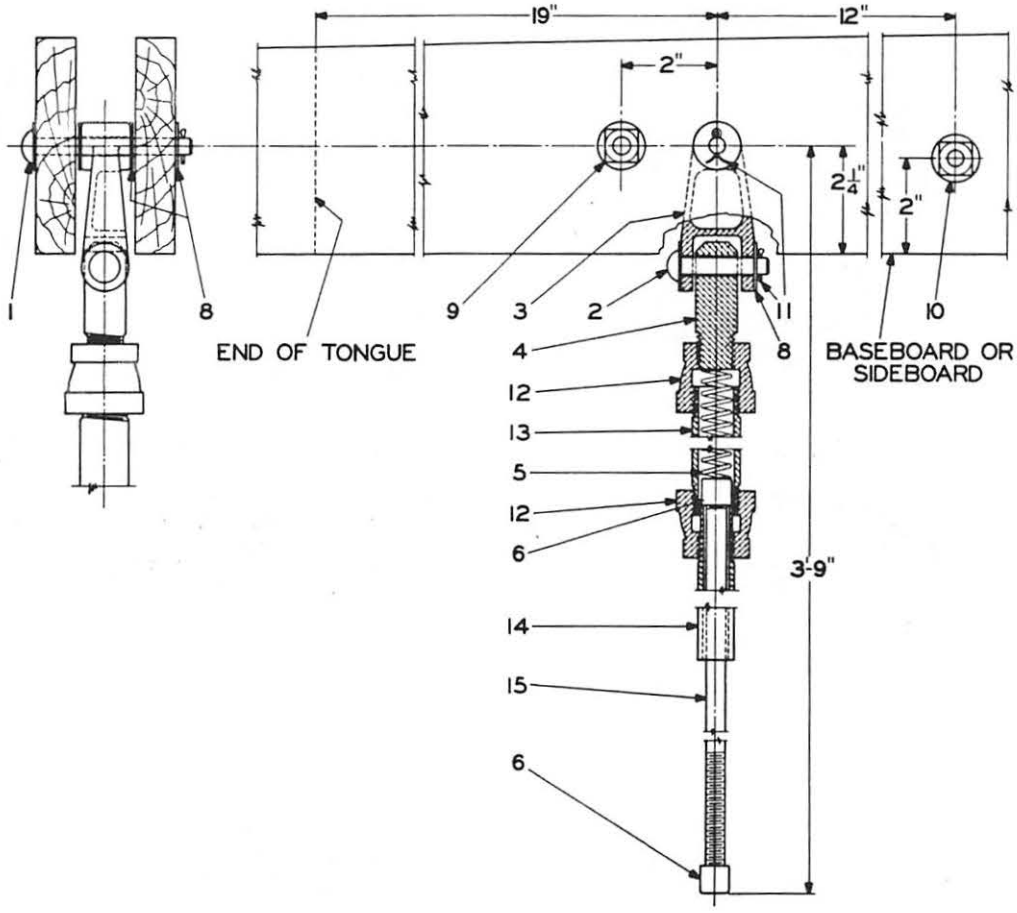

Ref. No.	Description	Piece No.
X	Buffer Leg Assembly Complete	3562-316A
X1	Same as Ref. X, Less Ref. No. 9 & 10	3562-316
	REPLACEMENT PARTS	
1	Rivet, ⅜" x 3¼" Lg. stl.	3562-133A
2	Rivet, ⅜" x 1⅞" Lg. stl.	3562-133
3	Yoke	3562-117B
4	Plug	3562-317
5	Compression Spring	3562-318
6	Pipe Cap., stl.	3562-319
8	Plain Washer, ⅜" I.D. x 1" O.D., stl.	
9	Mach. Bolt, ⅜"-16 x 3½ "Lg., sq. hd., sq. nut and plain Washer, stl.	
10	Through Stud, 5⅛" Lg., Aluminum	3562-66AK
11	Cotter Pin, 1/16" x ¾" Lg., stl.	
12	Reducer, ¾" x ½", Aluminum	
13	Pipe Nipple, ¾" x 12" Lg. T.B.E. Aluminum	
14	Pipe, ½" x 4½" Lg. T.O.E. Aluminum	3562-326
15	Pipe, ¼" x 2'-5" Lg. Aluminum	3562-320

WESTERN-CULLEN-HAYES, Inc.

Gate Light—Type 1573-50
Two-Way Indication—5⅜" Diameter Lenses

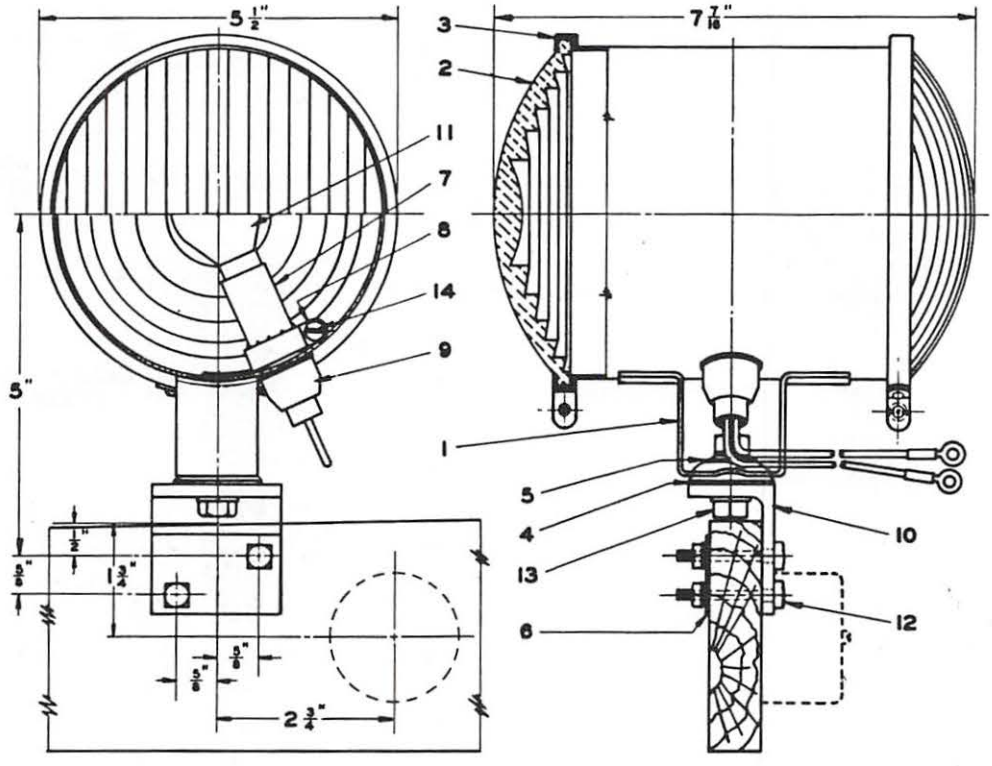

Ref. A

Type 1573-50 Gate Light is available with 30° Spreadlite or Optical Type Lenses. Horizontal and Vertical Alignment is adjustable. Aluminum construction limits weight at 2¼ lbs. S.C.B.B. lamp receptacle provided; lamp bulb not furnished unless specified.

Ref. No.	Description	Piece No.
T	Type 1573-50 Gate Light Complete, with 30° Spreadlite Lens (Red), Without Electric Lamp unless specified	1573-50
	REPLACEMENT PARTS	
1	Gate Light Body Assembly	1573-6
2	30° Spreadlite Lens, 5⅜" Diameter, Red	5330
3	Lens Ring	0500-106S-B
4	Adjusting Washer	1563-15
5	Washer, Steel	1563-16
6	Washer Plate	1563-5
7	Lamp Receptacle Assembly	6001-5
8	Clamp	1573-3
9	Insulator Bushing	1563-8
10	Mounting Bracket	1563-2A
11	Lamp, Incandescent, S.C.B.B., S-11 Bulb (Specify Voltage and Wattage)	
12	Mach. Bolt, ¼"-20 x 1½" Lg. sq. hd. steel and sq. nut	
13	Cap Screw, 5/16"-18 x 1¼" Lg. hex. hd. steel	
14	Mach. Screw, No. 8-32 x ⅝" Lg. rd. hd. brass and hex. nut	

Gate Light—Type 1585
Fresnel Lens

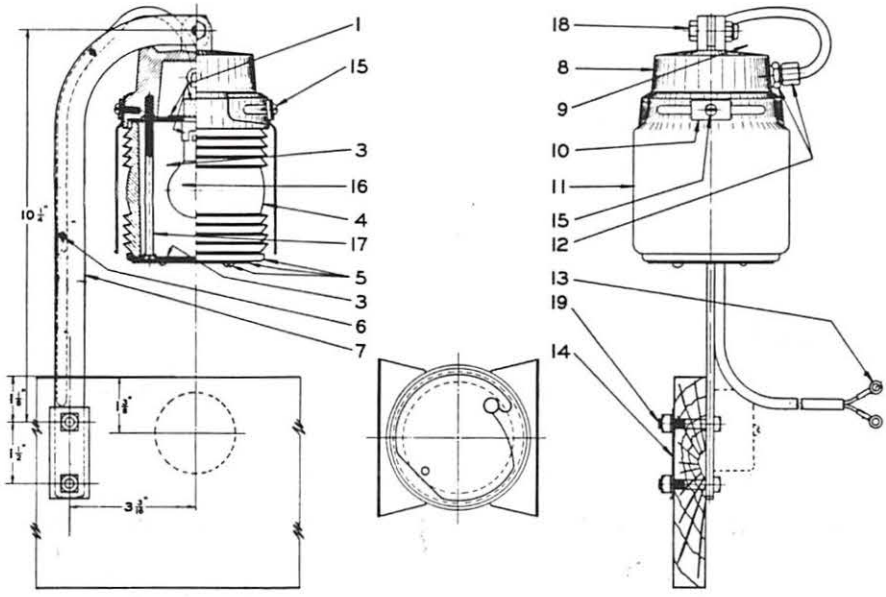

Type 1585 Gate Light is equipped with a 3⅝" diameter, red, 360° Fresnel Lens, shielded to provide indication to cross traffic only. A constant vertical axis is provided by the suspension mounting bracket. Wt. 2 lbs.; S.C.B.B. lamp receptacle; lamp bulb not furnished unless specified.

Ref. No.	Description	Piece No.
T2	Type 1585 Gate Light Complete with Mounting Bracket and Shields	1585
T3	Same as Ref. T2, Less Shields	1585-40
T4	Subassembly of Gate Light, with Shields, Less Mounting Bracket	1585-18AX
T5	Same as Ref. T4, Less Mounting Bracket and Shields	1585-40AX
T6	Subassembly of Mounting Bracket (Includes Items 6, 7, 14 and 19)	1585-15A
	REPLACEMENT PARTS	
1	Lamp Receptacle, Cord, Bracket Assembly	1585-12B
3	Gasket	1575-10
4	Fresnel Lens, 360°, Red, Plastic	1575-11P
5	Cover and Retaining Ring Subassembly	1585-11
6	Wire Retainer	1573-9
7	Mounting Bracket	1585-9
8	Housing	1585-3
9	¼"-20 Dualock Nut	90163
10	Shield Clamp	1585-7
11	Shield	1585-2
12	Compression Connector	1580-7
13	Terminal	31887
14	Washer Plate	1575-16
15	Mach. Screw, No. 10-24 x ½" Lg. rd. hd. brass	
16	Lamp, Incandescent, S.C.B.B., Type S-11 Bulb (Not furnished unless Specified)	
17	Stove Bolt, 3/16" (10-24) x 4" Lg. fl. hd. stl	
18	Pivot Screw	1585-14
19	Mach. Bolt, ¼"-20 x 1½" Lg. sq. hd., sq. nut and Internal Lockwasher	

WESTERN-CULLEN-HAYES, Inc.

Gate Arm Support
For Model 10 Signals
Types 3565-105, 3565-105X, 3565-205

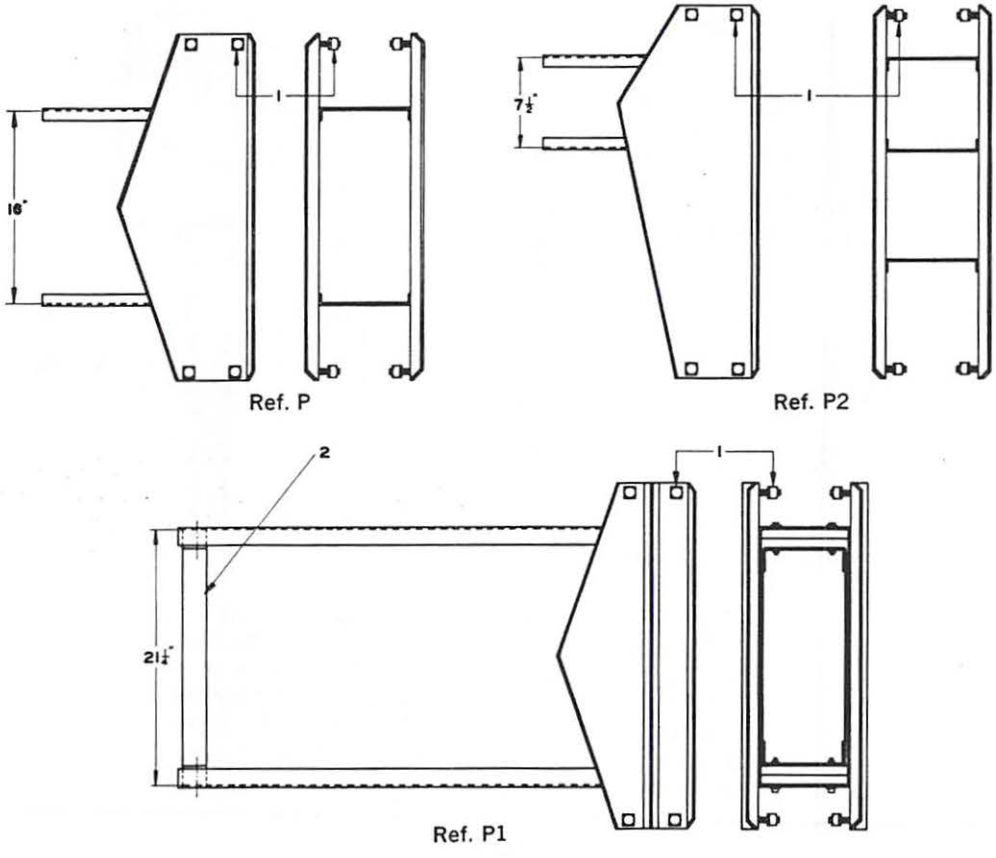

Ref. No.	Description	Piece No.
P	Gate Arm Support for use with Roadway Arms 14′ to 38′ Long Inclusive. (Includes Item 1)	3565-105
P1	Same as Ref. P, but for use with Roadway Arms 39′ to 44′ Long Inclusive. (Includes Items 1, 2, and shipping blocks)	3565-105X
P2	Same as Ref. P, but for use with Sidewalk Arms 18′ Long or Less. (Includes Item 1)	3565-205
	REPLACEMENT PARTS	
1	Mach. Bolt, ½″-13 x 1¾″ Lg. hex. hd., sq. nut and Lockwasher	
2	Inner Brace	3565-113

Mechanism Support
For Model 10 Signals
Type 3565-380A

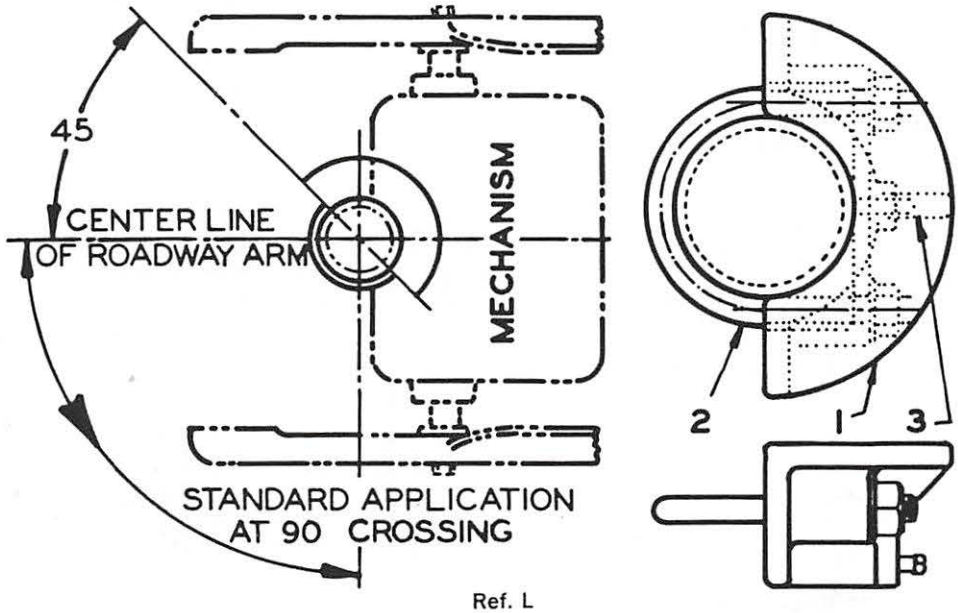

Ref. L

Because, on occasion, only one man is available to service a gate mechanism or damaged gate arm, we offer our No. 3565-380A Mechanism Support illustrated above. One such support complete is furnished with each mechanism.

The device may be secured permanently to the mast, or carried as part of a maintainer's servicing equipment.

Procedure is as follows—

Attach support to mast and against the under side of the mechanism.

Loosen mechanism clamp bolts.

Remove $\frac{3}{8}$" cap screws holding the conduit flange to the junction box base.

When traffic permits, open "Motor Up" and "Slot" circuits in Mechanism.

Swing mechanism and gate assembly away from tracks until arm is parallel to curb or highway edge.

After repair is completed, reverse procedure, being careful not to restore "Slot" and "Motor Up" wires until mechanism is restored to its normal position.

Ref. No.	Description	Piece No.
L	Mechanism Support Complete for 5" I.D. Pipe Mounting	3565-380A
	REPLACEMENT PARTS	
1	Mechanism Support only	3565-380
2	"U" Bolt for 5" I.D. Pipe Mounting	0700-276
3	Set Screw, $\frac{1}{2}$"-13 x $1\frac{3}{4}$" Lg. sq. hd. Cup Pt. Stl.	

Gate and Counterweight Arm For Model 10 Signals

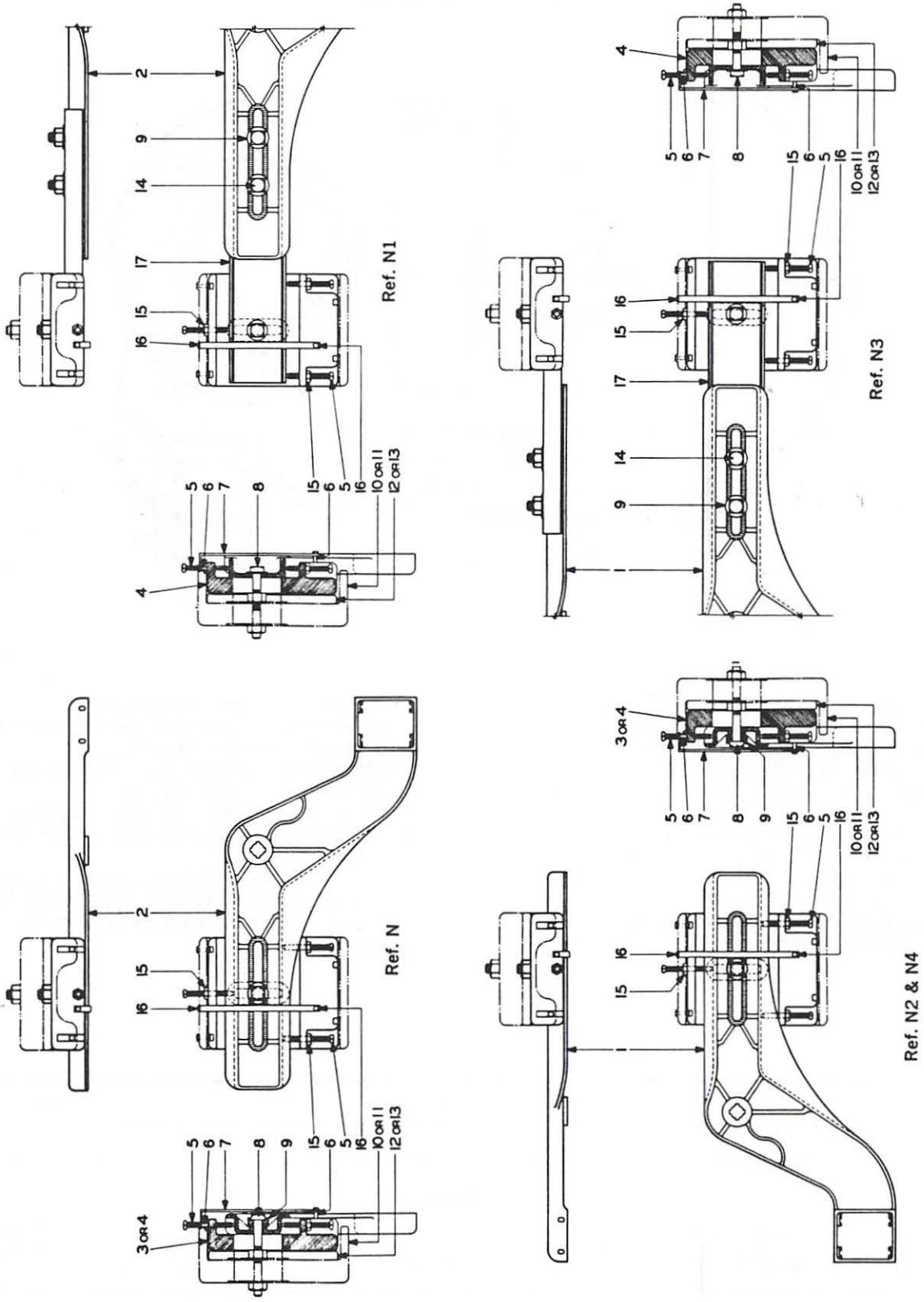

Gate and Counterweight Arm For Model 10 Signals

Ref. No.	Description	Piece No.
N	Gate and Counterweight Arm Complete for roadway arms 25′ to 30′ Lg., Inclusive for left side of mechanism. Specify length of arm	3565-102L
N1	Same as Ref. N, but for 31′ to 44′ Lg. Gate Arm	3565-102L
N2	Same as Ref. N, but for Right side and for 14′ to 30′ Lg. Gate arms inclusive	3565-103R
N3	Same as Ref. N2, but for 31′ to 44′ Lg. Gate Arm	3565-103R
N4	Gate and Counterweight arm complete for sidewalk arms 18′ Lg. or less	3565-103RX
	REPLACEMENT PARTS	
1	Right Hand Counterweight Arm only	3565-103
2	Left Hand Counterweight Arm only	3565-102
3	Adjustable Counterweight Complete—85 lbs.	3562-236A
4	Adjustable Counterweight Complete—160 lbs.	3562-226A
4A	Counterweight only—160 lbs.	3562-226
5	Set Screw, 5/8″-11 x 6″ Lg., sq. hd. Dog Point Stl	3562-211
6	Sleeve	3562-232
7	Retaining Strap	3562-233
8	Counterweight Mounting Bolt 6″ Lg. with hex. nut and plain washer	3562-182-6
8A	Same as Ref. 8, but 7″ Lg.	3562-182-7
8B	Same as Ref. 8, but 8″ Lg.	3562-182-8
8C	Same as Ref. 8, but 9″ Lg.	3562-182-9
8D	Same as Ref. 8, but 10″ Lg.	3565-182-10
9	Clamp Washer	3565-104
10	Counterweight—100 lbs.	3562-229
11	Counterweight—200 lbs.	3562-230
12	Counterweight—25 lbs.	3562-228
13	Counterweight—50 lbs.	3562-227
14	Mach. Bolt, 1″-8 x 3½″ Lg. sq. hd. stl. and 2 plain washers	
15	Hex. Nut 5/8″-11, steel	
16	Cap Screw, 3/8″-16 x 1¾″ Lg., hex. hd. stl.	
17	Counterweight Extension Arm (For Ref. N1 and N3 only)	3565-174

WESTERN-CULLEN-HAYES, Inc.

Gate Support Arm and Sidewalk Arm Bracket For Model 10 Signals

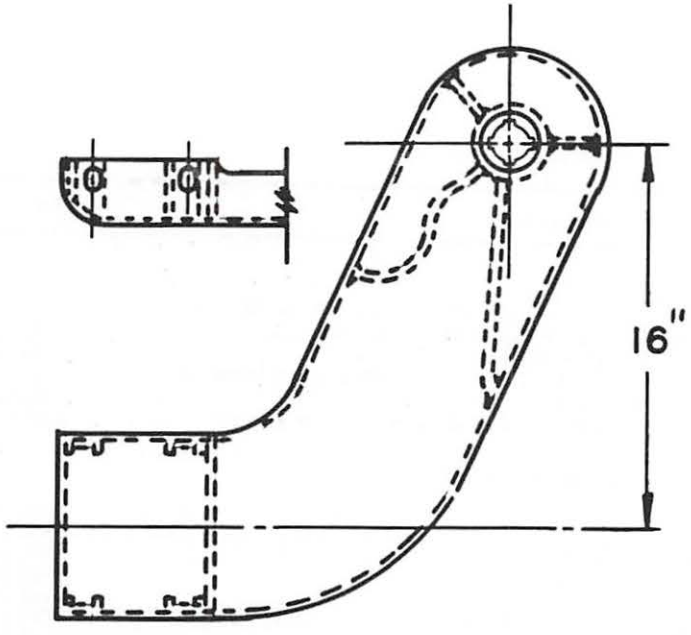

Ref. N5

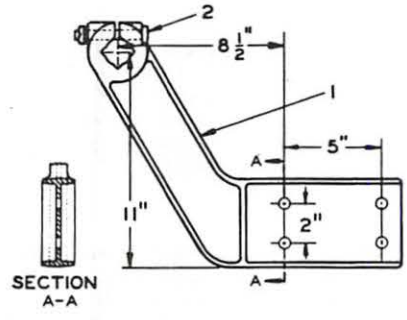

Ref. V

Ref. No.	Description	Piece No.
N5	Gate Support Arm Complete, for use with Roadway Arm 14′ to 24′ Long Inclusive	3565-101
V	Sidewalk Arm Bracket Complete, for use with Sidewalk Arm 18′ Long or Less	3565-111
	REPLACEMENT PARTS	
1	Sidewalk Arm Bracket (Casting only)	3565-111A
2	Mach. Bolt, ½"-13 x 3½" Lg. sq. hd. stl., hex. nut and Lock Washer	

Junction Box Cross Arm For Two-Way Indication Type 960-3 and 5

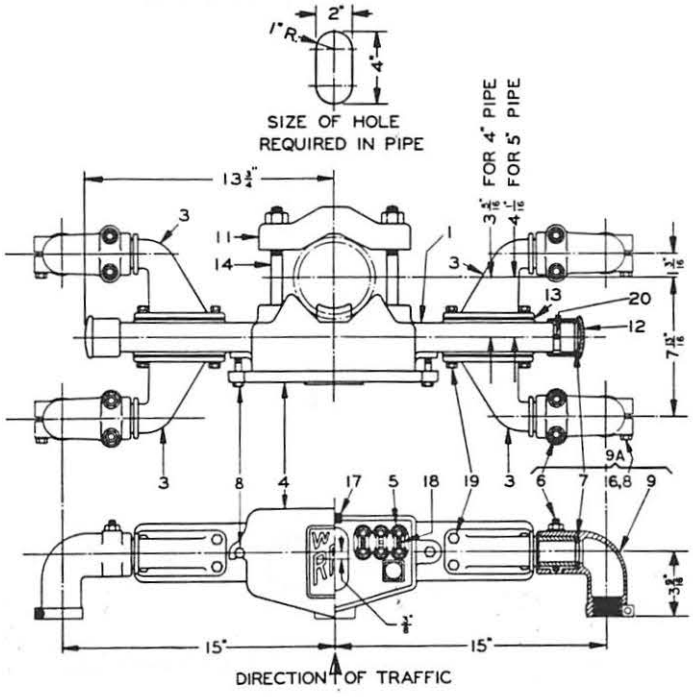

Ref. E

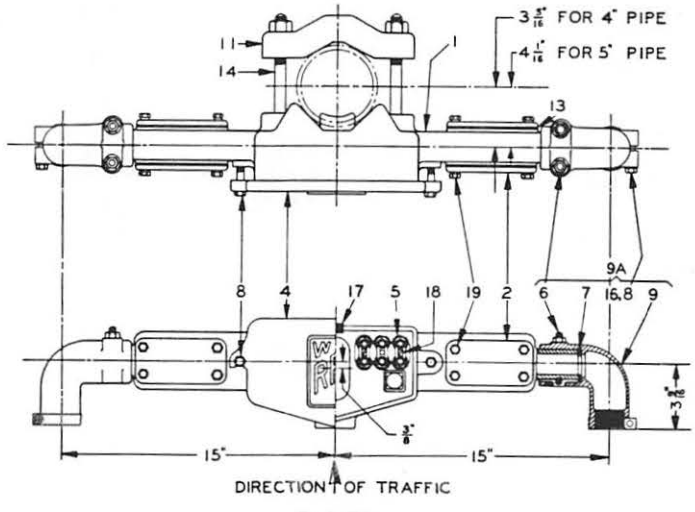

Ref. E1

Ref. No.	Description	Piece No.
E	Junction Box Cross Arm Assembly for Mounting Four 970-201 Light Units. (Specify Pipe Size)	960-5
E1	Same as Ref. E but for Two Light Units	960-3

For Replacement Parts Listing see Pages 3-44 and 3-45.

WESTERN-CULLEN-HAYES, Inc.

Type 960-83 Junction Box Cross Arm For One-Way Indication

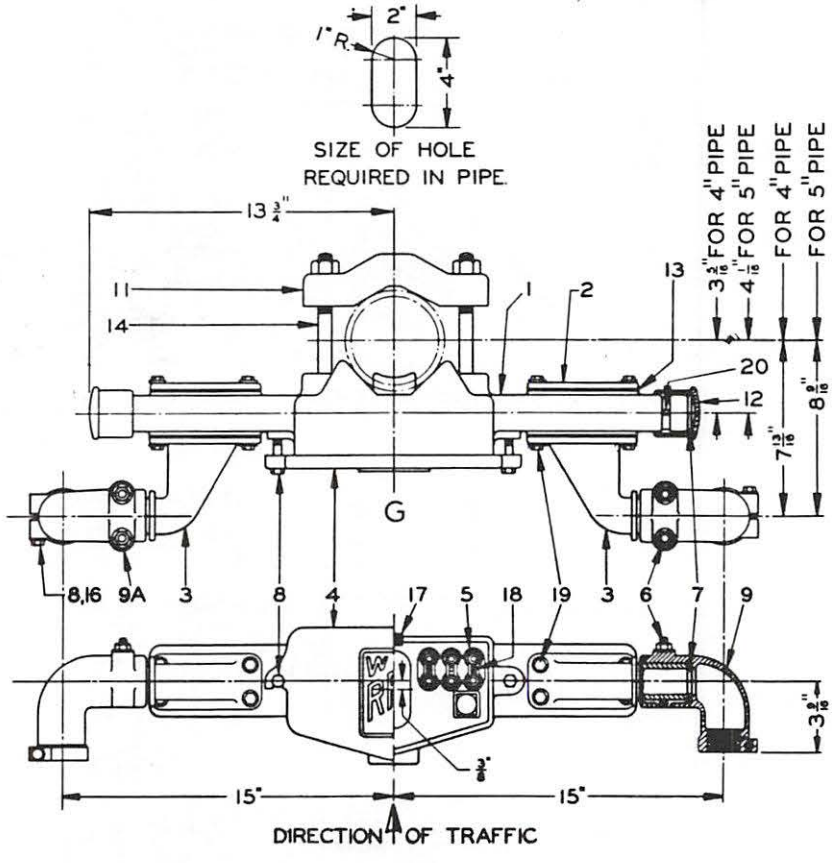

Ref. E2

Ref. No.	Description	Piece No.
E2	Junction Box Cross Arm Assembly for Mounting Two 970-201 Light Units. (Specify Pipe Size)	960-83

For Replacement Parts Listing see Pages 3-44 and 3-45.

Type 960-88 Junction Box Cross Arm For Two-Way Indication

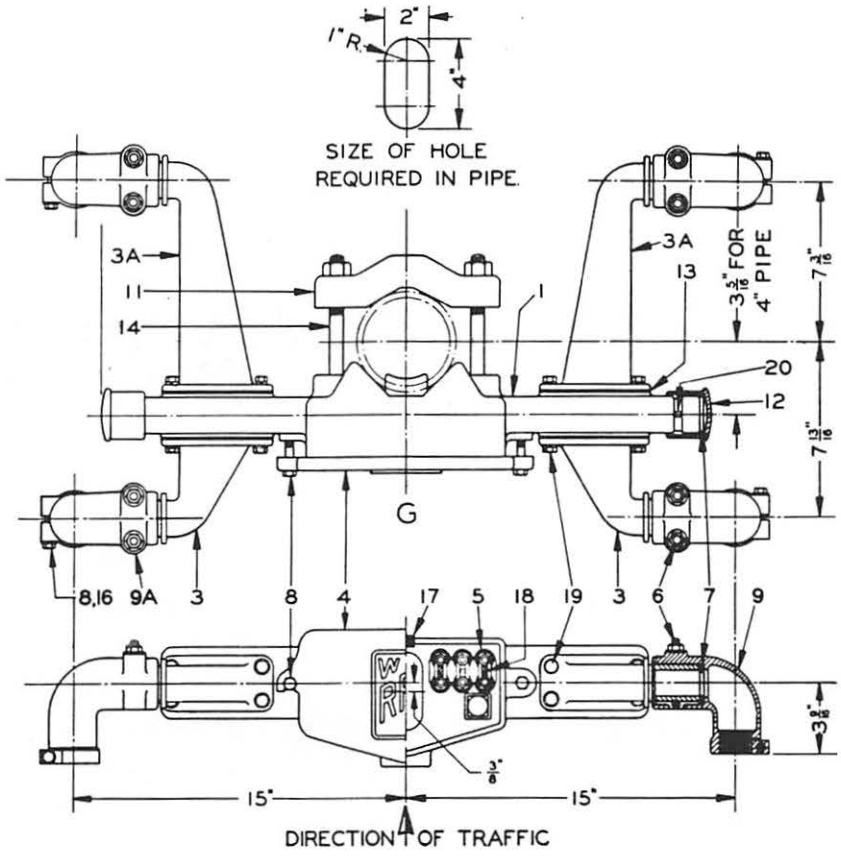

Ref. E3

Ref. No.	Description	Piece No.
E3	Junction Box Cross Arm Assembly for Mounting Four 970-201 Light Units. (Specify Pipe Size).....	960-88

For Replacement Parts Listing see Pages 3-44 and 3-45.

WESTERN-CULLEN-HAYES, Inc.

Type 960-5XX Junction Box Cross Arm For Two-Way Indication

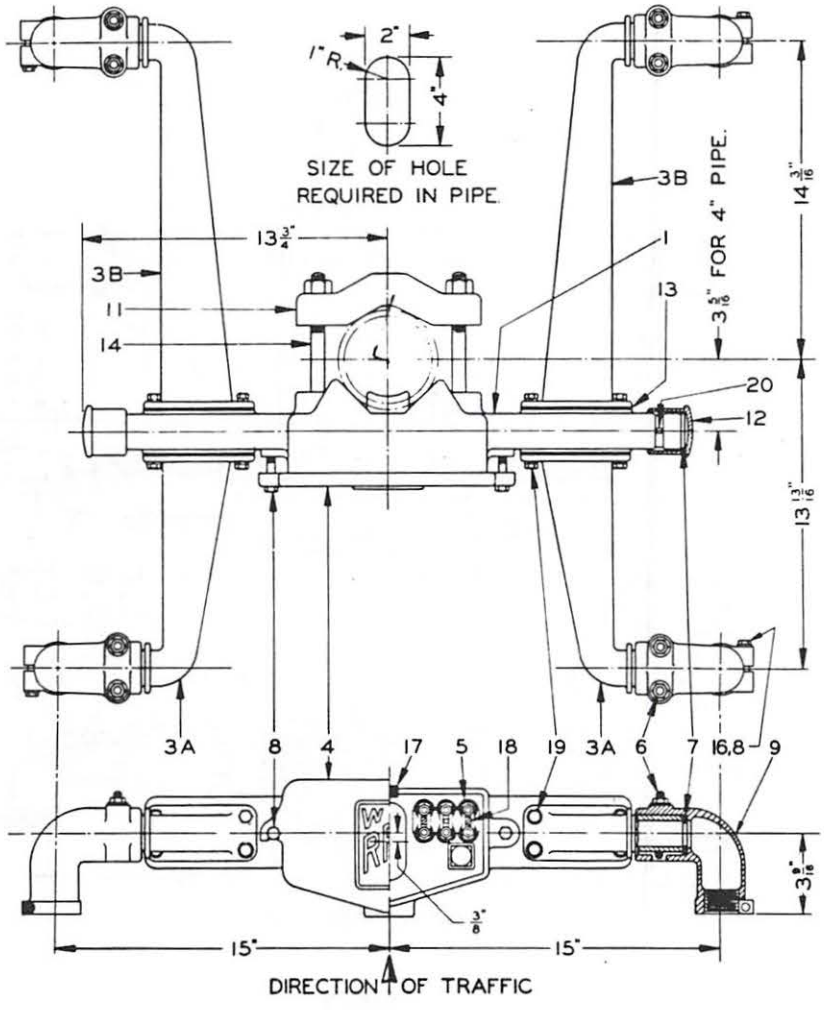

Ref. E4

Ref. No.	Description	Piece No.
E4	Junction Box Cross Arm Assembly for Mounting Four 970-201 Light Units (For 4" I.D. Pipe Mounting)	960-5XX

For Replacement Parts Listing see Pages 3-44 and 3-45.

Type 960-54 Junction Box Cross Arm For Two-Way Indication

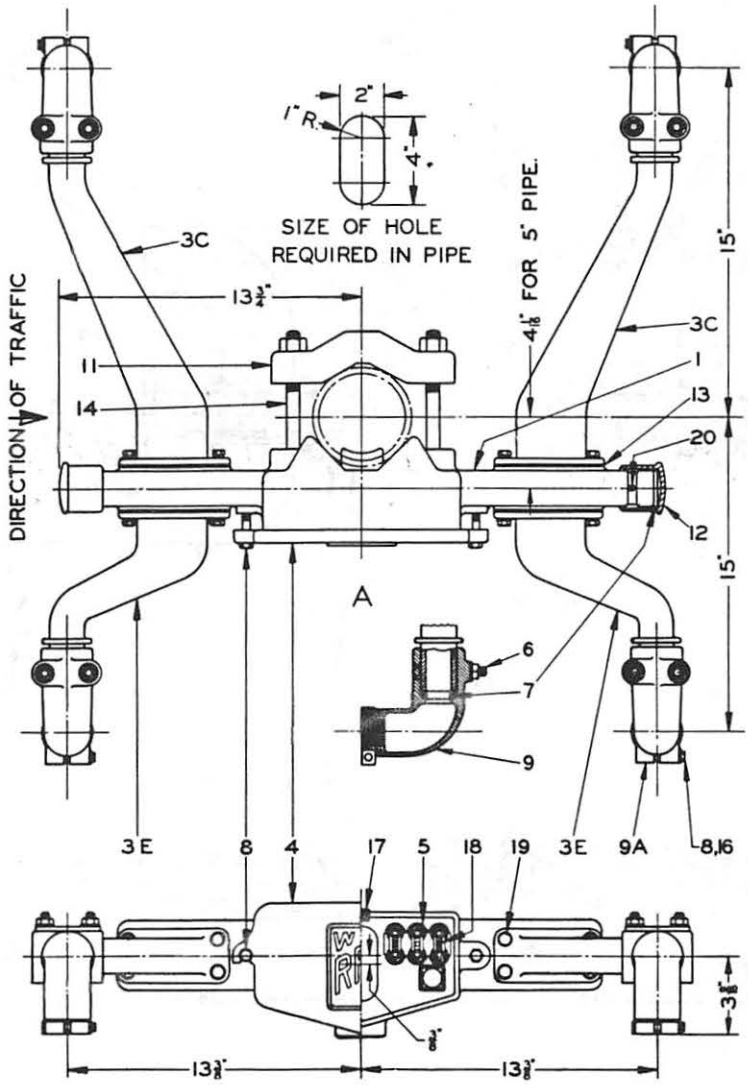

Ref. E5

Ref. No.	Description	Piece No.
E5	Junction Box Cross Arm Assembly for Mounting Four 970-201 Light Units (For 5" I.D. Pipe Mounting)	960-54

For Replacement Parts Listing see Pages 3-44 and 3-46.

Type 960-74R Junction Box Cross Arm For Two-Way Indication

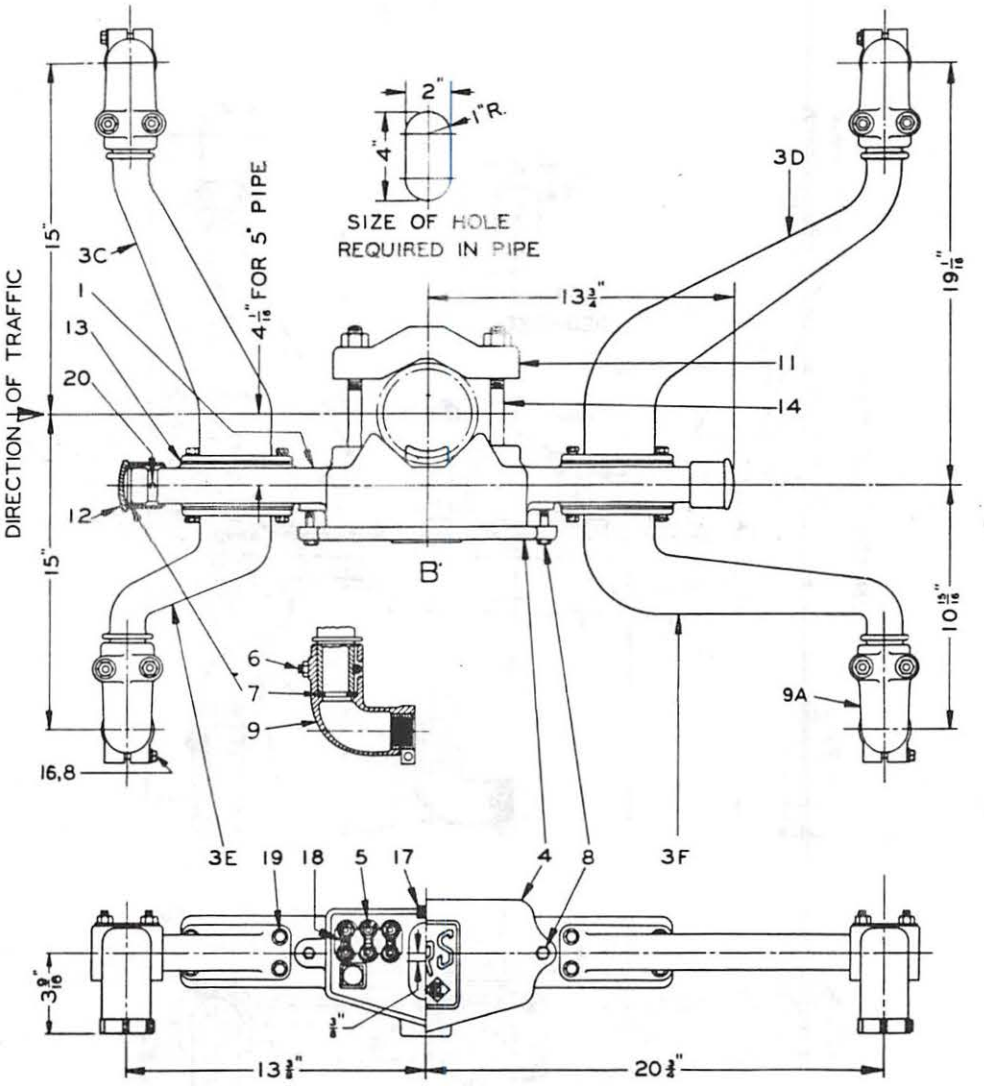

Ref. E6

Ref. No.	Description	Piece No.
E6	Junction Box Cross Arm Assembly for Mounting Four 970-201 Light Units (For 5" I.D. Pipe Mounting)	960-74R

For Replacement Parts Listing see Pages 3-44 and 3-45.

Type 960-84 Junction Box Cross Arm For Two-Way Indication

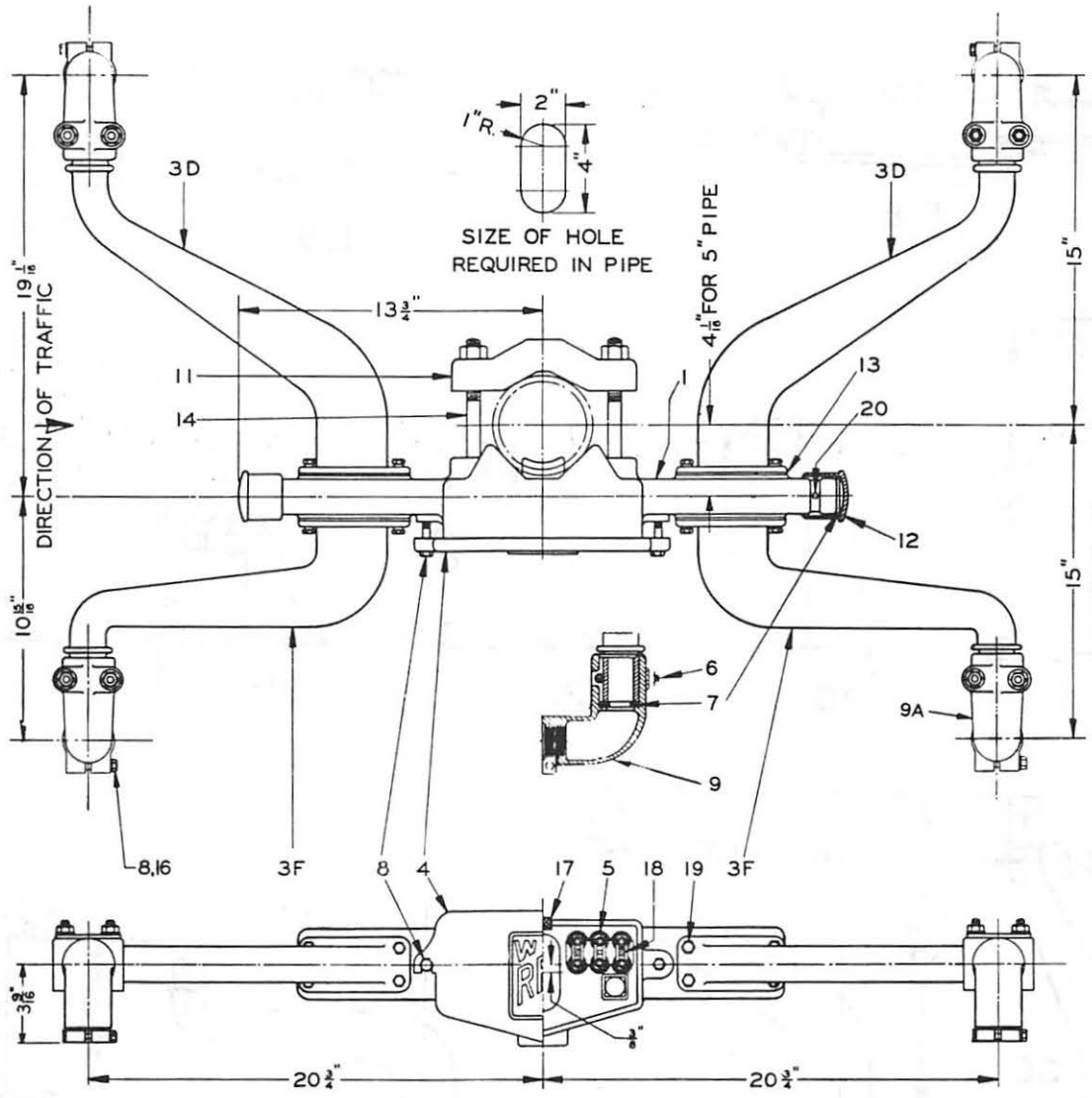

Ref. E7

Ref. No.	Description	Piece No.
E7	Junction Box Cross Arm Assembly for Mounting Four 970-201 Light Units (For 5" I.D. Pipe Mounting)	960-84

For Replacement Parts Listing see Pages 3-44 and 3-45.

Junction Box Cross Arms

REPLACEMENT PARTS LISTING FOR PAGES 3-37 TO 3-43

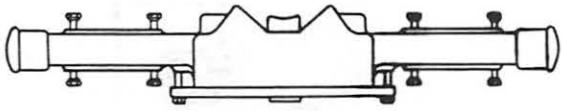

E 8

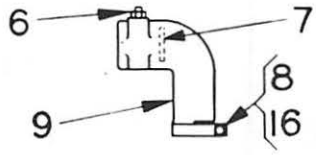

E 9

2

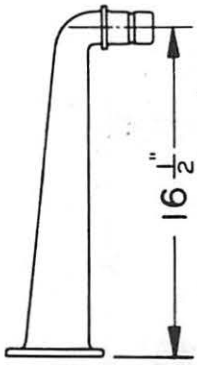

3B

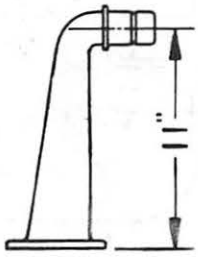

3G

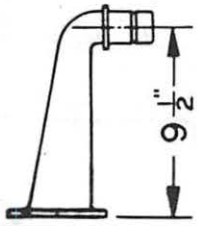

3A

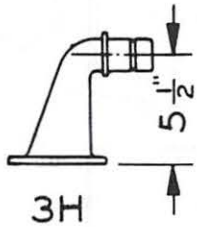

3H

3

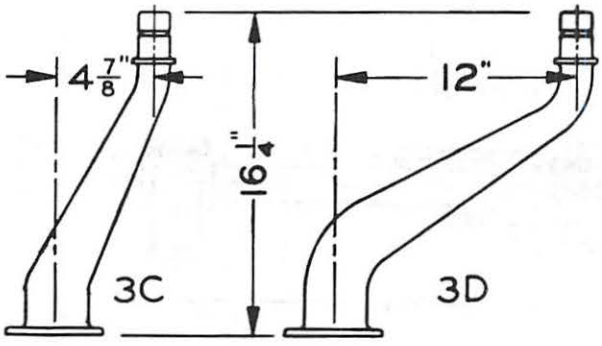

3C 3D

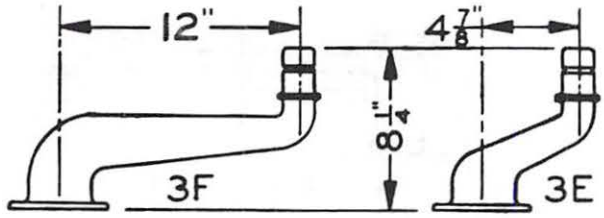

3F 3E

Junction Box Cross Arms

REPLACEMENT PARTS LISTING FOR PAGES 3-37 TO 3-43

Ref. No.	Description	Piece No.
E8	Sub-assembly of Junction Box Cross Arm (Includes Items 1, 4, 5, 7, 12, 15, 16, 18, 19 and 20)	950A-62
E9	Sub-assembly of Supporting Bracket (Includes Items 6, 7, 8, 9 and 16)	960A-163
	REPLACEMENT PARTS	
1	Junction Box Cross Arm (Casting only)	950A-22
2	Cover Plate	950A-39
3	Bracket 3½"	950A-57
3A	Bracket 9½"	950A-47
3B	Bracket 16½"	950A-46
3C	Bracket 16¼" x 4⅞"	950A-67
3D	Bracket 16¼" x 12"	950A-77
3E	Bracket 8¼" x 4⅞"	950A-66
3F	Bracket 8¼" x 12"	950A-76
3G	Bracket 11"	950A-37
3H	Bracket 5½"	950A-36
4	Cover, Complete with Packing	950A-21
5	Terminal Block, Complete	2506-106
6	"U" Bolt, ⅜"-16, Complete with Nuts	950-31
7	Gasket, Sponge Rubber	950-28
8	Cap Screw, ⅜"-16 x 2" Lg. hex. hd., stl.	
9	Supporting Bracket	960A-131
11	Adaptor Clamp	950A-34
12	Cap	950A-29
13	Gasket, Cork	950-27
14	Mach. Bolt, ⅝"-11 x 7½" Lg. sq. hd. stl. and hex. nut for 5" Pipe Mounting	
14A	Same as Ref. 14, but for 4" Pipe Mounting	
16	⅜" Lock Washer	
17	Torchwick Packing ⅜" Dia. x 27" Lg.	
18	Mach. Screw, No. 10-32 x ⅝" Lg. fil. hd., stl.	
19	Cap Screw, ⅜"-16 x ⅞" Lg. hex. hd.. stl. and Lock Washer	
20	Set Screw, ¼"-20 x ½" Lg., sq. hd. Cup Pt., stl.	

WESTERN-CULLEN-HAYES, Inc.

Type 2149 Junction Box Clamp Type Base

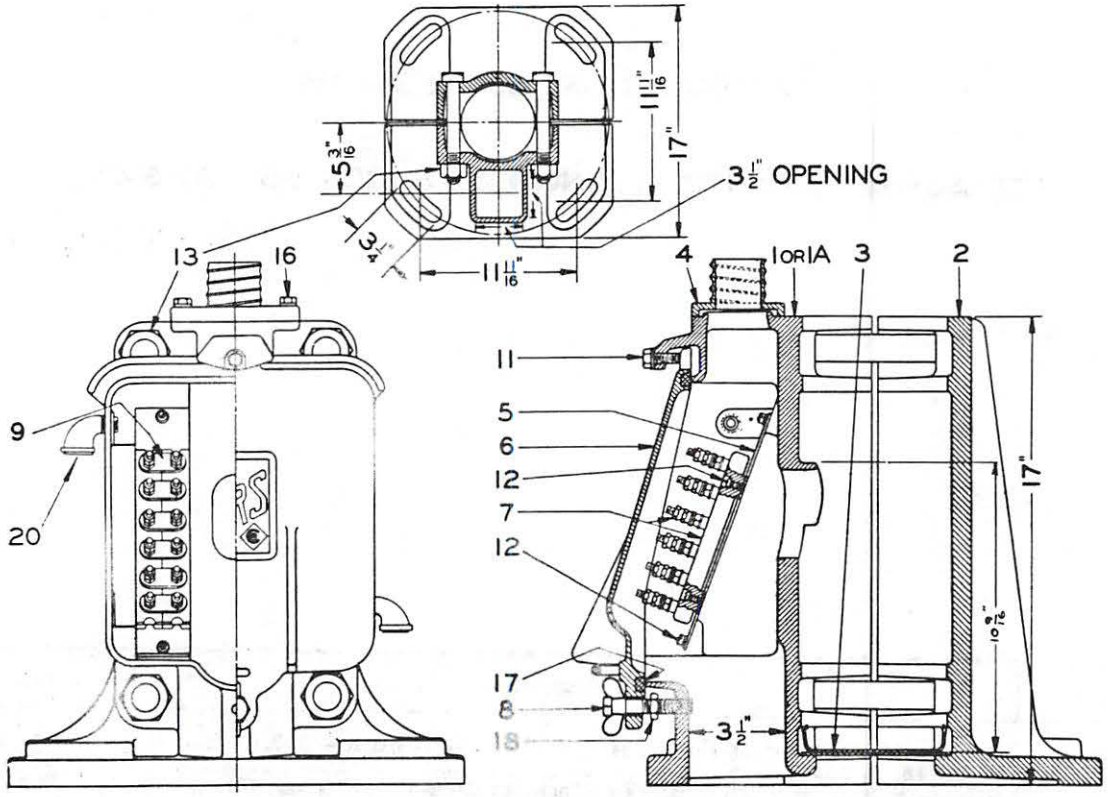

Ref. B9

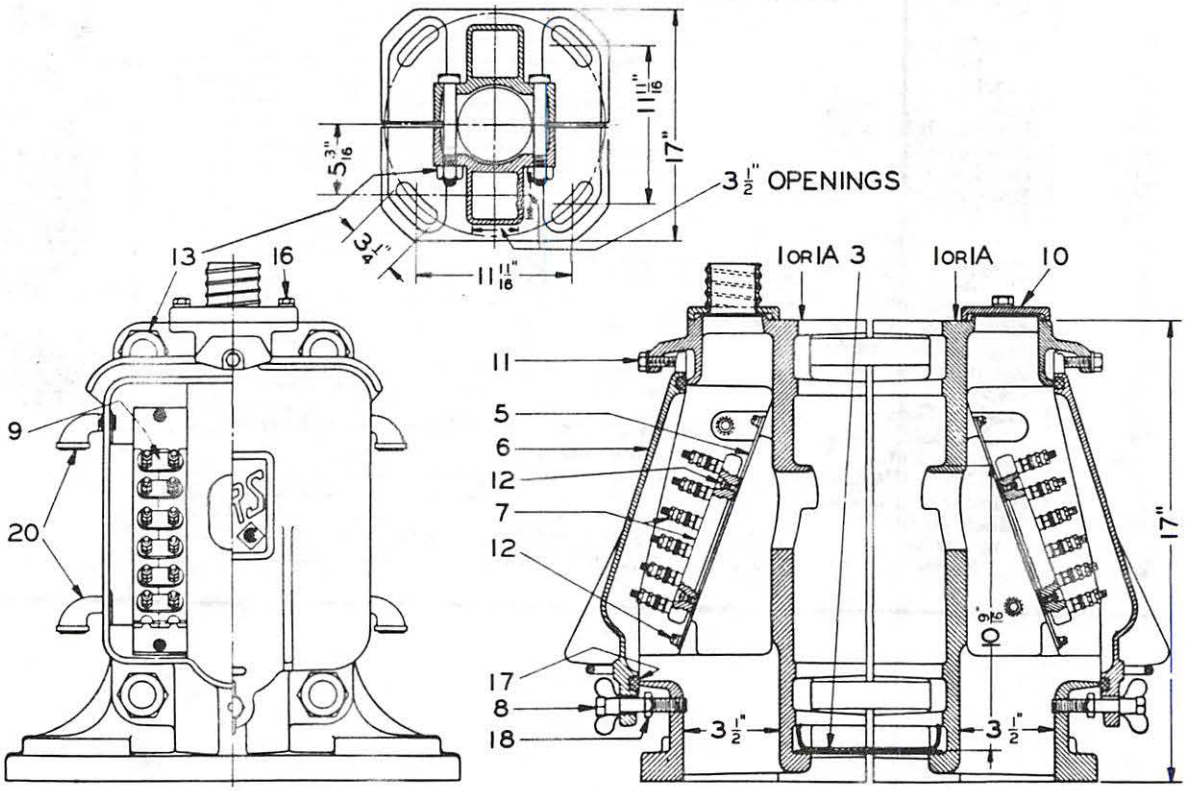

Ref. B11

Type 2149 Junction Box Clamp Type Base

Type 2149 Bases are regularly furnished with conduit flange (Ref. 4) for 1½" flexible metalic conduit unless specified for 2" conduit. A cover (Ref. 10A) tapped 1½" pipe thread is furnished for "sealtite" connector.

Ref. No.	Description	Piece No.
B9	Type 2149 Split base with one Junction Box half with 24 binding posts, ventilators and conduit flange. (Cast Iron)	2149-111C
B10	Same as Ref. B9, less ventilators	2149-111
B11	Same as Ref. B9, but with two Junction Box halves	2149-112E
B12	Same as Ref. B11, less ventilators	2149-112
	REPLACEMENT PARTS	
1	Junction Box Half, (Without Terminals, Cover, Ventilators and Fittings, for Ref. B10 and B12)	2149-15
1A	Same as Ref. 1, but for Ref. B9 and B11	2149-15C
2	Split Base Half	2149-13
3	Pipe Shield	2149-24
4	Conduit Flange for 1½" Conduit	2149-117
4A	Conduit Flange for 2" Conduit	2149-17
5	Terminal Mounting Plate	2149-25
6	Cover with Packing Ref. 17	2149-16
7	Terminal Strip (12 post)	2508-106
8	Thumb Screw	2149-18A
9	Connector	7323-2
10	Blank Cover	2149-22
10A	Cover Plate, tapped 1½" pipe thread	2149-22G
11	Cap Screw, ⅜"-16 x ⅞" Lg. hex. hd. stl. and plain washer	
12	Mach. Screw, ¼"-20 x ⅝" Lg. fil. hd. stl.	
13	Mach. Bolt, 1"-8 x 7½" Lg. sq. hd. stl. and hex. nut	
14	Pipe Plug, ¾" Std.	
15	Pipe Reducer Bushing, 1¼" x ¾" Std.	
16	Cap Screw, ⅜"-16 x 1⅛" Lg., hex. hd., stl. and lock washer	
17	Packing, Flax or Jute, ⅜" sq. x 3'-2½" Lg.	
18	Hex. Jam Nut, ½"-13 Std., stl.	
19	Pipe Plug, 1¼" Std.	
20	Ventilator	1143-16

WESTERN-CULLEN-HAYES, Inc.

Upper and Lower Supporting Brackets For Offset Mast Type Model 10 Signals

Type 3565-65 Type 3565-67 Type 3565-367

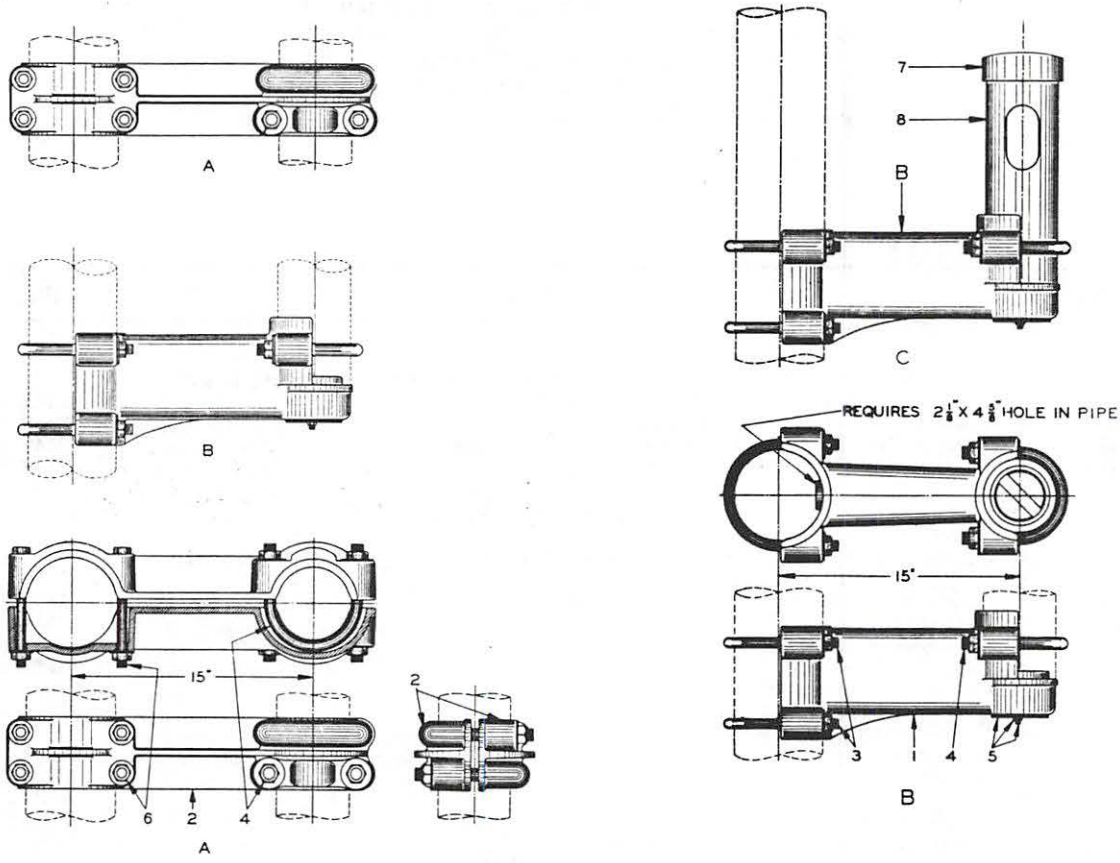

Ref. No.	Description	Piece No.
A	Upper Supporting Bracket Assembly	3565-65
B	Lower Supporting Bracket Assembly	3565-67
C	Supporting Bracket and Dowel Mast Assembly	3565-367
	REPLACEMENT PARTS	
1	Upper Bracket Casting Only	3565-69
2	Upper Bracket Casting Only	3565-68
3	"U" Bolt for 5" I.D. Pipe	1264-5
4	"U" Bolt for 4" I.D. Pipe	3565-163
5	Wire Opening Cover and Clamp Subassembly	3565-162A
6	Mach. Bolt, ⅝"-11 x 7" Lg. Sq. Hd. Steel, Hex. Steel Nut and Plain Washer	
7	Tap-on Pinnacle	110A-6
8	Dowel, 4" I.D. x 14" Lg. (May be turned in Socket to any Angle)	714-8

Upper and Lower Supporting Brackets For Offset Mast Type Model 10 Signals Type 3565-165 Type 3565-167 Type 3565-267

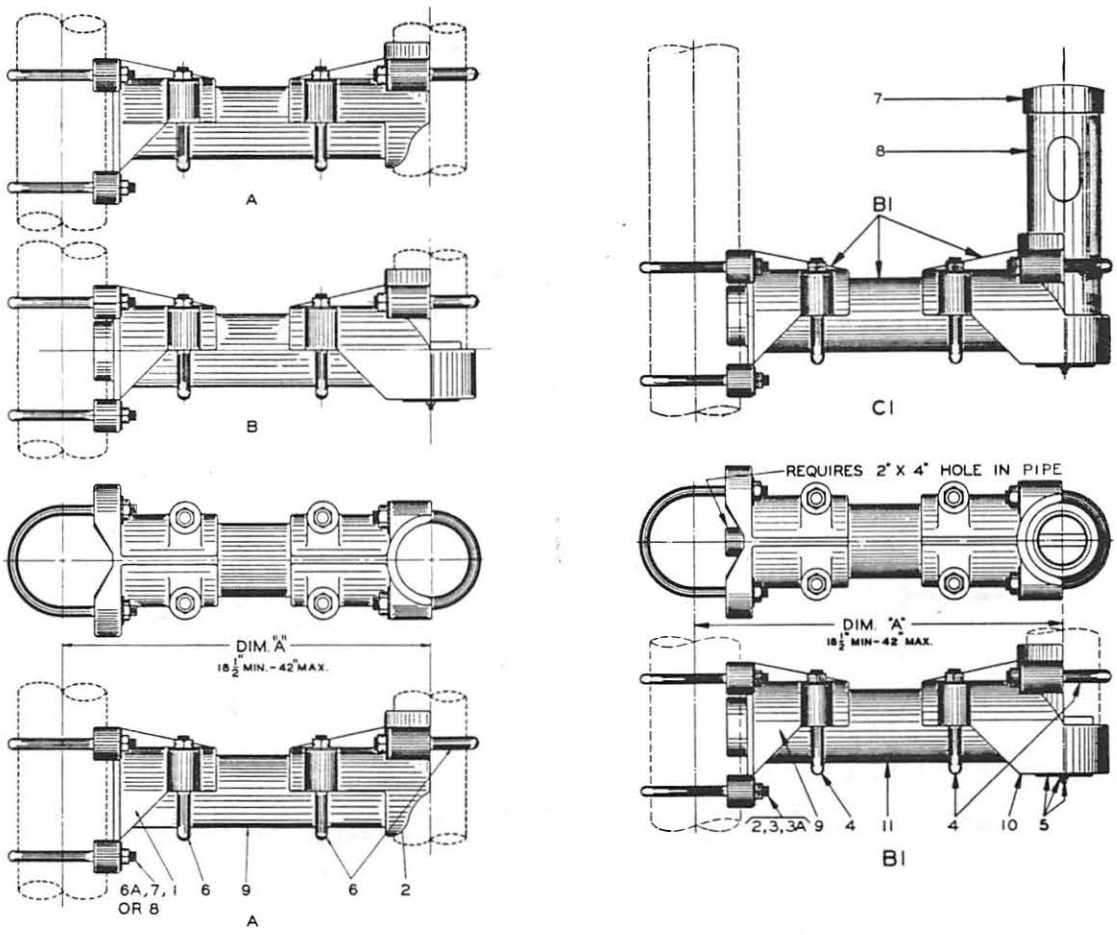

Ref. No.	Description	Piece No.
A	Upper Supporting Bracket Assembly (Specify Dimension "A" in inches)	3565-165
B	Lower Supporting Bracket Assembly (Specify Dimension "A" in inches)	3565-167
C	Supporting Bracket and Dowel Mast Assembly (Specify Dimension "A" in inches)	3565-267
	REPLACEMENT PARTS	
1	Inner Support	3565-169
2	Outer Support	3565-164
3	Inner Support	3565-168
4	Outer Support	3565-166
5	Wire Opening Cover and Clamp Sub-Assembly	3565-162A
6	"U" Bolt for 4" I.D. Pipe	3565-163
6A	"U" Bolt for 4" I.D. Pipe	1264-4
7	"U" Bolt for 5" I.D. Pipe	1264-5
8	"U" Bolt for 6" I.D. Pipe	1264-6
9	Pipe, 4" I.D. (Length as Required)	
10	Dowel, 4" I.D. x 14" Lg. (May be turned in Socket to any Angle)	714-8
11	Tap-on Pinnacle	110A-6

WESTERN-CULLEN-HAYES, Inc.

Extension Brackets For Crossing Signs Type 3366-40 Type 3366-140

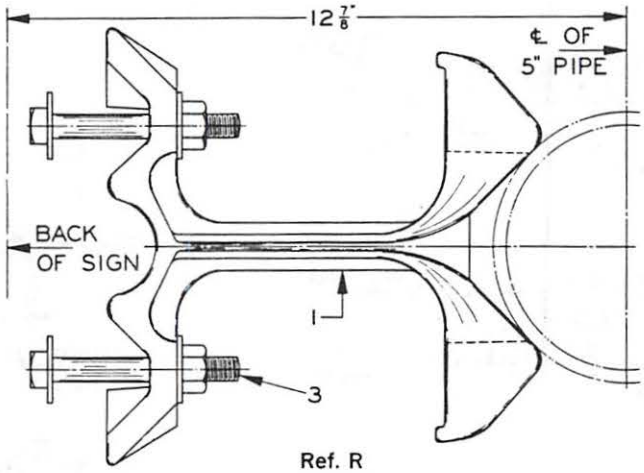

Ref. R

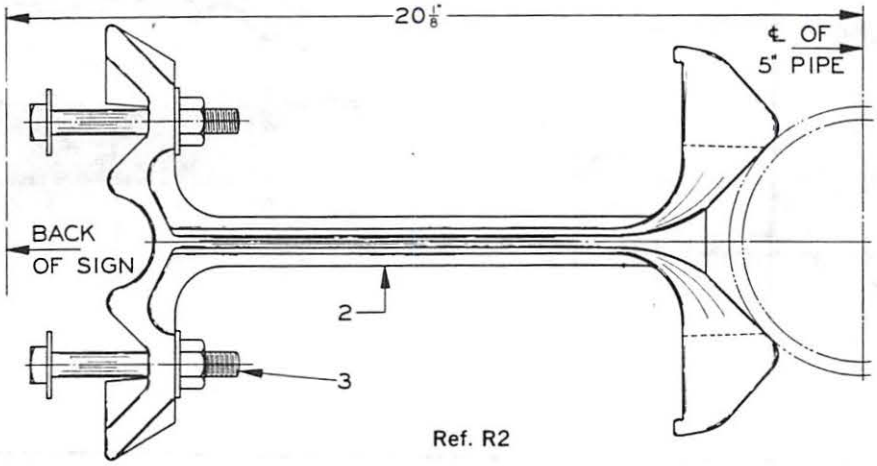

Ref. R2

Ref. No.	Description	Piece No.
R	Type 3366-40 Extension Bracket (Cast Iron) Complete with Bolts, Nuts and Washers	3366-40
R1	Same as Ref. R, but aluminum	3366A-40
R2	Type 3366-140 Extension Bracket (Cast Iron) Complete with Bolts, Nuts and Washers	3366-140
R3	Same as Ref. R2, but aluminum	3366A-140
	REPLACEMENT PARTS	
1	Extension Bracket, gray iron casting only	3366-41
1A	Same as Ref. 1, but aluminum casting	3366A-41
2	Extension Bracket, gray iron casting only	3366-141
2A	Same as Ref. 2, but aluminum casting	3366A-141
3	Mach. Bolt, ½"-13 x 4" Lg., sq. hd., stl., hex. nut and 2 Plain Washers	

WESTERN · CULLEN · HAYES

model 10 signal featuring the 3590 series gate mechanism

a quality, long life mechanism
you can depend on for maximum
reliability & minimum maintenance

WC Hayes
WESTERN-CULLEN-HAYES, Inc.
2700 West 36th Place • Chicago, Illinois 60632
Telephone: 312/254-9600 • Telex 25-3206

WESTERN·CULLEN·HAYES
signal products

Western-Cullen-Hayes has more than 80 years of experience in Highway-Crossing equipment, plus a reputation for the most dependable products in the field. In addition to our 3590 Series Gate mechanisms and our Model 10 Crossing Signal, we can meet your needs with other Signaling products.

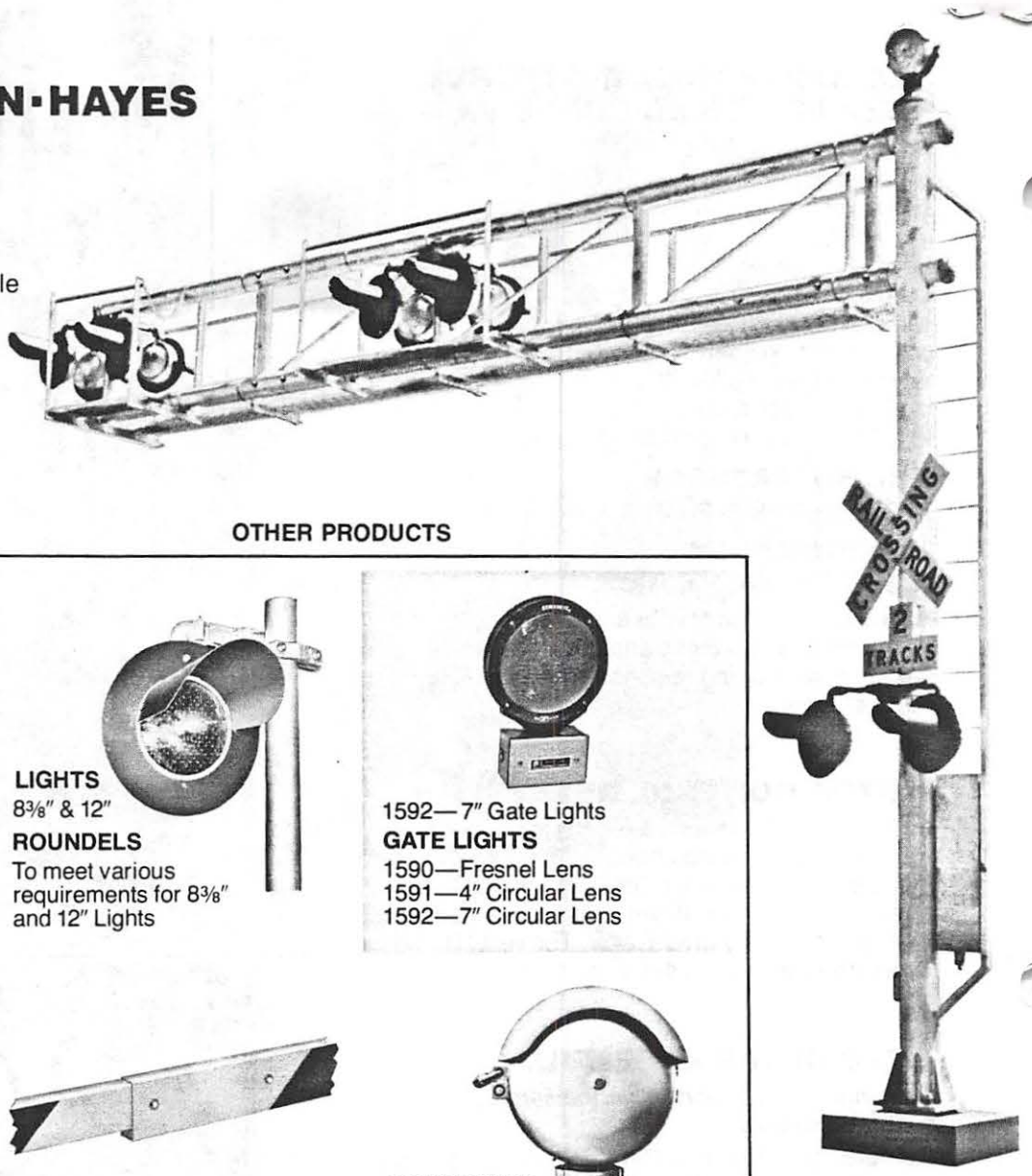

GATE MECHANISM ORDERING REFERENCES

3590-131 3 Power Wire Control
3593-131 2 Power Wire Control
3590-132 3 Power Wire Control with sidewalk shaft
3593-132 2 Power Wire Control with sidewalk shaft

ACCESSORIES

3590-K9 Vertical Torque Wrench Kit
3562-210 Torque Adjusting Scale
38-0045-287 Heater
3590-1650 All Temp. Lubricating Grease for Gears

OTHER PRODUCTS

LIGHTS
8⅜" & 12"

ROUNDELS
To meet various requirements for 8⅜" and 12" Lights

1592—7" Gate Lights

GATE LIGHTS
1590—Fresnel Lens
1591—4" Circular Lens
1592—7" Circular Lens

SIGNS
Cross Buck
No. of Track
Advance Warning Sign

GATE ARMS
Wooden
Fiberglass
Aluminum/Fiberglass Combination
Breakaway Adapters

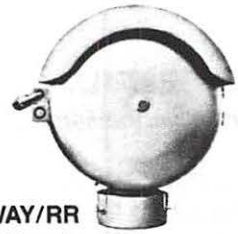

HIGHWAY/RR
0333—Crossing Bell

CROSSING WARNING SYSTEMS
Material, Engineering, or Completely Wired Cases

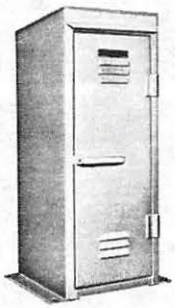

OTHER PRODUCTS
Lighting Transformers
Rectifiers
Terminal Strips
Lightning Arresters
Test Instruments
Rail Bonding Drills and Bits
Track Drills and Bits

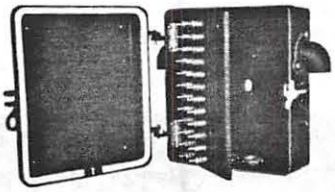

TERMINAL BOXES
Fiberglass Battery Boxes
Pole Mount Instrument Cases
Pole Mount Terminal and Arrester Boxes

OTHER W-C-H SIGNAL SUPPORT STRUCTURES

Walkout Cantilever pictured above meets applicable AAR & AASTHO Specifications.

Rotatable Cantilever meets AAR Recommendations.

Signal Bridges —Standard or Custom designs.

Flashing Light Signals —Standard of the industry for many years.

For further information write or call 312/254-9600 or your W-C-H Representative.

WESTERN-CULLEN-HAYES, Inc.
2700 West 36th Place • Chicago, Illinois 60632
Telephone: 312/254-9600 • Telex 25-3206

Printed in U.S.A.

M M882

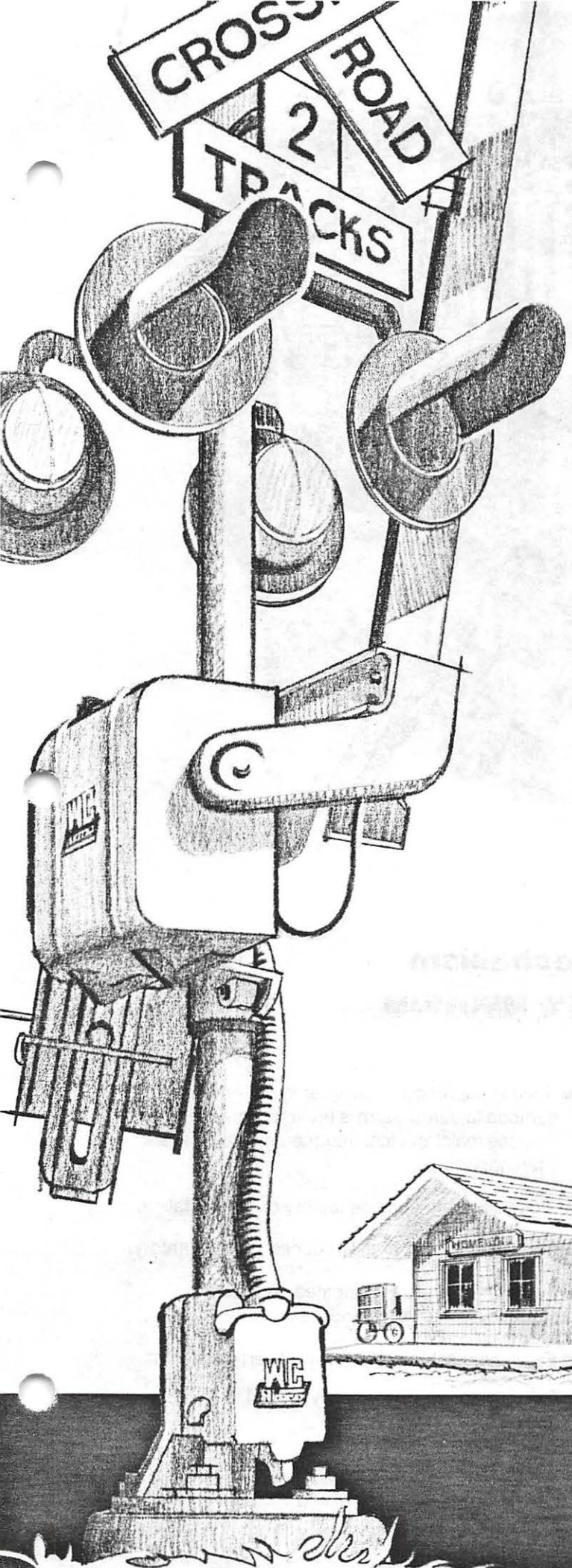

WESTERN · CULLEN · HAYES

model 10 signal featuring the 3590 series gate mechanism

a quality, long life mechanism
you can depend on for maximum
reliability & minimum maintenance

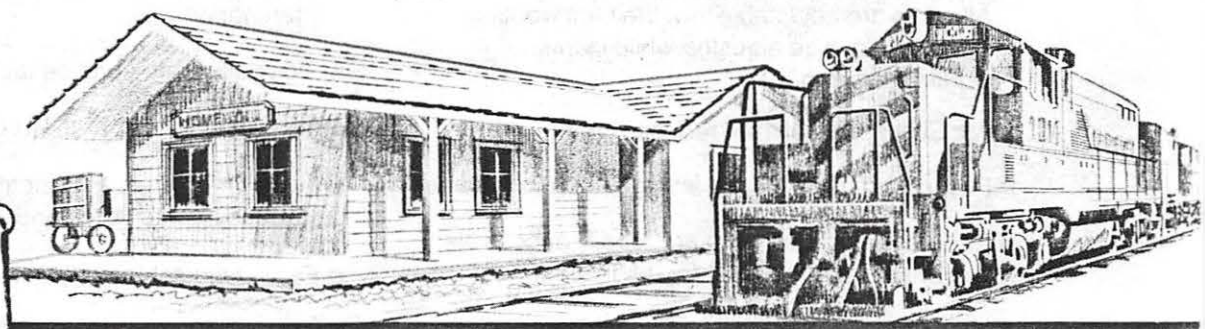

WC Hayes
WESTERN-CULLEN-HAYES, Inc.
2700 West 36th Place • Chicago, Illinois 60632
Telephone: 312/254-9600 • Telex 25-3206

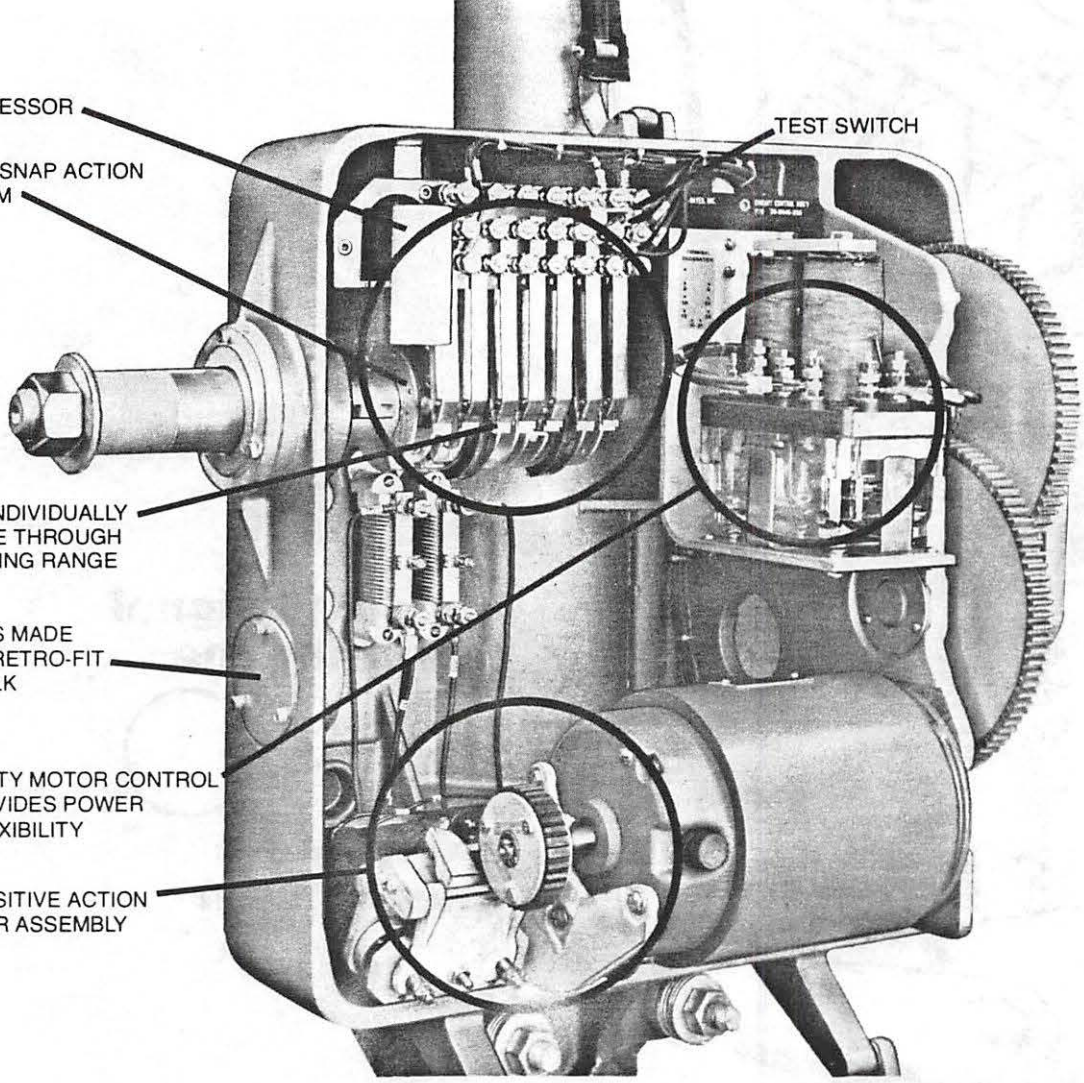

WESTERN·CULLEN·HAYES

3590 series gate mechanism

COMBINES MAXIMUM RELIABILITY, MINIMUM MAINTENANCE AND LONG LIFE

- Space for seven heavy duty contacts and cams. Motor control cam has exclusive sliding action—minimizes gate arm pumping and contact burning. All cams are adjustable thru their full working range and can be adjusted while in their working position.
- Arc Suppressor further reduces contact burn.
- Fast clear time—means less gate arm breakage.
- Easy to service, all parts are readily accessible. Cover swings out of way for inspection.
- High quality Motor Control Relay provides power wiring flexibility. This feature permits replacing other type mechanisms with a 3590 mechanism when the wiring is already in place.
- "Flame Hardened" steel gear teeth—minimizes damage to gears if arm is broken; increases life, reduces maintenance. Intermediate gears are interchangeable.
- Sidewalk shaft—can be factory or field installed.
- Interchangeable parts—reduces parts inventory.
- All bearings are pre-lubricated and sealed—reduces maintenance and wear.
- Easily adjustable horizontal and vertical stops.
- Circuit diagram permanently affixed to inside cover.

EXCLUSIVE MOTOR CONTROL SNAP ACTION SLIDING CAM U.S. Patent No. 4057208

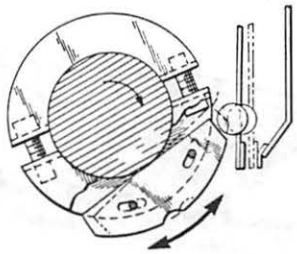

Reduces the possibility of gate arm pumping—minimizes contact burning. All other cams are interchangeable. Cam slides forward to allow arm to raise to proper position, then snaps backward allowing fast contact opening. This helps eliminate arcing and pumping.

ARC SUPPRESSOR

Further reduces burn on motor-up contact.

INDIVIDUALLY ADJUSTABLE CAMS

Allows greater flexibility to adjust arm travel and positioning. Spare cams and contacts allow variety of field wiring options to meet individual requirements.

MOTOR CONTROL RELAY

3590 and 3593 versions are determined by this relay and minor wiring changes. 3590 accommodates three power wires. 3593 allows use of two power wires—power down control is switched through this safety grade relay. The relay is energized with gate in the up position.

HOLD CLEAR ASSEMBLY

The single most important sub-assembly—ensures reliability.

Non-dragging Pawl and Ratchet Wheel reduces wear. The One Way Ramp and Roller Mechanical Clutch ensure positive stop. Reversible Pawl reduces maintenance costs. Non-locking angles between Pawl and Ratchet Wheel provide increased safety.

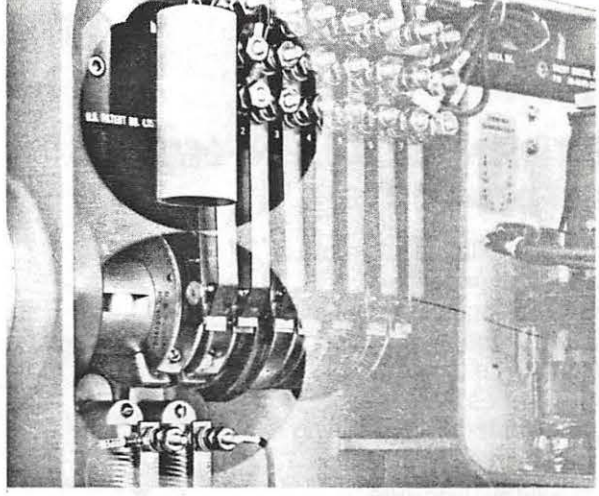

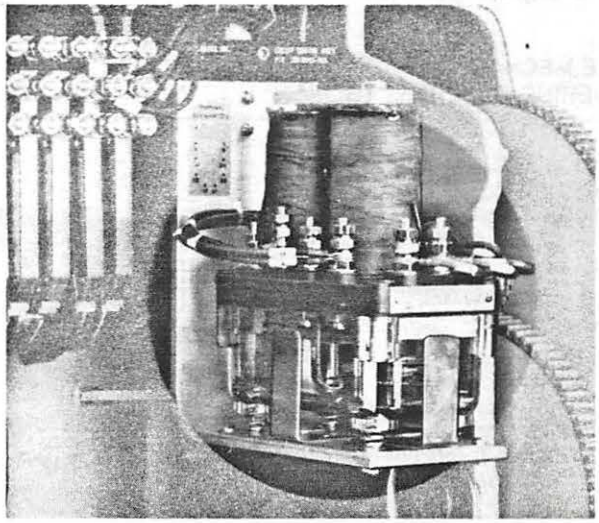

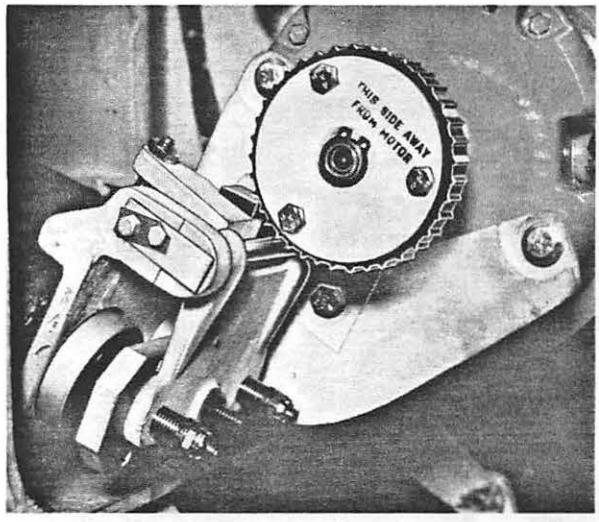

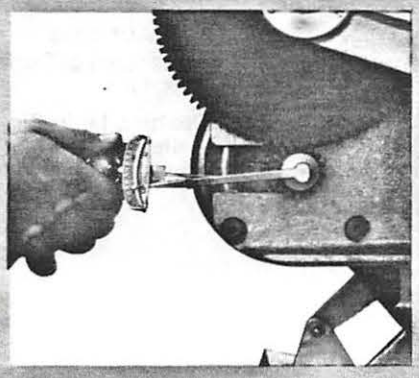

OPTIONAL PRODUCTS

- W-C-H Torque Wrench permits making quick and easy torque measurements. The Wrench is calibrated directly in foot-pounds (referenced to the main shaft), eliminating the need for coversion charts. Measuring can be accomplished from the ground by one man.
- Tool Kits—Maintainers and Installer/Supervisor.
- Sidewalk shaft—installed at factory or provision to install in field.
- Variety of Gate Arms.
- Heater.
- Spring Scale—for torque measurements.
- All Temperature Gear Grease.

WESTERN·CULLEN·HAYES
signal products

Western-Cullen-Hayes has more than 80 years of experience in Highway-Crossing equipment, plus a reputation for the most dependable products in the field. In addition to our 3590 Series Gate mechanisms and our Model 10 Crossing Signal, we can meet your needs with other Signaling products.

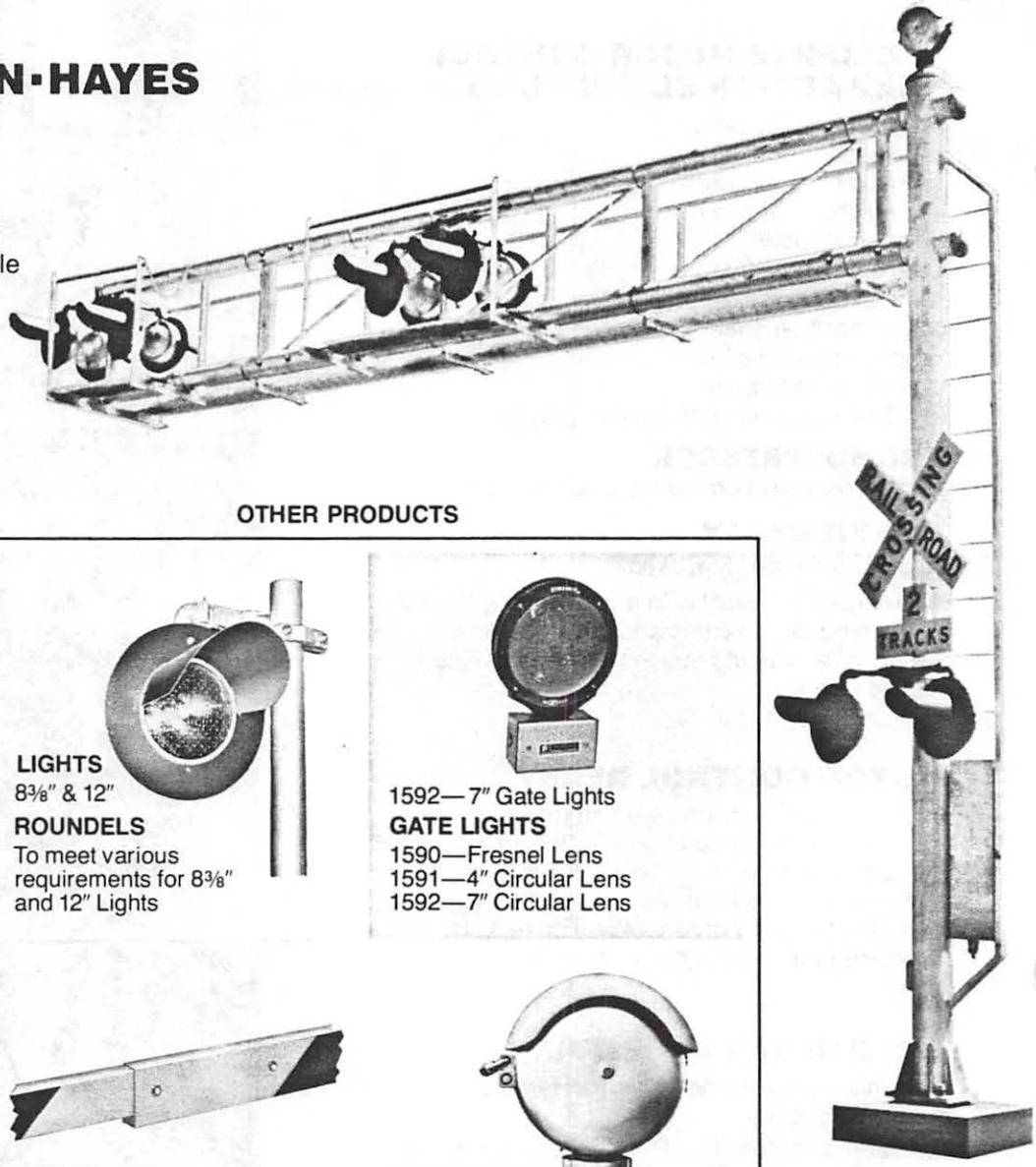

GATE MECHANISM ORDERING REFERENCES

3590-131 3 Power Wire Control
3593-131 2 Power Wire Control
3590-132 3 Power Wire Control with sidewalk shaft
3593-132 2 Power Wire Control with sidewalk shaft

ACCESSORIES
3590-K9 Vertical Torque Wrench Kit
3562-210 Torque Adjusting Scale
38-0045-287 Heater
3590-1650 All Temp. Lubricating Grease for Gears

OTHER PRODUCTS

LIGHTS
8⅜" & 12"

ROUNDELS
To meet various requirements for 8⅜" and 12" Lights

1592—7" Gate Lights

GATE LIGHTS
1590—Fresnel Lens
1591—4" Circular Lens
1592—7" Circular Lens

SIGNS
Cross Buck
No. of Track
Advance Warning Sign

GATE ARMS
Wooden
Fiberglass
Aluminum/Fiberglass Combination
Breakaway Adapters

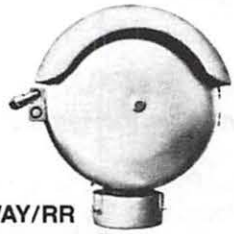

HIGHWAY/RR
0333—Crossing Bell

CROSSING WARNING SYSTEMS
Material, Engineering, or Completely Wired Cases

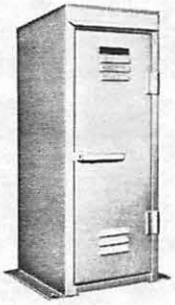

OTHER PRODUCTS
Lighting Transformers
Rectifiers
Terminal Strips
Lightning Arresters
Test Instruments
Rail Bonding Drills and Bits
Track Drills and Bits

TERMINAL BOXES
Fiberglass Battery Boxes
Pole Mount Instrument Cases
Pole Mount Terminal and Arrester Boxes

OTHER W-C-H SIGNAL SUPPORT STRUCTURES

Walkout Cantilever pictured above meets applicable AAR & AASTHO Specifications.

Rotatable Cantilever meets AAR Recommendations.

Signal Bridges —Standard or Custom designs.

Flashing Light Signals —Standard of the industry for many years.

For further information write or call 312/254-9600 or your W-C-H Representative.

WESTERN-CULLEN-HAYES, Inc.
2700 West 36th Place • Chicago, Illinois 60632
Telephone: 312/254-9600 • Telex 25-3206

Printed in U.S.A.
M M882

3590 SERIES
CROSSING GATE MECHANISM
and Replacement Parts

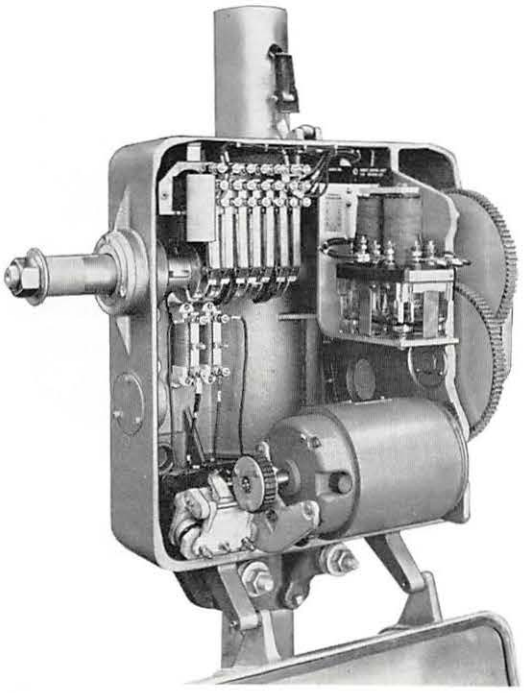

Contents

Gate Mechanism Complete	3-212 to 3-213
Gate Mechanism Detail Parts	3-212 to 3-215
Motor and Ratchet Wheel	3-216
Hold-Clear Assembly Replacement Parts	3-217 to 3-218
Circuit Controller Assembly	3-219
Sidewalk Kit	3-220
Heater Assembly	3-221
Counter Kit	3-222

WESTERN-CULLEN-HAYES, Inc.
2700 West 36th Place • Chicago, Illinois 60632

3590 SERIES CROSSING GATE MECHANISMS

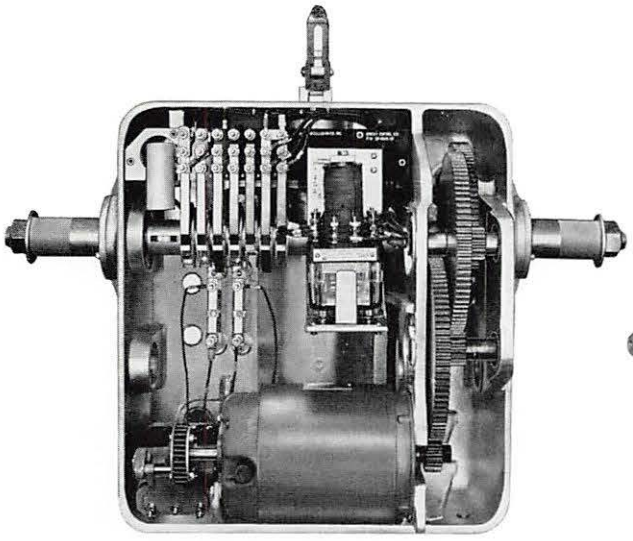

Ref M

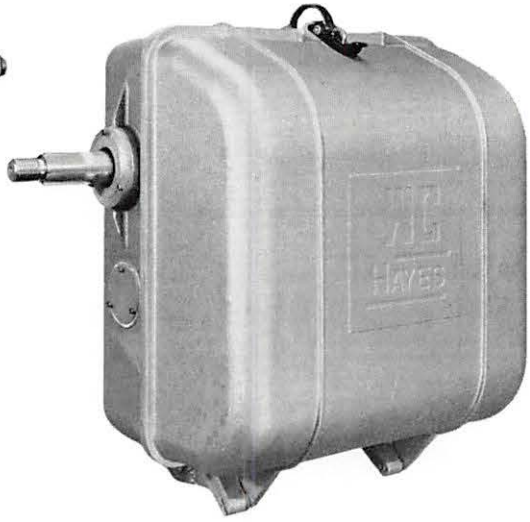

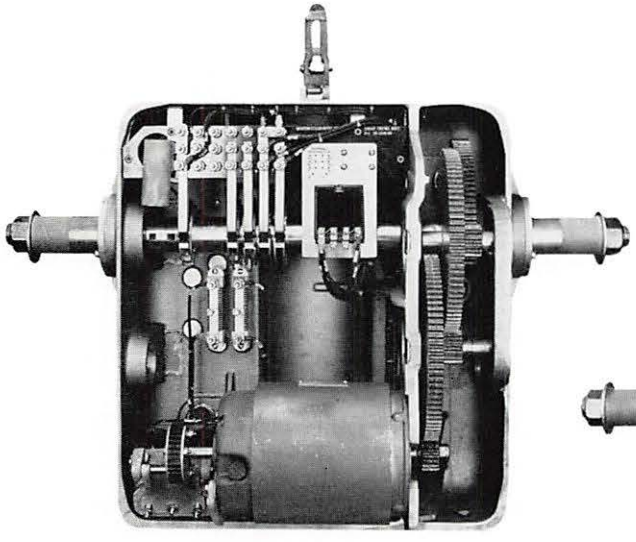

Ref M2

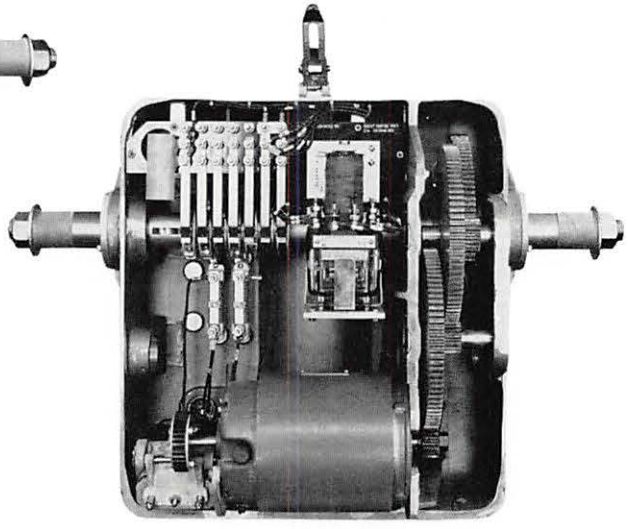

Ref M4

WESTERN-CULLEN-HAYES, Inc.
2700 West 36th Place • Chicago, Illinois 60632

3590 SERIES
CROSSING GATE MECHANISMS

Ref. No.	Description	Piece No.
	For the following items refer to Page 3-212	
M	Type 3590 Crossing Gate Mechanism, for roadway arm only with 12-20 VDC motor and hardware kit for mounting on 5″ I.D. pipe post	**3590-131**
M1	As above, but including sidewalk arm shaft.	**3590-132**
M2	Type 3590B Crossing Gate Mechanism, for roadway arm only with 12-20 VDC motor and hardware kit for mounting on 5″ I.D. pipe post.	**3590B-131**
M3	As above, but including sidewalk arm shaft.	**3590B-132**
M4	Type 3593 Crossing Gate Mechanism, for roadway arm only with 12-20 VDC motor and hardware kit for mounting on 5″ I.D. pipe post	**3593-131**
M5	As above, but including sidewalk arm shaft.	**3593-132**
	For the following items, refer to Page 3-214	
A	Motor Assembly, Complete. For details see page 3-217	**38-0045-82X**
B	Hold-Clear Assembly, Complete. For details see page 3-218	**38-0045-254**
C	Circuit Controller, Complete, for Type 3590 Crossing Gate Mechanism. For details see page 3-220	**38-0045-20**
C1	Circuit Controller, Complete, for Type 3590B Crossing Gate Mechanism. For details see page 3-220	**38-0045-20-1**
C2	Circuit Controller, Complete, for Type 3593 Crossing Gate Mechanism. For details see page 3-220	**38-0045-235**
D	Motor Control Relay for Types 3590 and 3593 Crossing Gate Mechanism, 2FB, 1000 ohms. For details consult factory.	**38-0050-200**
D1	Motor Control Relay for Type 3590B Crossing Gate Mechanism, 2FB, 32.3 ohms	**38-0045-188-1**
D2	Alternative Motor Control Relay for Types 3590 and 3593 Mechanism, 2FB, 280 ohms. For details consult factory.	**38-0050-400**
D3	Same as D2, but 160 ohms.	**38-0050-300**
E	Sidewalk Arm Shaft Kit. Permits addition of sidewalk arm to roadway mechanism listed above. For details, see Page 3-221.	**3590-295**
F	Heater, Complete. 115VAC-25W. For details see page 3-222	**38-0045-287**
F1	Heater, Complete. 24 VDC-25W. For details see page 3-222	**38-0045-318**
G	Hardware Kit—Includes mounting clamps & bolts and other miscellaneous accessory equipment (not shown)	**3590-294**
H	4″ Mast Adapters—Bolt Sleeve; 6 are required to adapt the mechanism mounting hardware (not shown)	**3580-300**
J	Counter Complete, unit automatically counts mechanism operation cycles. For details see page 3-223	**38-0045-192**

WESTERN-CULLEN-HAYES, Inc.
2700 West 36th Place • Chicago, Illinois 60632

CROSSING GATE MECHANISM

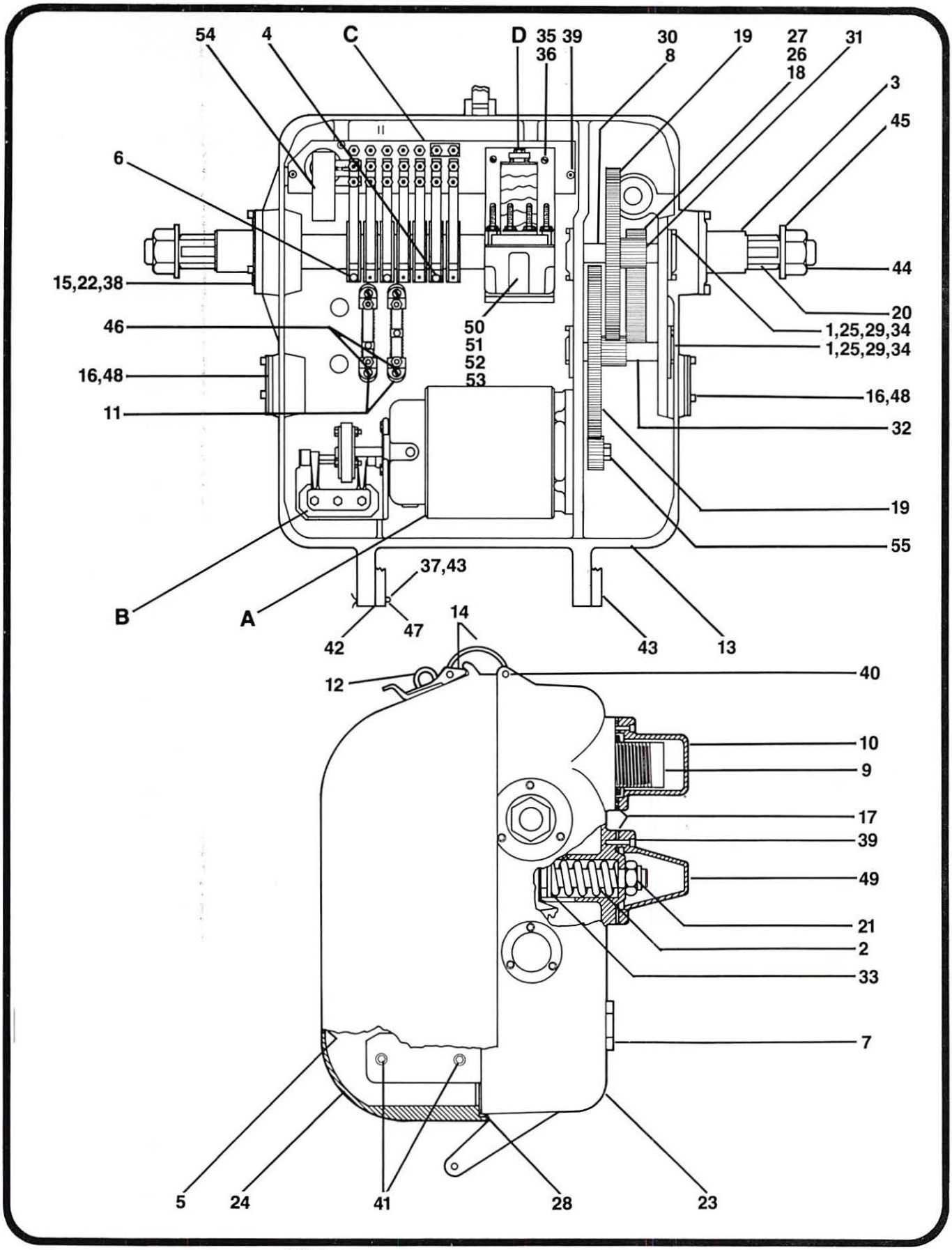

WESTERN-CULLEN-HAYES, Inc.
2700 West 36th Place • Chicago, Illinois 60632

3590 SERIES
CROSSING GATE ASSEMBLY

REPLACEMENT PARTS

Ref. No.	Description	Piece No.
1	Bearing Cover	38-0045-30
2	Spring, Vertical Stop	38-0045-38
3	Space Tube	38-0045-42
4	Cam Assembly (for Contacts No. 2 thru No. 7)	38-0045-55
5	Wiring Diagram, for Type 3590 Mech (Not Shown)	38-0045-321
5a	Wiring Diagram, for Type 3590B Mech (Not Shown)	38-0045-320
5b	Wiring Diagram, for Type 3593 Mech (Not Shown)	38-0045-330
6	Slide Cam Assembly (for No. 1 Contact)	38-0045-92
7	Hex Bushing	38-0045-138
8	Gear Shaft for Intermediate Gears (Not Shown)	38-0045-267
9	Spring Assembly, Horizontal Stop	38-0045-305
10	Horizontal Stop Spring Cover	38-0045-312
11	Adjustable Resistance Unit	1110-1
12	Staple	1265-4
13	Ventilator Screen (Not Shown)	1265-6-A
14	Hasp Assembly	1265-40
15	Bearing (Not Shown)	3580-166
16	End Cap	3580-291
17	Neoprene Gasket	3580-281
18	Gear Segment	3590-219-F
19	Gear Cluster	3590-220-F
20	Main Shaft	3590-222
21	Nut, Nylon Insert, for Vertical Stop Assy.	3590-231
22	Cap, Main Shaft	3590-232
23	Case	3590-234-M
24	Cover	3590-240-M
25	Bearing (Not Shown)	3590-249

WESTERN-CULLEN-HAYES, Inc.
2700 West 36th Place • Chicago, Illinois 60632

REPLACEMENT PARTS

Ref. No.	Description	Piece No.
26	Set Screw	3590-251
27	Woodruff Key	3590-254
28	Gasket	3590-258
29	Bearing Cap Spacer	3590-276
30	Spacer	3590-277
31	Spacer	3590-278
32	Spacer	3590-279
33	Bumper Pin Assembly, Vertical Stop	3590-293
34	BTN. HD. SOC. Cap. Sc. STL., ZP.	#8-32 x 3/8 Lg
35	RD. HD. Mach. Sc., STL., ZP.	#10-24 x 1¼
36	Lock Washer	#10
37	Cotter Pin, STL., ZP.	3/16 x 2½ Lg
38	HH. Soc. Cap Scr., ZP.	¼-20 x ¾ Lg
39	HH. Soc. Cap Scr., STL., ZP.	¼-20 x 1¼
40	Roll Pin STL., ZP.	5/16 x 1⅝ Lg
41	Flat HH. Soc. Cap. Sc., STL., ZP., for Motor	⅜-16 x 1 Lg
42	Flat Washer, STL., ZP.	⅜
43	Roll Pin, STL., ZP.	⅜ x 2" Lg
44	Hex Nut, STL., ZP.	1¼-7
45	Flat Washer, STL., ZP.	1¼ ID
46	RD. HD. BR. Mach. Scr.	10-24 x 1¾
47	PLN. STL. Washer ZP.	¼"
48	HH. Soc. Cap Screw ZP.	¼-20 x ⅜
49	Vertical Stop Spring Cover	3580-247
50	MTG. BRKT. & Spring Base Assembly	38-0045-225
51	Spring Lockwasher STLQ (.Not Shown)	#10
52	Hex Nut, Brass (Not Shown)	#10-32
53	RD. HD. Mach. Screw, Brass (Not Shown)	#10-32 x ½"
54	Arc Suppressor	38-0045-293
55	Pinion Gear	3590-218

WESTERN-CULLEN-HAYES, Inc.
2700 West 36th Place • Chicago, Illinois 60632

MOTOR AND RATCHET WHEEL

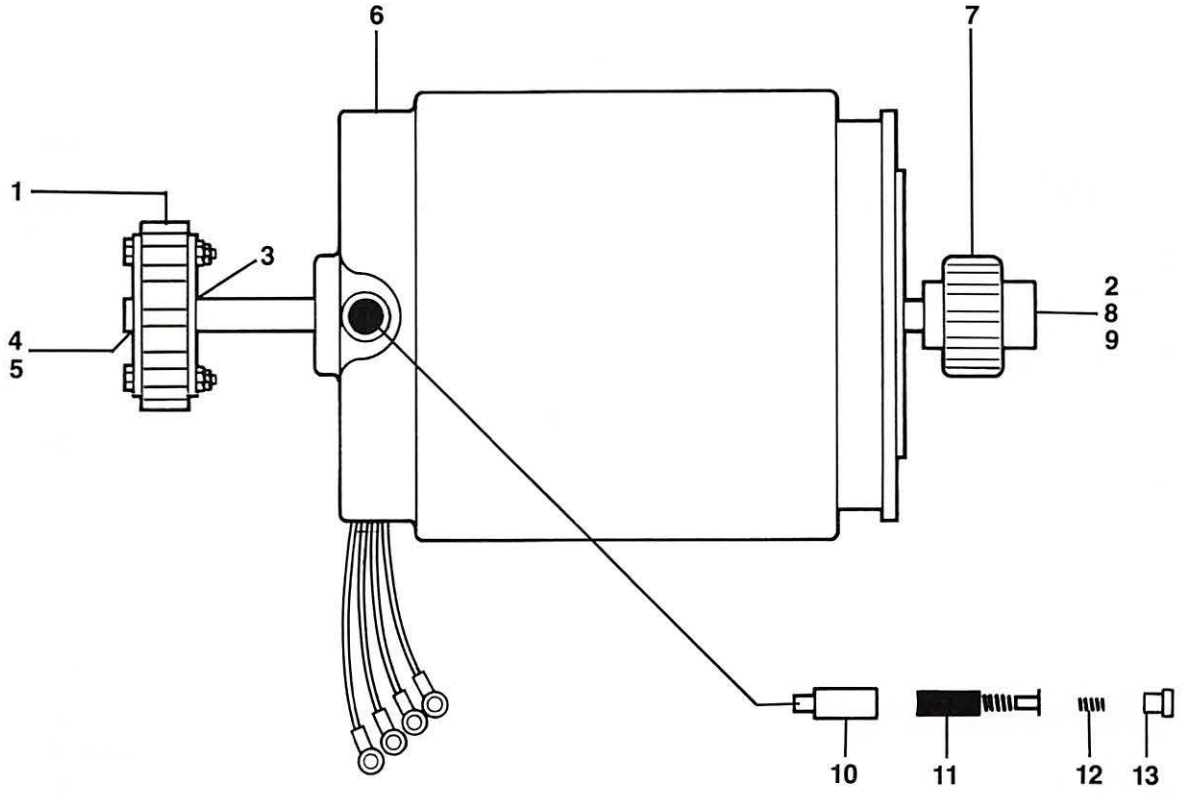

Ref. No.	Description	Piece No.
A	Motor Assembly Complete 3590/93	38-0045-82X
	REPLACEMENT PARTS	
1	Ratchet Wheel Assembly	38-0045-262
2	Woodruff Key, Motor Pinion	38-0045-86
3	Washer (1 pc)	38-0045-182
4	Key, Ratchet Wheel	3580-270
5	Retaining Ring	3580-271
6	Motor	3590-217X
7	Pinion, Motor	3590-218
8	RD HD Mach Screw Nylok	#8-32-½ LG
9	Washer	38-0045-241
10	Brush Holder	38-0045-117
11	Motor Brush	38-0045-118
12	Cap Spring	38-0045-137
13	Brush Cap	38-0045-268

WESTERN-CULLEN-HAYES, Inc.
2700 West 36th Place • Chicago, Illinois 60632

CROSSING GATE MECHANISM

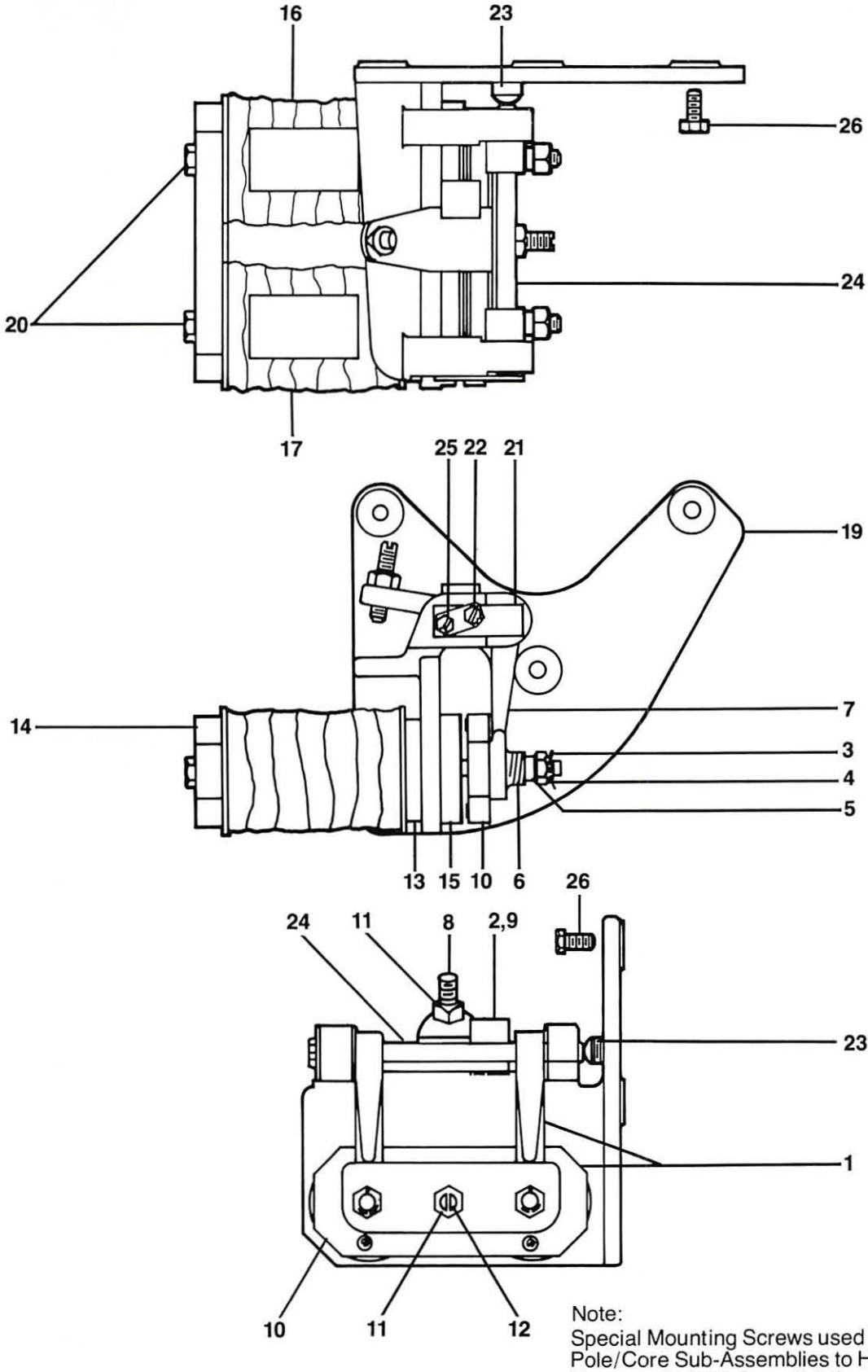

Note:
Special Mounting Screws used to hold Pole/Core Sub-Assemblies to Hold-Clear Base are Ref. 18, Page 3-219.

WESTERN-CULLEN-HAYES, Inc.
2700 West 36th Place • Chicago, Illinois 60632

HOLD CLEAR ASSEMBLY

Ref. No.	Description	Piece No.
B	Hold-Clear Assembly, Complete	38-0045-254
	REPLACEMENT PARTS	
1	Armature and Support Bracket Assembly, consists of References 2, 3, 4, 5, 6, 7, 8, 9, 10, 11, 12	38-0045-159
2	Pawl	38-0045-7
3	Cotter Pin	38-0045-139
4	Castle Nut	38-0045-140
5	Cup Washer	38-0045-220
6	Compression Spring	38-0045-223
7	Armature Support Bracket	38-0045-246
8	Set Screw	38-0045-256
9	Pawl Mounting Screw (Not Shown)	38-0045-261
10	Armature Sub-Assembly	38-0045-265
11	Hex Jam Nut, Brass Nickle Pl., ¼-20	
12	Set Screw	38-0045-266
13	Coil Spacer	38-0045-147
14	Magnet Yoke	38-0045-148
15	Magnet Pole and Core Sub-Assembly	38-0045-151
16	Hold Coil, 340 Ohms	38 0045-158
17	Pick Coil, 32 Ohms	38-0045-162
18	Mounting Screw, Pole/Core Sub Assy to Hold-Clear Base (Not Shown)	38-0045-260
19	Hold-Clear Base	38-0045-248
20	Mounting Screw, Magnet Yoke to Pole/Core Sub-Assy	38-0045-264
21	Hinge Pin Stop	38-0045-152
22	Bolt/Screw Keeper	38-0045-153
23	Set Screw, Nickel Plated Brass	38-0045-157
24	Hinge Pin	38-0045-160
25	Hex Bolt, Nickel Plated Brass	38-0045-279
26	Hex Head Cap Screw, Grade 8	38-0045-282

WESTERN-CULLEN-HAYES, Inc.
2700 West 36th Place • Chicago, Illinois 60632

CIRCUIT CONTROLLER ASSEMBLY

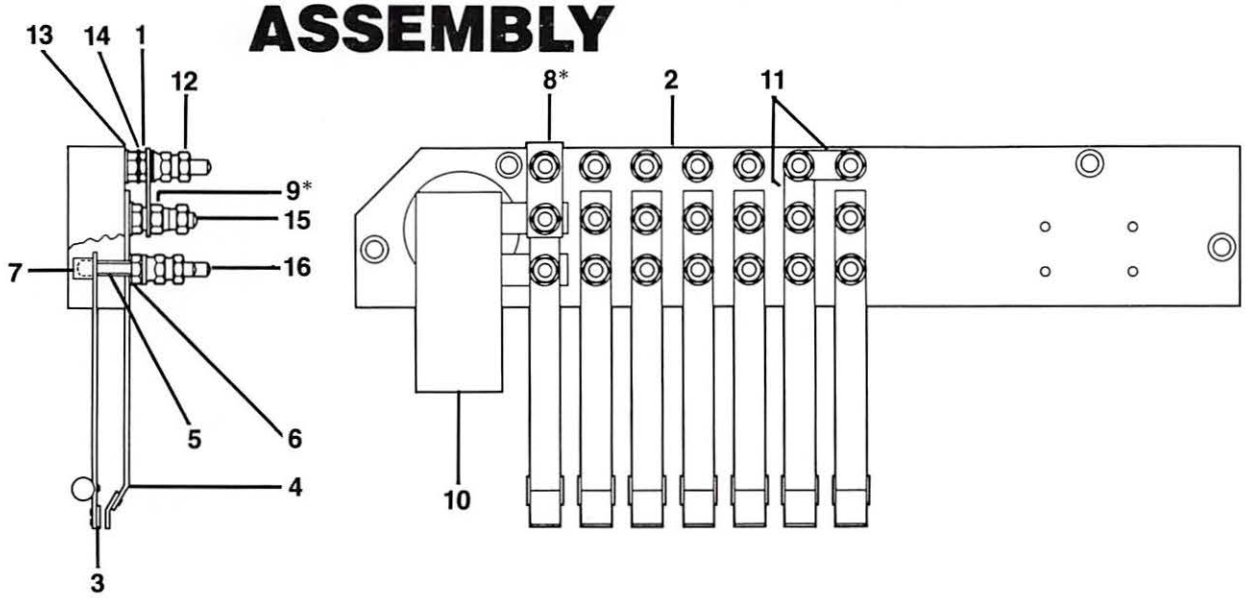

Ref. No.	Description	Piece No.
C	Circuit Control Assembly Complete 3590	38-0045-20
C1	As above, but for type 3590-B mech	38-0045-20-1
C2	As above, but for type 3593 mech	38-0045-235

REPLACEMENT PARTS

1	Hex Nut	0012-5
2	Terminal Board	38-0045-21-A
3	Contact Spring Assy, Back	38-0045-27
4	Contact Spring Assy, Front	38-0045-28
5	Insulator Sleeve	38-0045-29-A
6	Insulator Washer	38-0045-29-B
7	Binding Post Seat	38-0045-77
8*	Test Terminal	38-0045-89
9*	Gold Test Nut	38-0045-290
10	Arc Suppressor	38-0045-293
11	Connector	1705-4
12	Binding Nut	10706
13	Clamp Nut	10707
14	Washer	10708
15	Binding Post 1⅞ LG	10709-2
16	Binding Post 2¼ LG	10709-3

*Test Terminal and Gold Test Nut located as shown on Types 3590 and 3590B Mechanism; located on Terminals 6A, 7A on Type 3593 Mechanism

WESTERN-CULLEN-HAYES, Inc.
2700 West 36th Place • Chicago, Illinois 60632

SIDEWALK KIT

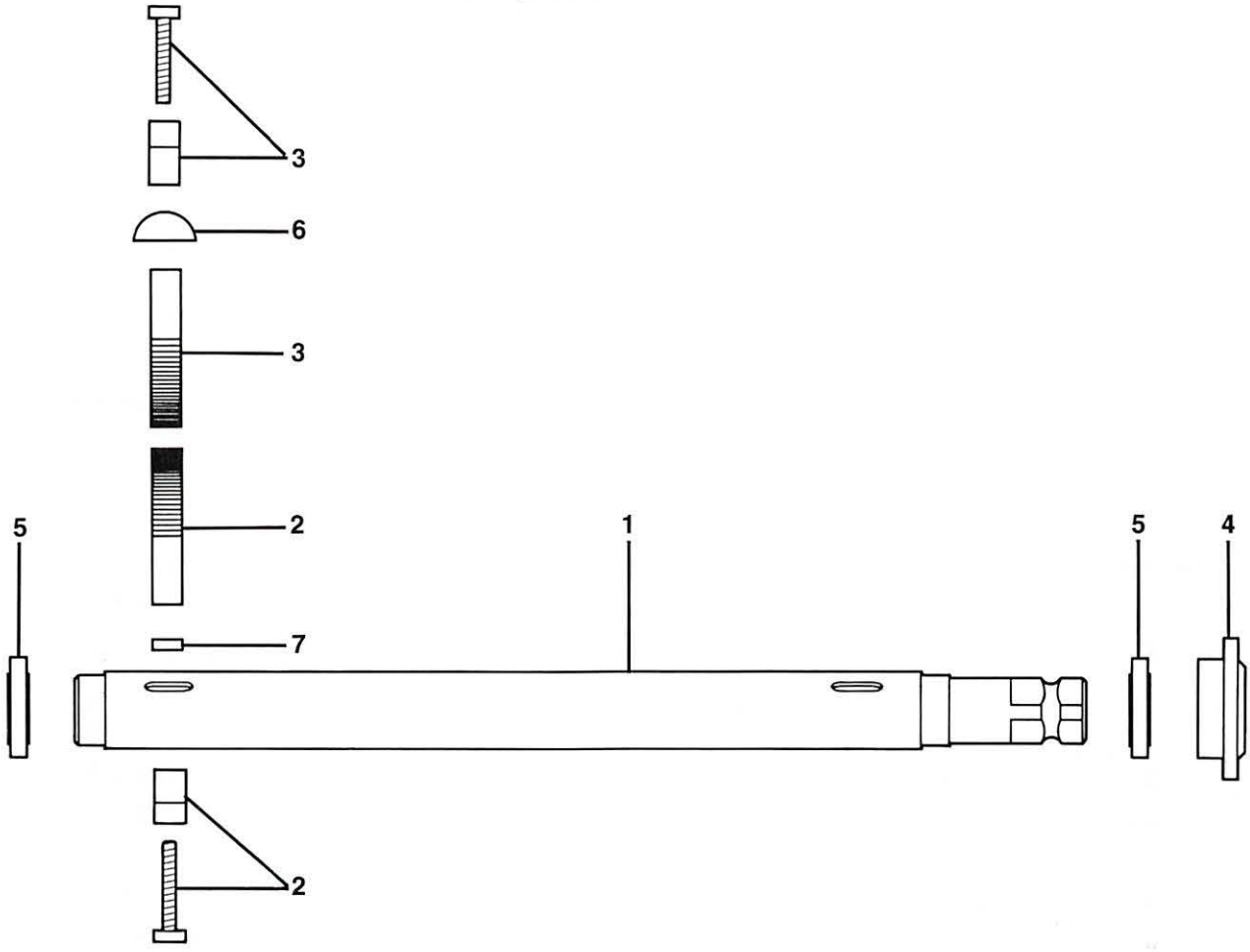

Ref. No.	Description	Piece No.
E	Sidewalk Arm Shaft Kit (for RH or LH use)	3590-295

REPLACEMENT PARTS

1	Sidewalk Arm Shaft	3590-223
2	Gear Segment w/clamp and Assy. Bolts, for Sidewalk Shaft	3590-224
3	Gear Segment w/Clamp and Assy. Bolts, for Main Shaft	3590-225
4	Collar	3590-227
5	Bearing	3590-248
6	Woodruff Key, for Main Shaft	3590-254
7	Key, for Sidewalk Shaft	3590-255

WESTERN-CULLEN-HAYES, Inc.
2700 West 36th Place • Chicago, Illinois 60632

CONTACT HEATER ASSEMBLY

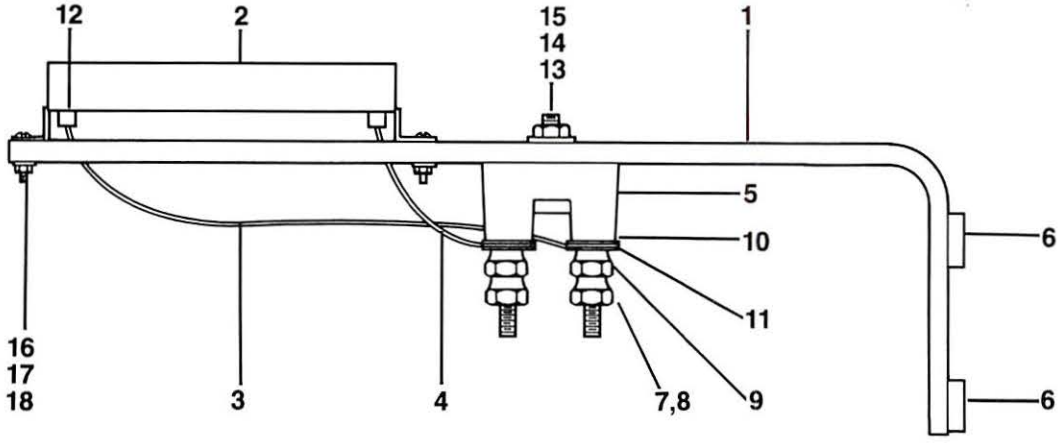

Ref. No.	Description	Piece No.
F	Contact Heater Assembly Complete, 115VAC, 25 Watt	38-0045-287
F1	Contact Heater Assembly Complete, 24 VDC, 25 Watt	38-0045-318
	REPLACEMENT PARTS	
1	Mounting Bracket	38-0045-288
2	Resistance Heater, 115 VAC	38-0045-286
2a	Resistance Heater, 24 VDC	38-0045-317
3	14 Ga. Wire, 8½" lg.	39-0102-2-T
4	14 Ga. Wire, 4" lg.	39-0102-2-S
5	Terminal Assy.	2506-1-1
6	Spacer	5907-184
7	Insulating Cap Black (Not Shown–on 115 VAC Heater only)	R-2000-1
8	Insulating Sleeve (Not Shown–on 115 VAC Heater only)	R-2000-2-A
9	Binding Nut	10706
10	Washer	10708
11	Wire Terminal	31906
12	Shrink Tube	¼ ID x ¾
13	Fillister HD. Scr.	¼-20 x 1
14	Hex Nut	¼-20
15	Lockwasher	¼-20
16	Rd. Hd. Mach. Scr.	6-32 x ½
17	Split Lockwasher	6-32
18	Hex Nut	6-32

WESTERN-CULLEN-HAYES, Inc.
2700 West 36th Place • Chicago, Illinois 60632

COUNTER KIT

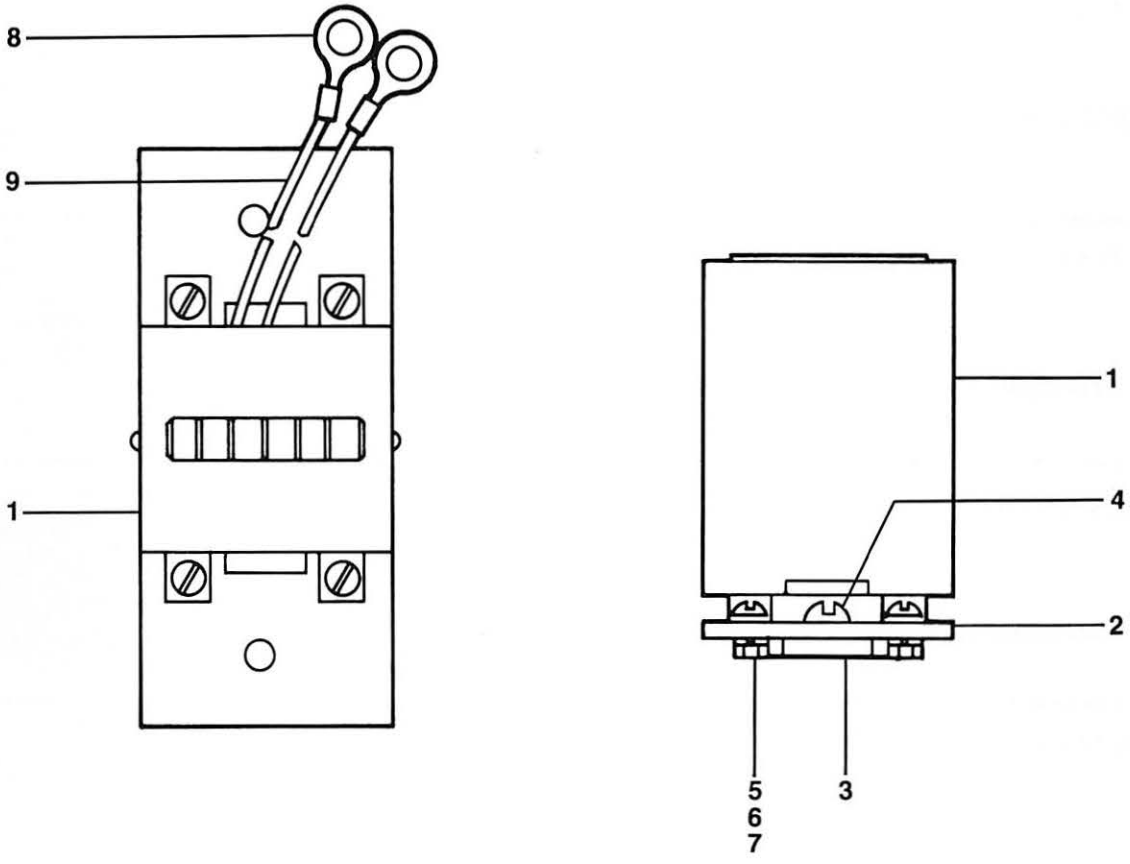

Ref. No.	Description	Piece No.
J	Counter Kit	38-0045-192

REPLACEMENT PARTS

1	Counter	38-0045-193
2	Mounting Plate	38-0045-194
3	Spacer	5907-184
4	RD HD Mach. Sc. Cad. PLT. Brass	#10-24 x ½ Lg.
5	RD HD Mach. Sc. Cad. PLT. Brass	#6-32 x ⅜ Lg
6	Internal Tooth Lockwasher (Not Shown)	#6
7	Hex Nut Cad. PLT Brass	#6
8	Terminal	31906
9	Wire Assembly	39-0106-23

WESTERN-CULLEN-HAYES, Inc.
2700 West 36th Place • Chicago, Illinois 60632

MAINTENANCE AIDS

TORQUE ADJUSTING SCALE

Appropriate spring scales complete with chain and hook, for measuring torque, are available.

PN: 3562-210

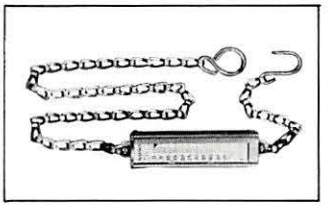

TORQUE WRENCH KIT

Vertical Torque measurements can be obtained by utilizing hex stub furnished as integral part of Motor Pinion (Order Kit No. 3590-K8 if motor pinion does not have hex stub).

PN: 3590-K9

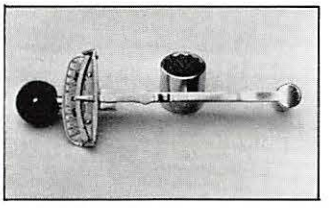

TOOL KIT

Specialized tools required to perform normal field maintenance on 3590 Series Gate Mechanisms, including four "T" handled Allen wrenches, one combination wrench, one terminal wrench and carrying case.

PN: 3590-K11

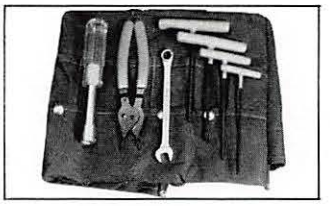

CONTACT TENSION TESTING SCALE

This Tension Testing Scale meets the requirement for determining contact pressure. It can be used to measure tension by pushing the movable contact away from the fixed contact or by pulling it away. Full scale two pounds by ¼ ounces.

PN: 3565-211

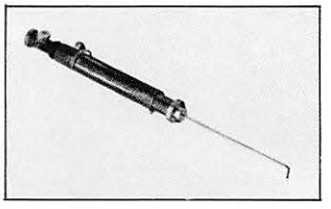

CONTACT ADJUSTING TOOL KIT

After measuring contact pressure, it may be necessary to make adjustments. These special tools should be used. Kit consists of 3 adjustment tools and convenient carrying pouch.

PN: ES-6104-6

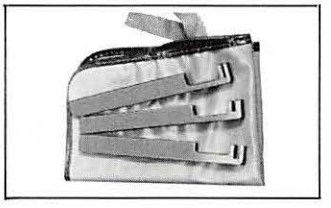

GEAR GREASE

This Gear Grease is recommended for use with crossing gate mechanisms. Its unique characteristics include:

1. Ability to remain viscous in cold temperatures.
2. Reduced tendency to splatter.
3. Does not emit fumes that attack motor brushes, causing them to crumble, as do some types of greases.

PN: 3590-1650

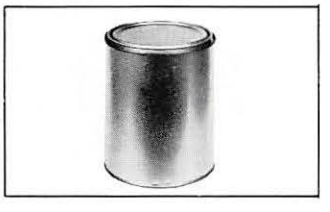

PRINTED IN USA 83F5M

WESTERN-CULLEN-HAYES, Inc.
2700 West 36th Place • Chicago, Illinois 60632

FIBERGLASS GATE ARMS AND MAINTENANCE PARTS

GENERAL INFORMATION

The Western-Cullen-Hayes Fiberglass Gate Arm is field proven. Signalmen appreciate the benefits gained as a result of its many unique features.

Easy To Handle—

Lightweight . . . . . 13'-19' Arm is 23.50 pounds.
. . . . . 20'-26' Arm is 32.75 pounds.
Longest Section . . . . . only 9'6".

Strong, Safe—

Designed to withstand 90 mph velocity wind load. Excellent dielectric strength—200 volts per Mil.

Stair-Stepped, Trombone Design—

Less wind resistance, fewer blowdowns. Less sag due to weight. Only two arms are necessary to cover a range from 13'-26'.

Independent Bolts at Joints—

Thread into nuts imbedded in the fiberglass. Pull adjoining walls together instead of collapsing them. Strengthen union between sections, reducing droop.

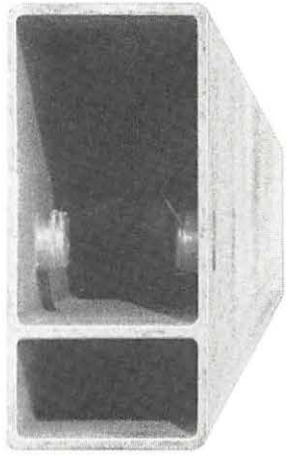

Internal Web—

Strengthens arm. Provides cable raceway, if desired.

Adaptable—

Inside dimensions at the end of the Butt Section (4¾" x 1¾") are common to other makes of Fiberglass arms. Three types of gate lights to choose from. Direct-connection and pull apart cables available. Many different break-away adapters accommodate all types of gate mechanisms and other-make break-away devices. Modified design available for use as sidewalk arm.

Following catalog pages detail various arm assemblies and maintenance parts. Consult Section 3-400 for Adapters and Section 3-500 for Gate Light details.

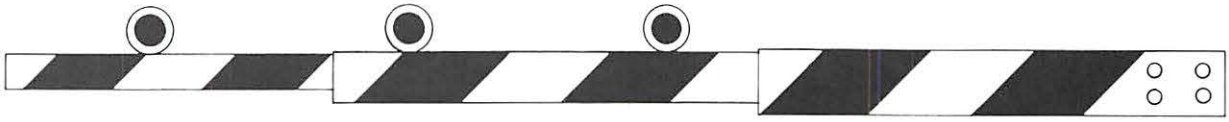

ORDERING REFERENCES—WITH LIGHTS AND WIRING

Furnished complete with 3 gate lights, wiring, cable clips, and all necessary mounting hardware. Arms with standard wiring harnesses and those with female, pull-apart connectors are listed. Female connector matches male plug furnished with certain W-C-H adapters.

Type of Red and White Reflex-Reflective Cover	With Connector	Arm Length	WITH TYPE GATE LIGHT		
			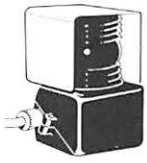 Type 1590	Type 1591	Type 1592
Engineering Grade	No	13'-19'	38-0026-54	38-0026-80	38-0026-84
	No	20'-26'	38-0026-56	38-0026-81	38-0026-85
Hi-Intensity Grade	No	13'-19'	38-0026-135	38-0026-137	38-0026-114
	No	20'-26'	38-0026-136	38-0026-138	38-0026-115
Engineering Grade	Yes	13'-19'	38-0026-150	38-0026-151	38-0026-152
	Yes	20'-26'	38-0026-156	38-0026-157	38-0026-158
Hi-Intensity Grade	Yes	13'-19'	38-0026-153	38-0026-154	38-0026-155
	Yes	20'-26'	38-0026-159	38-0026-160	38-0026-161

ORDERING REFERENCES—ARMS ONLY

Type of Red and White Reflex-Reflective Cover	Arm Length	Piece No.
Engineering Grade	13'-19'	38-0026-47
	20'-26'	38-0026-57
Hi-Intensity Grade	13'-19'	38-0026-112
	20'-26'	38-0026-113

These arms are furnished with assembly hardware.

Sidewalk arms are listed elsewhere in this section.

ORDERING REFERENCES

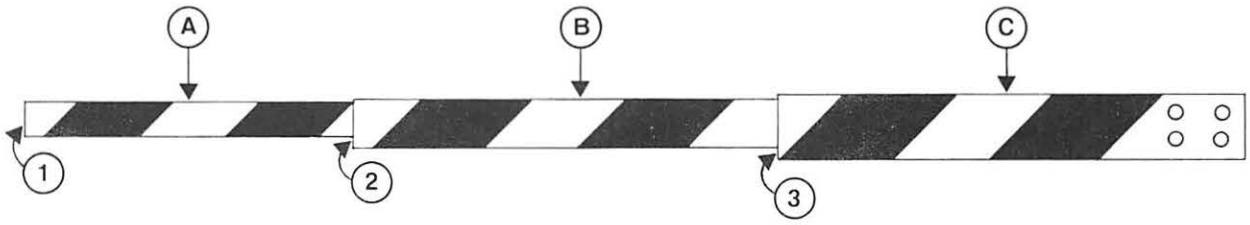

ARM SECTIONS

Type of Red and White Reflex-Reflective Cover	Arm Length	Reference A Tip Section	Reference B Mid Section	Reference C Butt Section
Engineering Grade	13'-19'	38-0026-50	38-0026-49	38-0026-48
	20'-26'	38-0026-60	38-0026-59	38-0026-58
Hi-Intensity Grade	13'-19'	38-0026-108	38-0026-107	38-0026-106
	20'-26'	38-0026-111	38-0026-110	38-0026-109

END PLUGS

Reference 1 Tip End Plug	Reference 2 Mid End Plug	Reference 3 Butt End Plug
38-0026-53	38-0026-52	38-0026-51

Same for any length arm.

WIRING KITS

Type Kit	Arm Length 13'-19'	Arm Length 20'-26'
W/O Female Plug Connector	38-0011-46	38-0011-47
With Female Plug Connector	38-0026-162	38-0026-163
Butt End of Cable W/Female Plug Only	38-0026-120B	38-0026-120A

Kits furnished complete with mounting hardware.

HARDWARE

Purpose	Bolt	Washer	Nut
Holding Arm Sections Together	Hex Head, 5/16"-18 x 3/4"	5/16"	N/A
Holding Arm To Adapter	Hex Head, 3/8"-16 x 2 1/2"	3/8"	3/8"-16

All hardware zinc plated, di-chromate dipped.

NOTE: Consult Catalog Section 3-400 for information on Breakaway Adapters, Section 3-500 for Gate Lights.

SIDEWALK
FIBERGLASS GATE ARMS

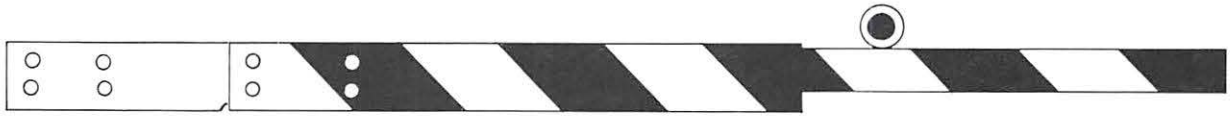

ORDERING REFERENCES—WITH LIGHT AND WIRING

Furnished complete with one gate light; wiring kit, Adapter to mount directly to Model 10 Sidewalk Bracket (3565-111A). See Section 3-500 for Gate Light details and Section 3-400 for Adapter details.

Type of Red and White Reflex-Reflective Cover	Arm Length	WITH TYPE GATE LIGHT		
		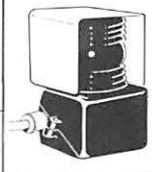 Type 1590	Type 1591	Type 1592
Engineering Grade	3'-10'	38-0026-220	38-0026-221	38-0026-222
	11'-18'	38-0026-223	38-0026-224	38-0026-225
Hi-Intensity Grade	3'-10'	38-0026-226	38-0026-227	38-0026-228
	11'-18'	38-0026-229	38-0026-230	38-0026-231

ORDERING REFERENCES

Type of Red and White Reflex-Reflective Cover	Arm Length	ARM W/ADAPTER ONLY Piece No.	ARM ONLY Piece No.
Engineering Grade	3'-10'	38-0026-199	38-0026-204
	11'-18'	38-0026-232	38-0026-235
Hi-Intensity Grade	3'-10'	38-0026-233	38-0026-236
	11'-18'	38-0026-234	38-0026-237

These arms are furnished with assembly hardware.

ORDERING REFERENCES

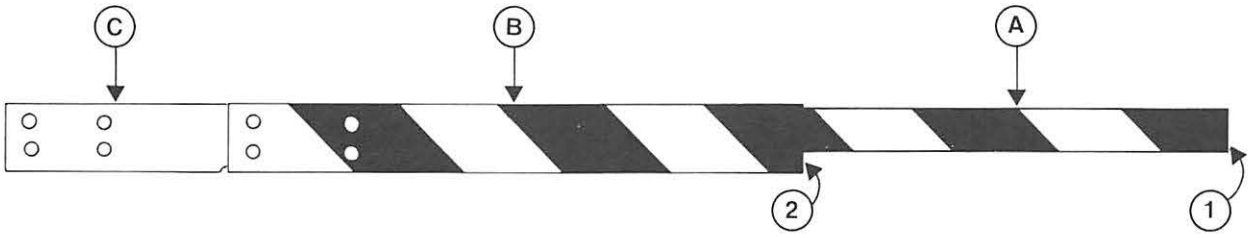

ARM SECTIONS

Type of Red and White Reflex-Reflective Cover	Arm Length	Reference A Tip Section	Reference B Butt Section
Engineering Grade	3'-10'	N/A	38-0026-204
	11'-18'	38-0026-60	38-0026-204
Hi-Intensity Grade	3'-10'	N/A	38-0026-236
	11'-18'	38-0026-111	38-0026-236

Adapter, Ref. C, with hardware to mount to Model 10 Sidewalk Arm Bracket (3565-111A) . . . 38-0026-195.

END PLUGS

Reference 1 Tip (3'-10')	Reference 1A Tip (11'-18')	Reference 2 Butt (11'-18')
38-0026-205	38-0026-51	38-0026-52

WIRING KITS

Arm Length	Piece No.
3'-10'	38-0026-120
11'-18'	38-0026-121

Kits furnished complete with mounting hardware.

HARDWARE

Purpose	Bolt	Washer	Nut
Holding Arm Sections Together	Hex Head, 5/16"-18 x 3/4"	5/16"	N/A
Holding Arm To Adapter	Hex Head, 3/8"-16 x 2 1/4"	3/8"	3/8"-16

All hardware zinc plated, di-chromate dipped.

NOTE: See Section 3-500 for Gate Light Details.

NOTES

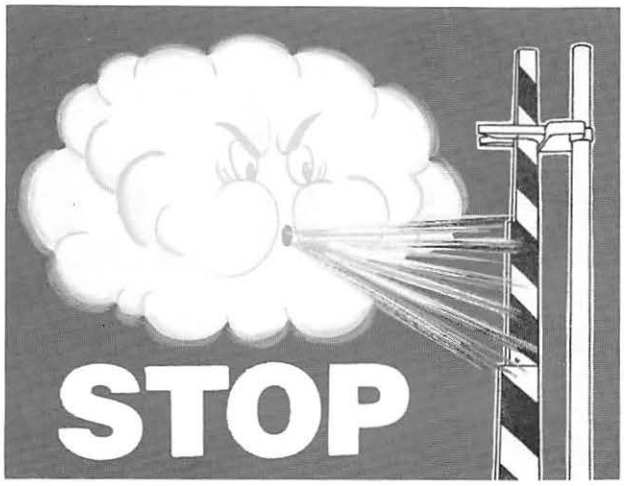

BLOW-DOWNS

HIGH WIND GATE ARM SUPPORT

- For Fiberglass, Aluminum and Aluminum/Fiberglass Gate Arms
- Special Unit for Off-Set Arm on WABCO AL-70 Mechanism
- Will Accommodate 4″ or 5″ Masts
- Lock Bolt Resists Support Turning on Mast
- Non-Binding Design
- Wide Receiving Angle
- Adjustable

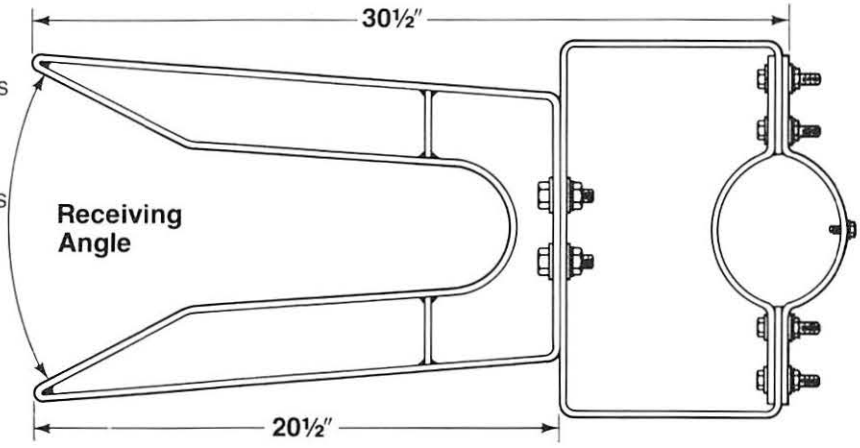

Properly installed and maintained, the W-C-H High Wind Gate Arm Support can significantly reduce wind caused knock-downs of breakaway gate arms. Unique features such as the non-binding design of the Receiving Bracket, the wide receiving angle, and the Lock Bolt combine to keep the potential for arm blockage to a minimum. Alignment of the Receiving Bracket sub-assembly is adjustable. Detailed installation instructions accompany each unit.

Ordering References

Ref. No.	Description	Part No.
A	High Wind Support for Mast-Mounted Mechs. 4″ masts	3565-180-1
B	As above, but for 5″ masts	3565-180
C	Special High Wind Gate Arm Support (AL-70) for 4″ masts	3565-181-1
D	As above, but for 5″ masts	3565-181
E	High Wind Support for use with Pedestal-type Mechs. 4″ masts	3565-188-1
F	As above, but for 5″ masts	3565-188

HIGH WIND
GATE ARM SUPPORT

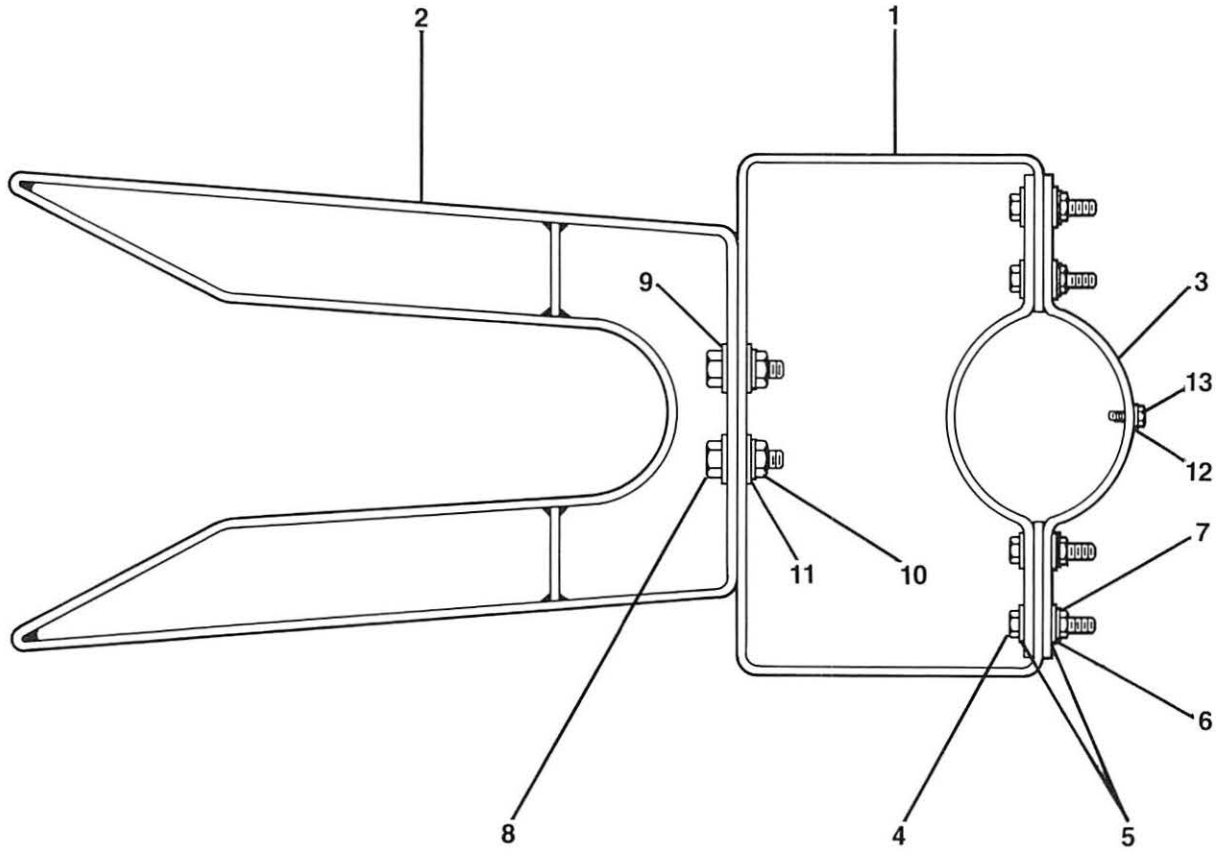

REPLACEMENT PARTS

ORDERING REFERENCES

Ref. No.	Description	Part No.
1	"C" Bracket	3565-175
2	Receiving Bracket	3565-178
3	Pipe Clamp, 4" Mast (2 req'd)	3565-179
3a	Pipe Clamp, 5" Mast (2 req'd)	3565-179-1
4	3/8-16 x 2" Lg HH Mach Screw	
5	3/8" Plain Washer	
6	3/8-16 Hex Nut	
7	3/8" Split Lockwasher	
8	1/2" x 1 1/4" Lg HH Mach Screw	
9	1/2" Plain Washer	
10	1/2-13 Hex Nut	
11	1/2" Split Lockwasher	
12	3/8-16 Hex Nut	
13	3/8-16 x 1 1/2" Lg HH Bolt	

WESTERN-CULLEN-HAYES, Inc.
2700 West 36th Place • Chicago, Illinois 60632

BREAKAWAY ADAPTERS FOR FIBERGLASS ROADWAY ARMS AND MAINTENANCE PARTS

Adapters with and without male pull-apart plug and cable assemblies are listed below. Plug matches female connector furnished on certain W-C-H fiberglass gate arms.

For Model 10 Crossing Gate Signals and other mast-mounted crossing gates using Type 1590 or Type 1591 Gate Lights.

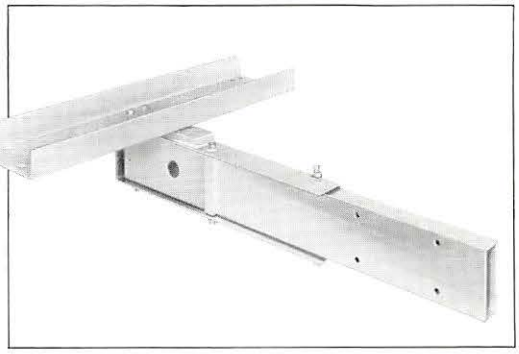

	ORDERING REFERENCE
W/O Plug	3575-177
With Plug	3575-181

For Model 10 Crossing Gate Signals and other mast-mounted crossing gates using Type 1592 Gate Lights (7" dia).

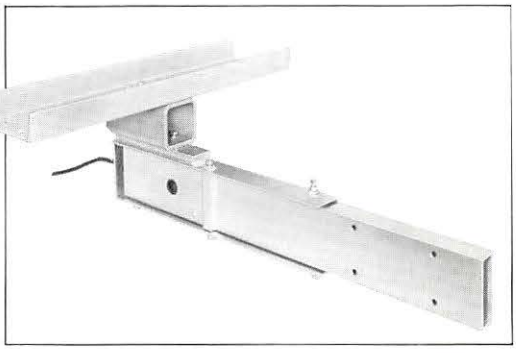

	ORDERING REFERENCE
W/O Plug	3575-179
With Plug	3575-183

For pedestal type crossing gate signals.

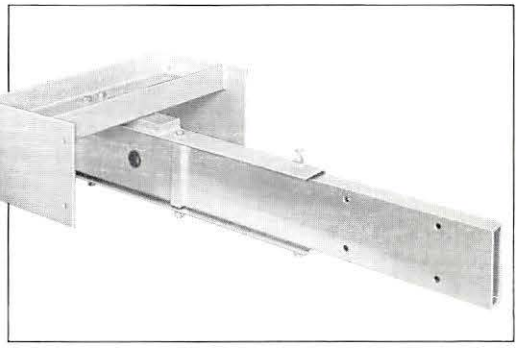

	ORDERING REFERENCE
W/O Plug	3575-178
With Plug	3575-182

See pages 3-404 thru 3-406 for details of above adapters and for maintenance parts ordering references.

BREAKAWAY ADAPTERS FOR MODEL 10A SIGNALS

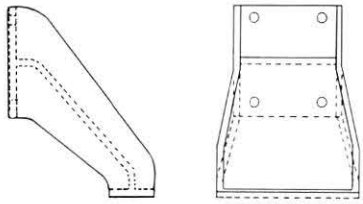

Reference 1

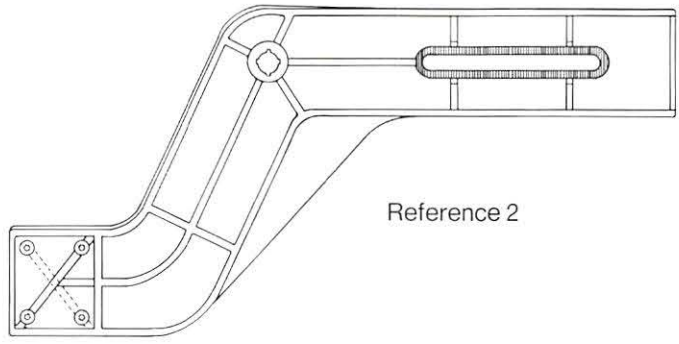

Reference 2

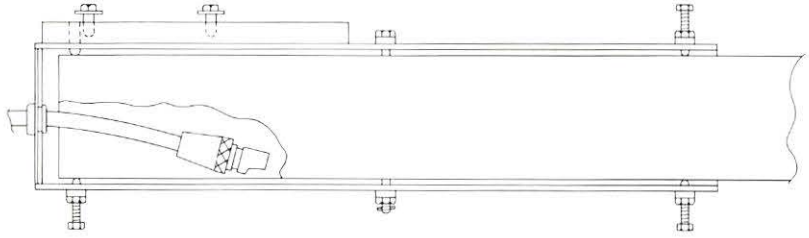

Reference 3

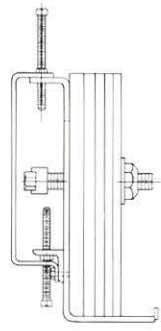

Reference 4

ORDERING REFERENCES

Western-Cullen-Hayes has furnished Type 3569 (GRS Model F) and Type 3570 (WABCO AL-70) Light Weight Gate Mechanism in years past. Many of these mechanisms were equipped with either wood or aluminum gate arms. These mechanisms can be converted to employ W-C-H Fiberglass Gate Arms by using the chart below. This information can also be a guide for ordering spare parts if you already are using W-C-H Fiberglass Arms with these mechanisms.

One of the benefits to using the full W-C-H Conversion Adapter Set for these mechanisms is that with the use of the Adapter Off-Set Bracket (Ref. 1, PN. 3575-128) the arm is brought back to the center of the mast. Doing so helps to reduce the potential of the arm to snag in the crossarm or obscure the main flashing light indication.

The Breakaway Assembly (Ref. 3) specified below is equipped with the male portion of a pull-apart plug set. Arms ordered for use in the conversion process should be equipped with the female portion of the set.

To simplify the ordering process, a counterweight set (Ref. 4) has been developed. All brackets, counterweights and hardware necessary to accommodate up to a 26 foot, W-C-H Fiberglass Arm are included.

Type Mechanism	Type Arm In Service Now	Order components as indicated			
		Reference 1	Reference 2	Reference 3	Reference 4
3569, GRS "F"	Wood	**3575-128**	**38-0032-3**	**3575-187**	**3565-605FG**
	W-C-H Aluminum	N/A	N/A	**3575-187**	N/A
3570, WABCO AL-70	Wood	**3575-128**	**3575-103LW**	**3575-187**	**3565-605FG**
	W-C-H Aluminum	N/A	N/A	**3575-187**	N/A
	WABCO Aluminum	Order Adapter PN: **38-0026-44-2**			

In addition to above items, four each Cap Screw, Hex Head, ½"-13 x 1¼", zinc plated, di-chromate dipped, are required to mount Ref. 1 to Ref. 2.

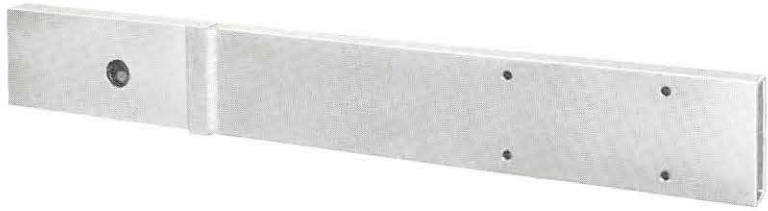

Reference A

Reference B

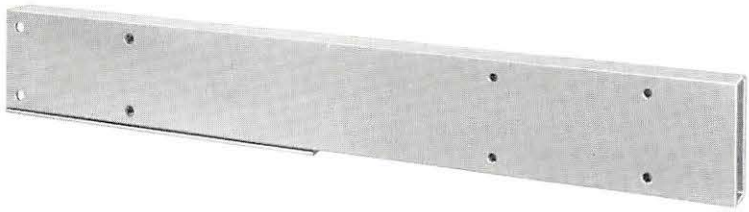

Reference C

Reference D

ORDERING REFERENCES

Special Fillers and Adapters to permit use of Western-Cullen-Hayes Fiberglass Arms on other-make breakaway devices, and on Sidewalk Arm Bracket (PN: 3565-111) of Model 10 Signal.

Reference	Description	Piece No.
A	Adapter for WABCO Breakaway Device	38-0026-44-2
B	Filler for Safetran Breakaway Adapter, Series 076203 (-2X, -8X, -21, -510X)	38-0026-200
C	Adapter for Safetran Breakaway Adapter, Series 076203-501X	38-0026-209
D	Adapter to allow use of Special Fiberglass Arm on Sidewalk Arm Bracket (PN:3565-111) of Model 10 Signal	38-0026-195

BREAKAWAY ADAPTER FOR MODEL 10 SIGNALS
(Use with 4" Dia. Gate Lights)

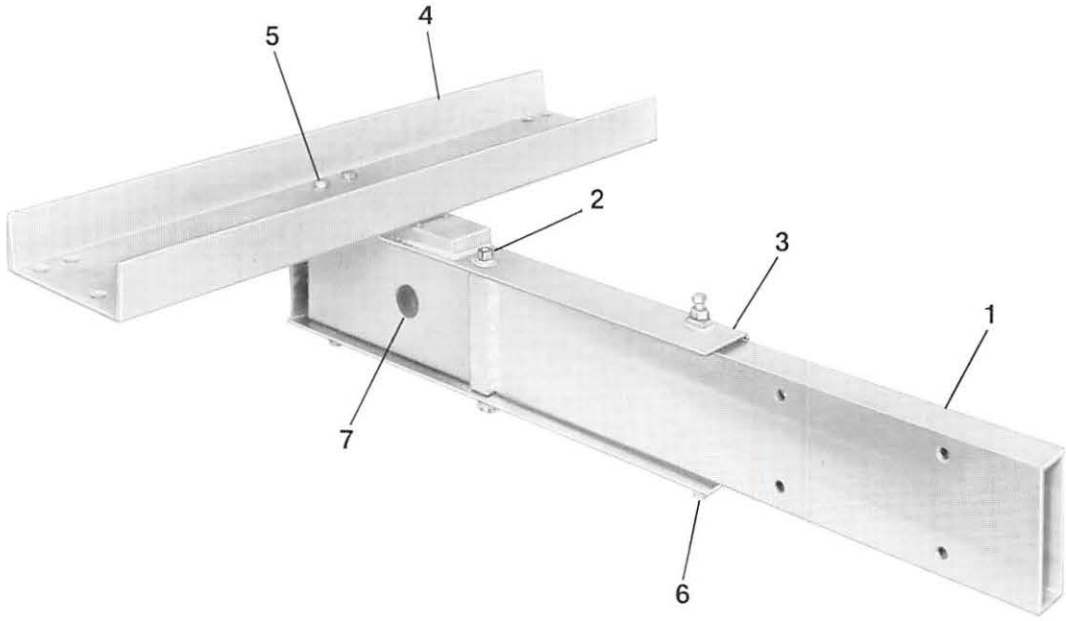

ORDERING REFERENCES

Breakaway Adapter for Model 10 Signals and other mast-mounted crossing gate signals using Type 1590 (fresnel lens) or Type 1591 (4" dia.) Gate Lights. For arms to 26 feet in length. Adapter with and without male plug and cable assembly listed below.

Reference	Description	Piece No.
A	Adapter, complete w/o Male Pull-apart Plug and Cable Assembly	3575-177
B	Same as above, but with Male Pull-apart Plug and Cable Assembly	3575-181
C	Breakaway Sub-Assembly w/o Plug (consists of items 1, 2, 3, 5, 6, 7 and 8 below)	3575-185
D	As Ref. C, but with Male Plug Assembly (consists of items 1, 2, 3, 5, 6, 7, 8, 9 and 10 below)	3575-187
	REPLACEMENT PARTS	
1	Arm Adapter Sleeve	38-0026-44-2
2	Shear Bolt Assembly	3575-170-1
2A	Shear Bolt Assembly for high wind areas	3575-201-1
3	Sleeve Support Weldment	3575-176
4	Adapter Bracket	38-0026-43
5	Hex Head Cap Screw, 7/16-14 x 1" and 7/16" Lock Washer	
6	Hex Head Bolt, 3/8-16 x 1¼" and Lock Nut	
7	Snap Bushing	3575-161
	PARTS NOT SHOWN	
8	Socket Head, Dog Point Set Screw, 7/16-14 x 1"	
9	Male Pull-apart Plug and Cable Assembly	38-0026-121
10	Strain Relief Bushing for Pull-apart Plug	3575-160

BREAKAWAY ADAPTER FOR MODEL 10 SIGNALS
(Use with 7" dia. Gate Lights)

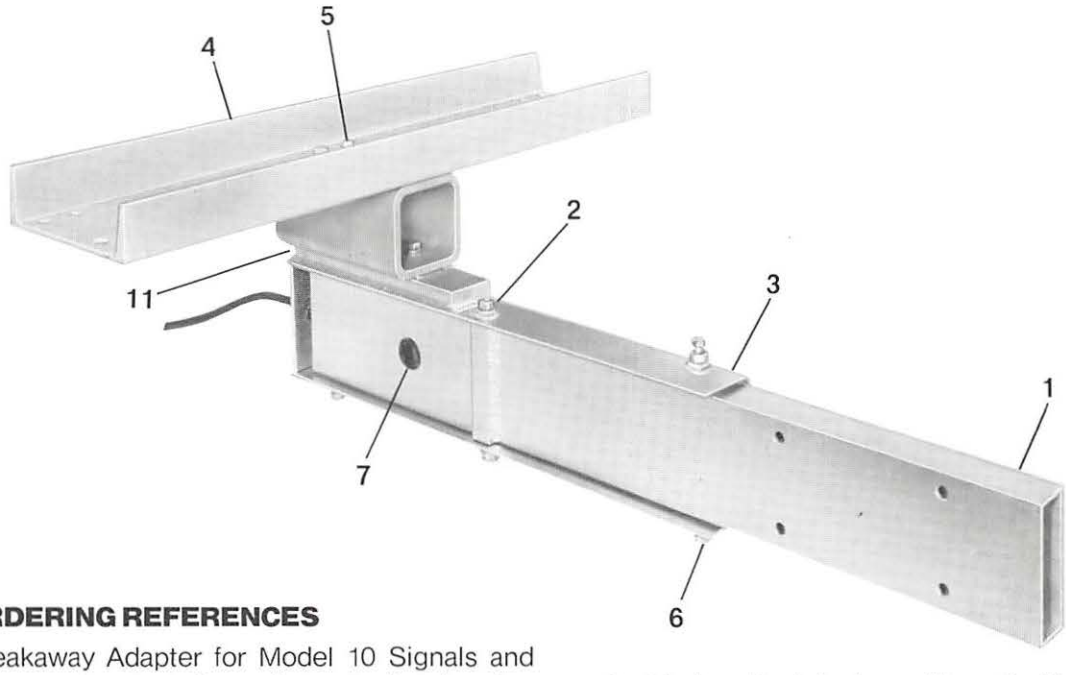

ORDERING REFERENCES

Breakaway Adapter for Model 10 Signals and other mast-mounted crossing gate signals using Type 1592 (7" dia.) Gate Lights. For arms to 26 feet in length. Adapters with and without male plug and cable assembly listed below.

Reference	Description	Piece No.
A	Adapter, complete w/o Male Pull-apart Plug and Cable Assembly	3575-179
B	As above, but with Male Pull-apart Plug and Cable Assembly	3575-183
C	Breakaway Sub-Assembly w/o Plug (consists of items 1, 2, 3, 5, 6, 7 and 8 below)	3575-185
D	As Ref. C, but with Male Plug Assembly (consists of items 1, 2, 3, 5, 6, 7, 8, 9 and 10 below)	3575-187
	REPLACEMENT PARTS	
1	Arm Adapter Sleeve	38-0026-44-2
2	Shear Bolt Assembly	3575-170-1
2A	Shear Bolt Assembly for high wind areas	3575-201-1
3	Sleeve Support Weldment	3575-176
4	Adapter Bracket	38-0026-43
5	Hex Head Cap Screw, 7/16-14 x 1" and 7/16" Lock Washer	
6	Hex Head Bolt, 3/8-16 x 1¼" and Lock Nut	
7	Snap Bushing	3575-161
11	Spacer	38-0026-142
	PARTS NOT SHOWN	
8	Socket Head, Dog Point Set Screw, 7/16-14 x 1"	
9	Male Pull-apart Plug and Cable Assembly	38-0026-121
10	Strain Relief Bushing for Pull-apart Plug	3575-160

BREAKAWAY ADAPTER FOR PEDESTAL-TYPE GATE SIGNALS

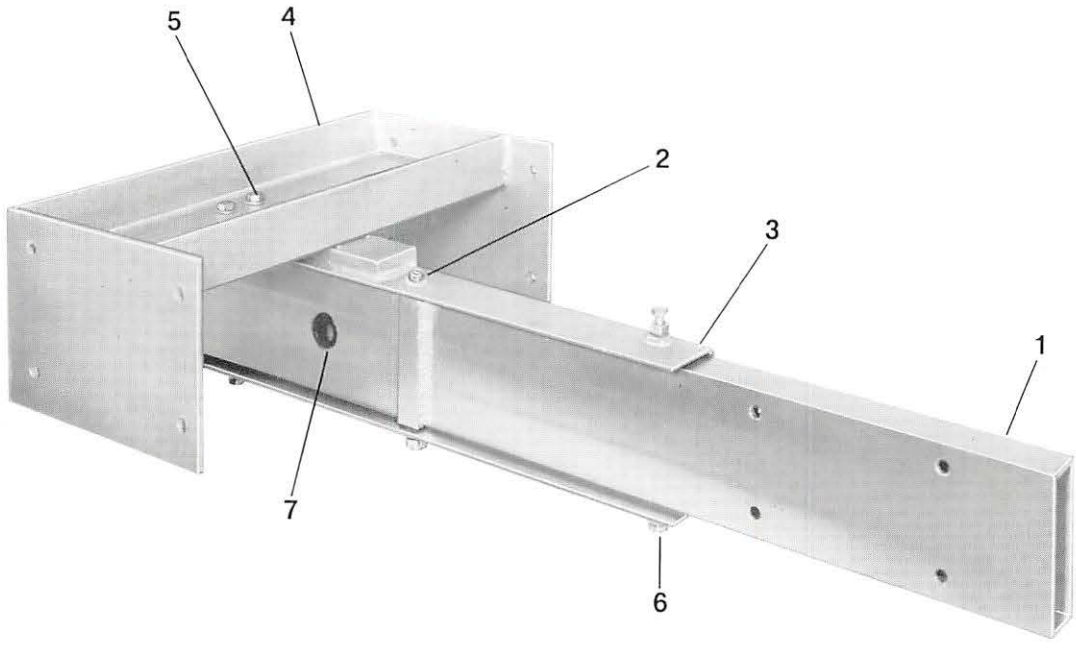

ORDERING REFERENCES

Breakaway Adapter for pedestal-type crossing gate signals. For arms to 26 feet in length. Adapters with and without male plug and cable assembly listed below.

Reference	Description	Piece No.
A	Adapter, complete w/o Male Pull-apart Plug and Cable Assembly	3575-178
B	As above, but with Male Pull-apart Plug and Cable Assembly	3575-182
C	Breakaway Sub-Assembly w/o Plug (consists of items 1, 2, 3, 5, 6, 7 and 8 below)	3575-185
D	As Ref. C, but with Male Plug Assembly (consists of items 1, 2, 3, 5, 7, 9 and 10 below)	3575-187
	REPLACEMENT PARTS	
1	Arm Adapter Sleeve	38-0026-44-2
2	Shear Bolt Assembly	3575-170-1
2A	Shear Bolt Assembly for high wind areas	3575-201-1
3	Sleeve Support Weldment	3575-176
4	Adapter Bracket	38-0026-91
5	Hex Head Cap Screw, 7/16-14 x 1" and 7/16" Lock Washer	
6	Hex Head Bolt, 3/8-16 x 1¼" and Lock Nut	
7	Snap Bushing	3575-161
	PARTS NOT SHOWN	
8	Socket Head, Dog Point Set Screw, 7/16-14 x 1"	
9	Male Pull-apart Plug and Cable Assembly	38-0026-121
10	Strain Relief Bushing for Pull-apart Plug	3575-160

BREAKAWAY ADAPTERS FOR ALUMINUM/FIBERGLASS ROADWAY ARMS AND MAINTENANCE PARTS

Adapters with and without male pull-apart plug and cable assemblies are listed below. Plug matches female connector furnished on certain W-C-H aluminum/fiberglass gate arms.

For Model 10 Crossing Gate Signals and other mast-mounted crossing gates using Type 1590 or Type 1591 Gate Lights.

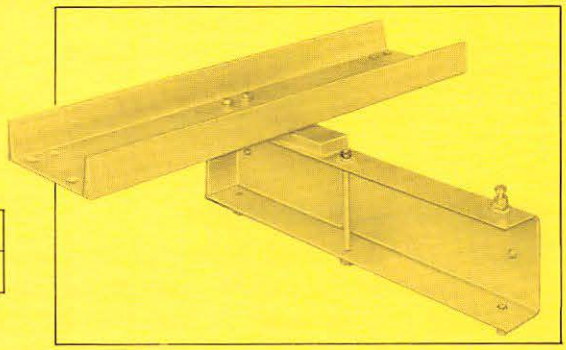

	ORDERING REFERENCE
W/O Plug	3575-250
With Plug	3575-253

For Model 10 Crossing Gate Signals and other mast-mounted crossing gates using Type 1592 Gate Lights (7" dia.).

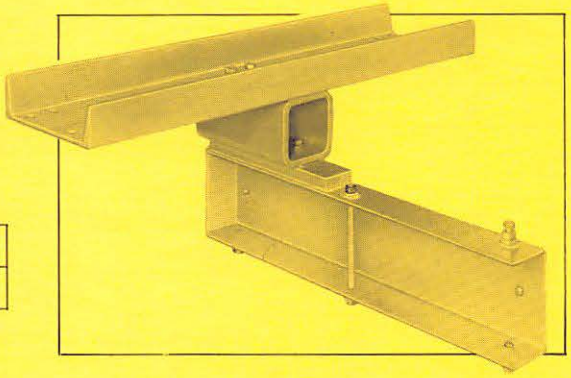

	ORDERING REFERENCE
W/O Plug	3575-252
With Plug	3575-255

For pedestal type crossing gate signals.

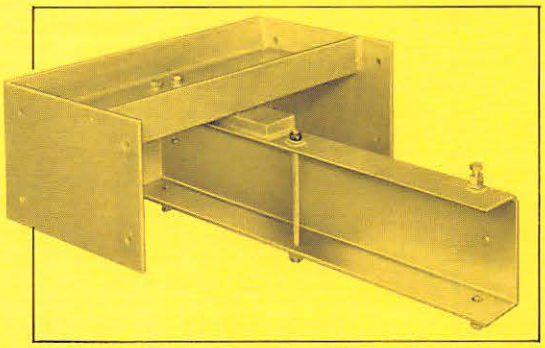

	ORDERING REFERENCE
W/O Plug	3575-251
With Plug	3575-254

See pages 3-412 thru 3-414 for details of above adapters and for maintenance parts ordering references.

WESTERN-CULLEN-HAYES, Inc.
2700 West 36th Place • Chicago, Illinois 60632

ALUMINUM/FIBERGLASS GATE ARM

BREAKAWAY ADAPTER FOR MODEL 10 SIGNALS
(Use with 4" Dia. Gate Lights)

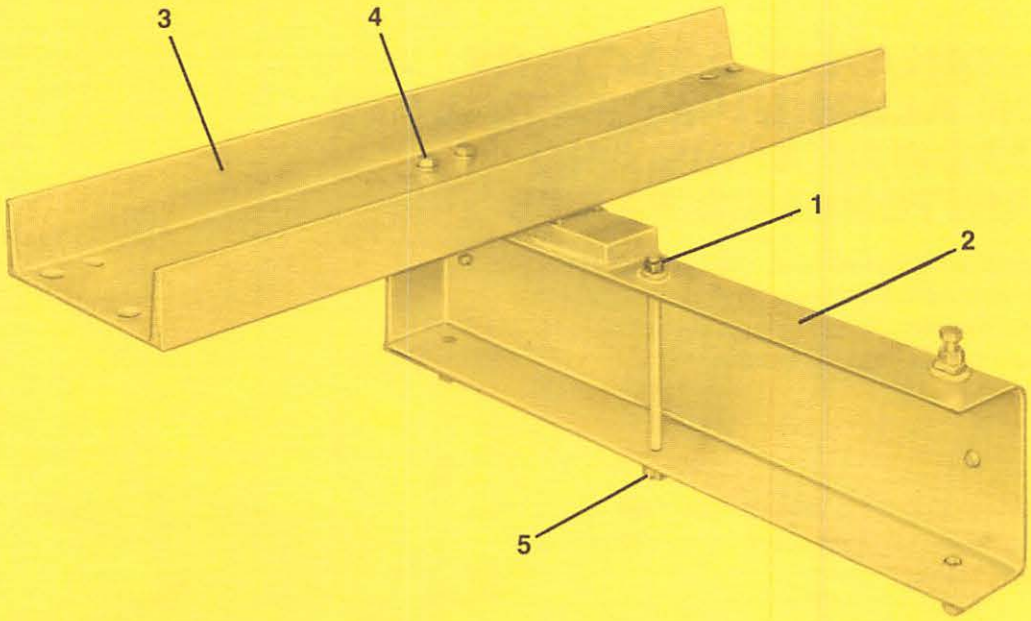

ORDERING REFERENCES

Breakaway Adapter for Model 10 Signals and other mast-mounted crossing gate signals using Type 1590 (fresnel lens) or Type 1591 (4" dia.) Gate Lights. For arms to 33 feet in length. Adapter with and without male plug and cable assembly listed below.

Reference	Description	Piece No.
A	Adapter, complete w/o Male Pull-apart Plug and Cable Assembly	3575-250
B	Same as above, but with Male Pull-Apart Plug and Cable Assembly	3575-253
C	Breakaway Sub-Assembly w/o Plug (consists of items 1, 2, 4, 5, 6 below)	3575-248
D	As Ref. C, but with Male Plug Assembly (consists of items 1, 2, 4, 5, 6, 7, 8 below)	3575-249
	REPLACEMENT PARTS	
1	Shear Bolt Assembly for arms to 26' in length	3575-170-1
1A	Shear Bolt Assembly for arms 27'-33' in length	3575-201-1
2	Sleeve Support Weldment	3575-176
3	Adapter Bracket	38-0026-43
4	Hex Head Cap Screw, 7/16-14 x 1" and 7/16" Lock Washer	
5	Hex Head Bolt, 3/8-16 x 1¼" and Lock Nut	
	PARTS NOT SHOWN	
6	Socket Head, Dog Point Set Screw, 7/16-14 x 1"	3575-256
7	Male Pull-apart Plug and Cable Assembly	38-0026-121
8	Strain Relief Bushing for Pull-apart Plug	3575-160

WESTERN-CULLEN-HAYES, Inc.
2700 West 36th Place • Chicago, Illinois 60632

Type 1592, showing assembled unit

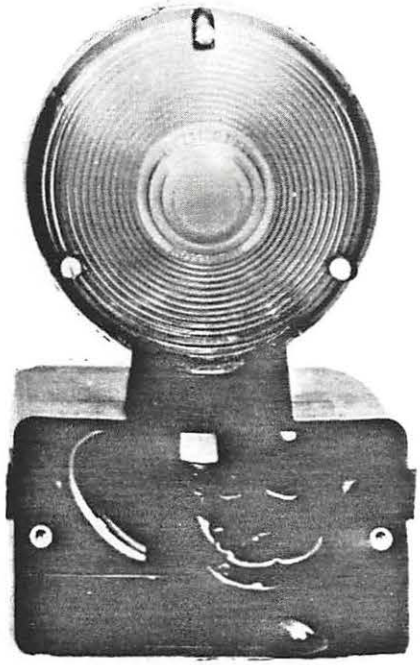

Type 1591, with cover off showing HEAVY-WALL construction

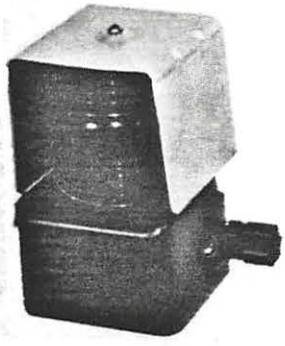

The Ugly One (Type 1590)

TRY THE GATE LIGHTS WITH A DIFFERENCE

- **Rugged Heavy-Wall (.12″), non-conductive glass fiber-reinforced plastic box.**
- **Anti-turn flange holds light head in place.**
- **The Ugly One, for extra-high vandalism areas.**

Especially with aluminum or aluminum/fiberglass gate arms, grounds in gate lights can be a problem. W-C-H has solved this problem with our new HEAVY-WALL plastic gate light box. We have also addressed vandalism with the Anti-turn flange that holds the light head in place. For the really high vandalism areas, try our "Ugly One" (type 1590). It is especially rugged, and so ugly no one wants to steal it. Prompt shipments are made from stock.

DESCRIPTION	ORDERING REFERENCE (set of 3)
4″ Dia. Flat Gate Light	1591-50
7″ Dia. Flat Gate Light	1592-50
The Ugly One	1590-50

WC Hayes

WESTERN-CULLEN-HAYES, Inc.
2700 West 36th Place • Chicago, Illinois 60632
Telephone: 312/254-9600 • Telex 25-3206

GATE LIGHTS AND MAINTENANCE PARTS

TYPE 1590

The Type 1590 Gate Light is equipped with a 3⅝" diameter, 360 degree, Red Fresnel Lens, shielded to provide indication to cross traffic only. The shield is adjustable to any position required to shut off the light beam along the railroad. It can be removed and discarded if desired. Each light unit weighs 1¼ pounds with shield. The light is attached to the gate arm by two screws or machine bolts through holes accessible with the cover removed. Lamp socket accommodates S.C.B.B. lamps having 1¼" light center length and S-8 and S-11 bulb. Wire nuts are provided to secure gate arm cable to wires from the socket. Cable grips of appropriate diameter are provided with the junction box. The base housing and cover are of molded, high-impact, "Cycolac", the Fresnel Lens is of polycarbonate plastic. All necessary mounting hardware is furnished.

Description	Piece No.
Set of three Type 1590 Gate Lights	**1590-50**

TYPE 1591

Type 1591 Gate Light is equipped with a 4⅛" diameter, red bullseye lens. Due to the relative flatness of the shape of the gate light, virtually no light beam is directed toward oncoming trains. Each light weighs approximately 1¾ pounds. The light is attached to the gate arm by two screws or machine bolts through holes accessible with the junction box cover removed. Lamp socket accommodates S.C.B.B. lamps having 1¼" light center length and S-8 or S-11 bulb. Wire nuts are provided to secure gate arm cable to wires from the socket. Cable grips of appropriate diameter are provided with the junction box. The lens is cast polycarbonate plastic. All necessary mounting hardware is furnished.

Description	Piece No.
Set of three Type 1591 Gate Lights	**1591-50**

TYPE 1592

Type 1592 Gate Light is equipped with a 7" diameter, red hi-intensity lens. Due to the relative flatness of the shape of the gate light, virtually no light beam is directed toward oncoming trains. Each light weighs approximately 1⅝ pounds. The light is attached to the gate arm by two screws or machine bolts through holes accessible with the junction box cover removed. Lamp socket accommodates S.C.B.B. lamps having 1¼" light center length and S-8 or S-11 bulb. Wire nuts are provided to secure gate arm cable to wires from the socket. Cable grips of appropriate diameter are provided with the junction boxes. The light frame and lens are cast polycarbonate plastic. All necessary mounting hardware is furnished.

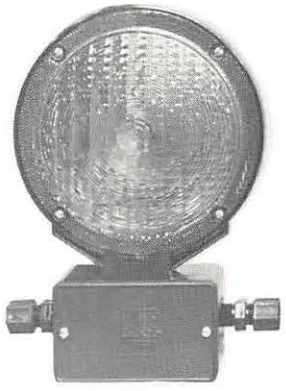

Description	Piece No.
Set of three Type 1592 Gate Lights	**1592-50**

WESTERN-CULLEN-HAYES, Inc.
2700 West 36th Place • Chicago, Illinois 60632

TYPE 1590 GATE LIGHT

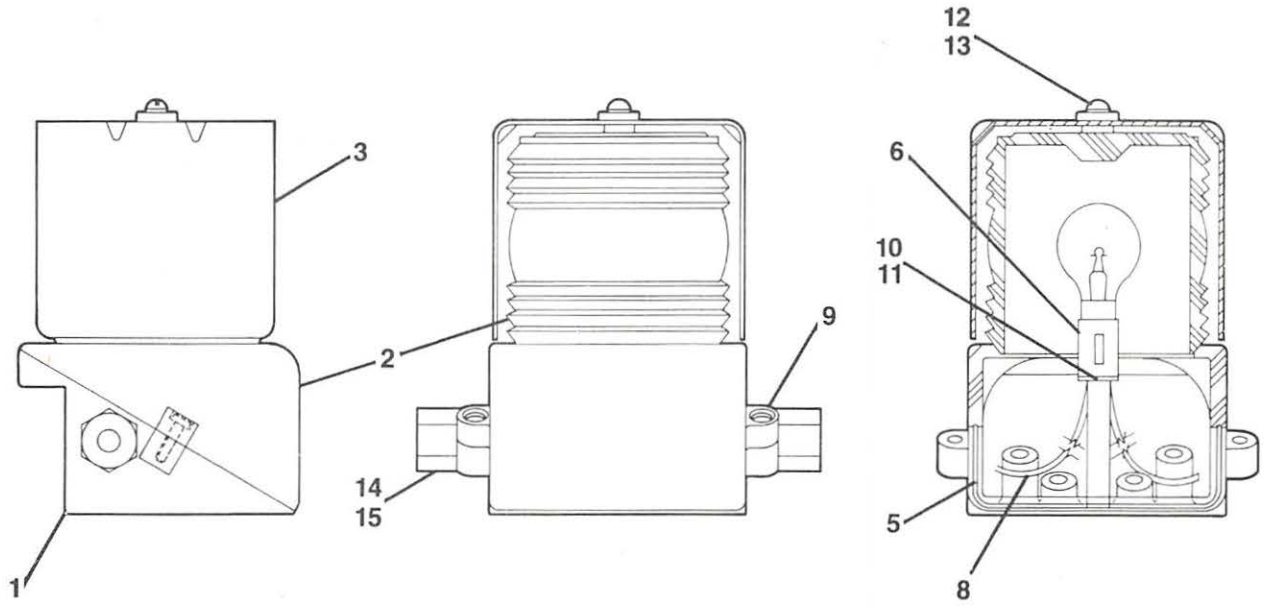

Ref. No.	Description	Piece No.
A	Tip Light (one cable grip, one hole plug)	1590-A
B	Mid and Butt Light (Two cable grips)	1590-B
	REPLACEMENT PARTS	
1	Molded Base with Gasket only	1590-1C
2	Molded Cover and Lens Assembly	1590-7
3	Aluminum Shield	1590-4
5	Gasket Only	1590-6A
6	Lamp Socket	90809
8	Wire Leads	
9	Screw, No. 10-24x½" lg. Fil. Hd., Brass, N.P.	
10	Screw, No. 5-40x½" lg. Fil. Hd., Brass, N.P.	
11	Lockwasher, No. 5, Stl., Cad Pl.	
12	Screw, No. 10-24x¼" lg. Rd. Hd., Brass, N.P.	
13	Washer, External Star, No. 10, Cad Pl.	
14	Cable Grip	1590-35-A
15	Ferrule Nut	1590-35-B
16	Hole Plug, Plastic (Not shown)	1590-9
17	Hardware Kit (Not shown)	1590-25

WESTERN-CULLEN-HAYES, Inc.
2700 West 36th Place • Chicago, Illinois 60632

TYPE 1591 GATE LIGHT

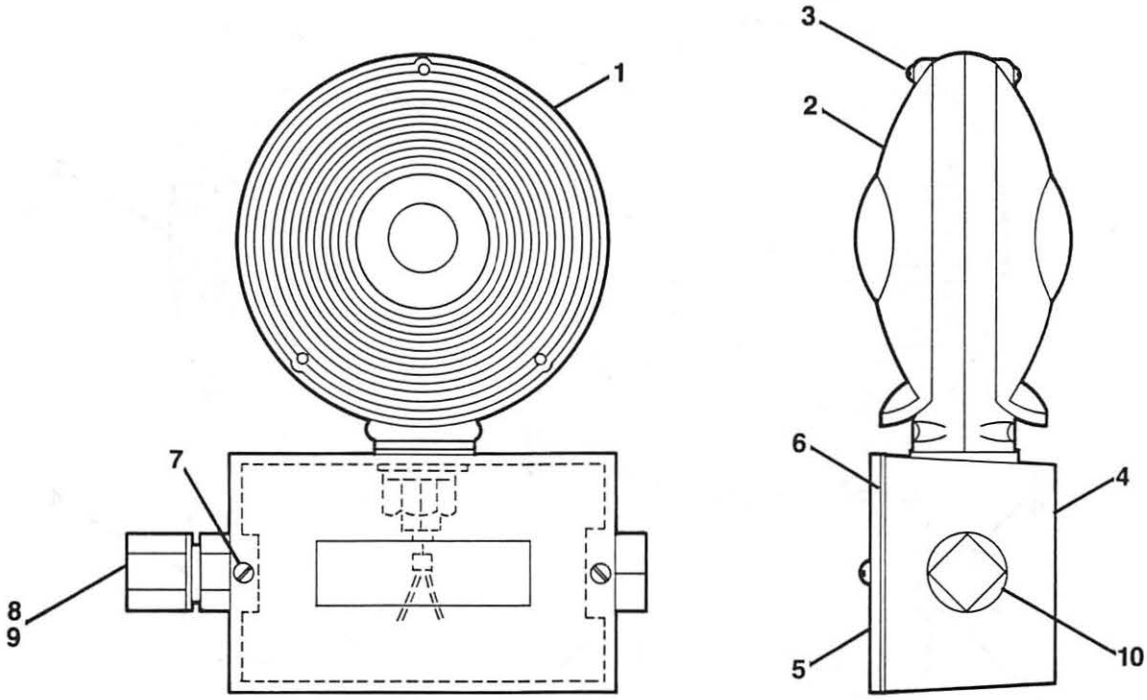

Ref. No.	Description	Piece No.
A	Tip Light (one cable grip, one hole plug)	1591-3
B	Mid and Butt Light (two cable grips)	1591-4

REPLACEMENT PARTS

1	Light Head Assy.	90837
2	Lens Only	90837-1
3	6-32 x 5/8" Rd. Hd. Mach. Scr.	
4	Light Junction Box	1591-30-M
5	Light Junction Box Cover	1591-31
6	Gasket	1591-32
7	8-32 x 3/8" Rd. Hd. Mach. Scr.	
8	Male Connector	1590-35-A
9	Ferrule Nut	1590-35-B
10	Hole Plug	1590-9
11	Hardware Kit (Not shown)	1590-25

WESTERN-CULLEN-HAYES, Inc.
2700 West 36th Place • Chicago, Illinois 60632

TYPE 1592 GATE LIGHT

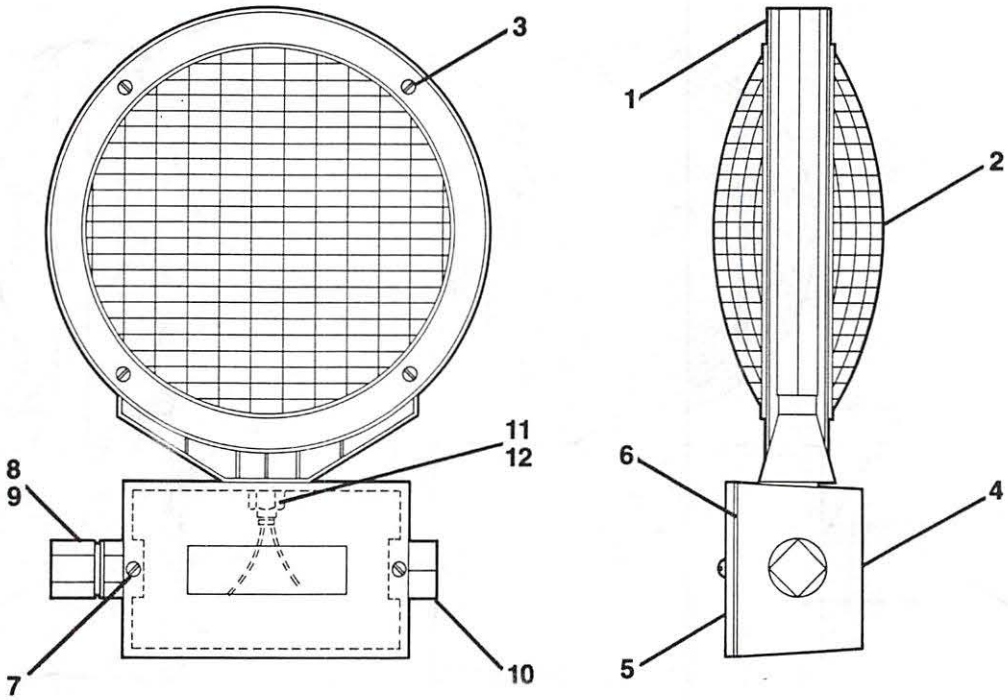

Ref. No.	Description	Piece No.
A	Tip Light (one cable grip, one hole plug) shown	1592-3
B	Mid and Butt Light (two cable grips)	1592-4
	REPLACEMENT PARTS	
1	Light Frame and Socket	90847-2
2	Lens, Only	90847-1
3	8-32 x ¼" Rd. Hd. Mach. Scr.	
4	Light Junction Box	1591-30-M
5	Light Junction Box Cover	1591-31
6	Gasket	1591-32
7	8-32 x ⅜" Rd. Hd. Mach. Scr.	
8	Male Connector	1590-35-A
9	Ferrule Nut	1590-35-B
10	Hole Plug	1590-9
11	7/16" Ext. Lockwasher	
12	7/16" Elastic Stop Nut	
13	Hardware Kit (Not shown)	1590-25

WESTERN-CULLEN-HAYES, Inc.
2700 West 36th Place • Chicago, Illinois 60632

WESTERN-CULLEN-HAYES Complete CROSSING WARNING SYSTEMS

Assure Maximum Safety for Personnel, Plant and Equipment...

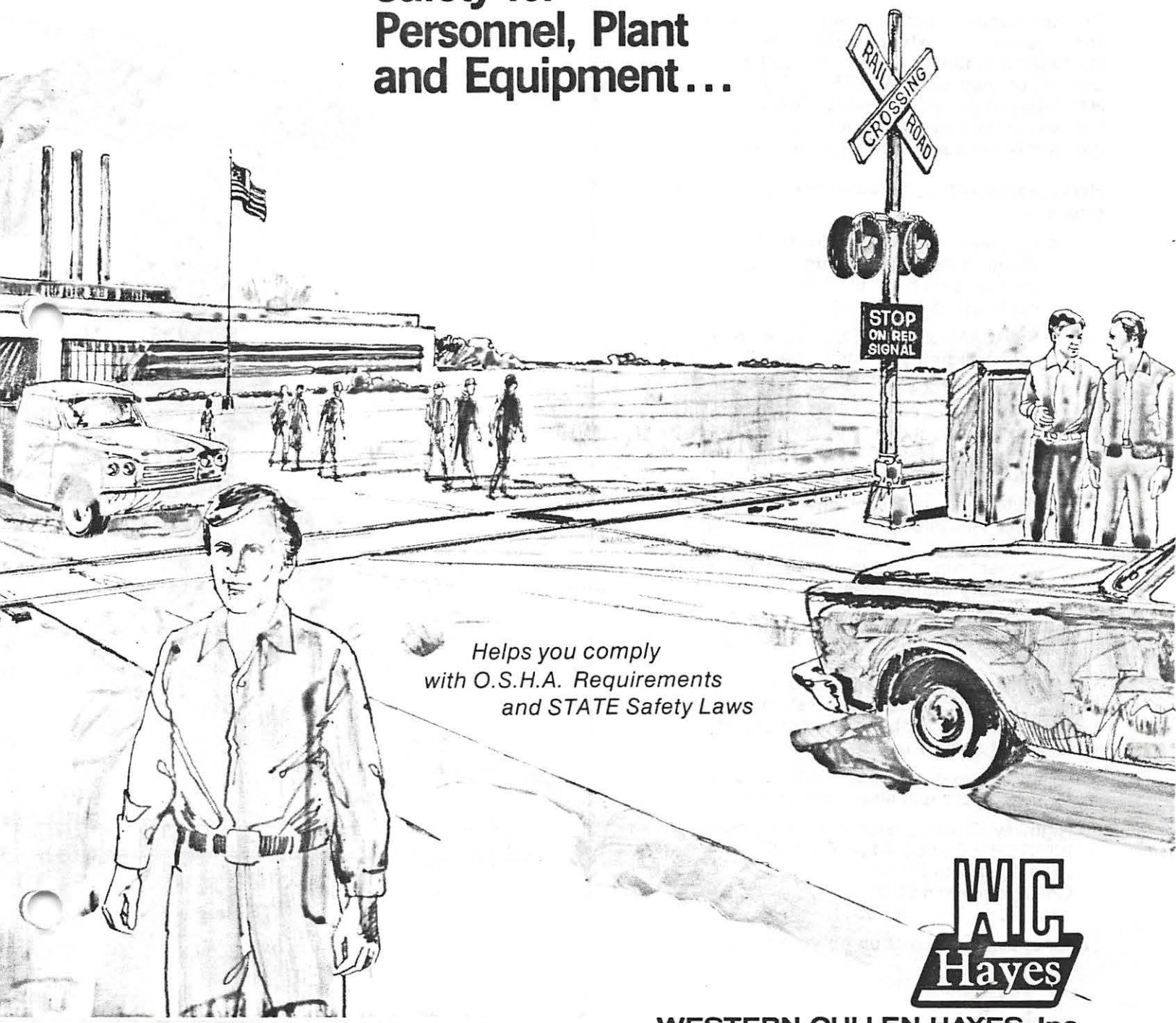

Helps you comply with O.S.H.A. Requirements and STATE Safety Laws

WC Hayes

WESTERN-CULLEN-HAYES, Inc.

WESTERN-CULLEN-HAYES RAILROAD CROSSING WARNING SYSTEMS for PEOPLE, PLANT and EQUIPMENT

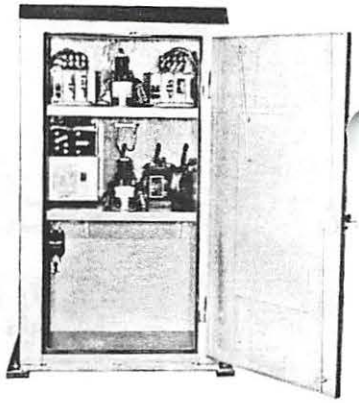

Growing concern and strict legislation for safety and security in industrial operations has directed increased attention for road—railroad crossing warning on plant sites. WESTERN-CULLEN-HAYES has more than 50 years of experience in highway crossing warning plus a reputation for the most dependable products in the field.

Here are a few of the products and services we can offer you.

- Complete manually operated Crossing Warning Packages for simple installation by your own plant electricians and maintenance personnel.
- Special Engineering Service to design safe crossing systems tailored to your specific needs.
- Train-Activated Crossing Warning Equipment—including latest design combining solid state electronics with proven railroad hardware.
- Automatic Door Protection Systems with Door Activated Derails, Warning Lights and Audible Signals—designed to prevent runaway cars from entering plant or heavy traffic areas.
- Installation Service or Installation Supervision (optional at additional cost).

WESTERN-CULLEN-HAYES Products and Services can be tailored to solve almost any rail—highway crossing problem and comply with government agency requirements.

Take advantage of WESTERN-CULLEN-HAYES experience and capabilities, call or write:

Highway Crossing Signal System Specialist
WESTERN-CULLEN-HAYES, INC.
2700 West 36th Place
Chicago, Illinois 60632
Area Code 312—254-9600

...for specific information on your needs.

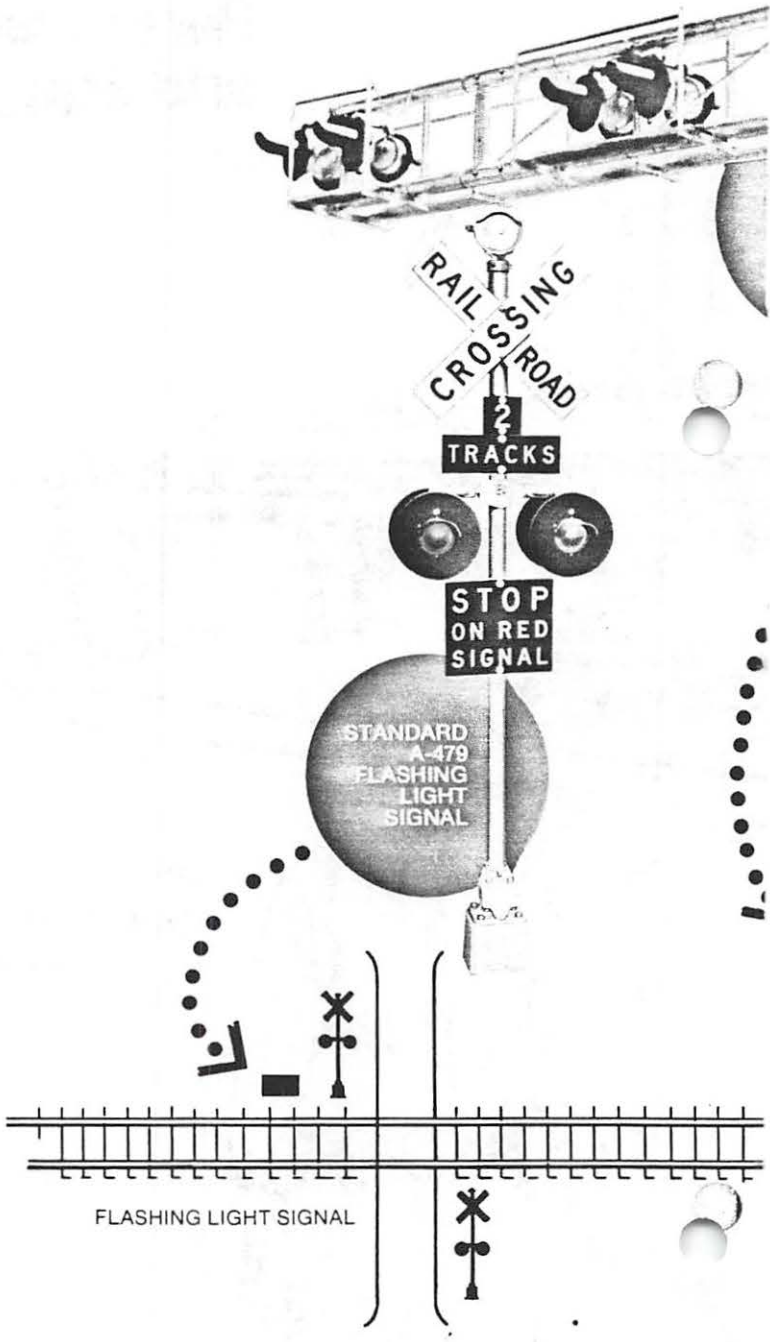

FLASHING LIGHT SIGNAL

- W-C-H factory wired cases are ready for cable installation
- All signal cases factory tested to assure dependable operation
- Extra heavy construction protects contents against vandalism

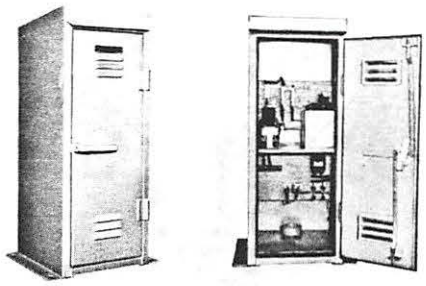

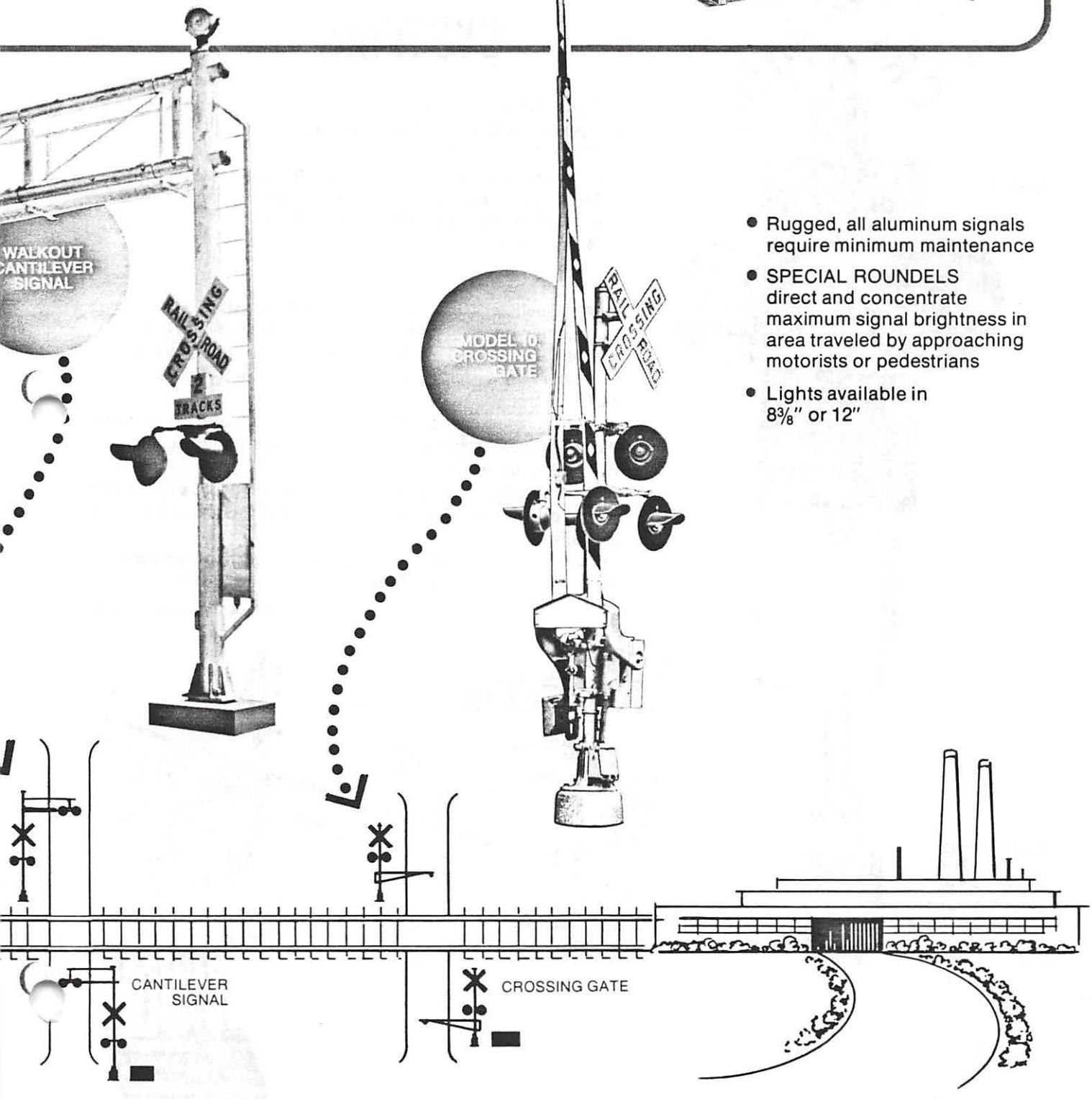

- Rugged, all aluminum signals require minimum maintenance
- SPECIAL ROUNDELS direct and concentrate maximum signal brightness in area traveled by approaching motorists or pedestrians
- Lights available in $8\frac{3}{8}$" or 12"

Manual Control Industrial CROSSING WARNING SYSTEMS

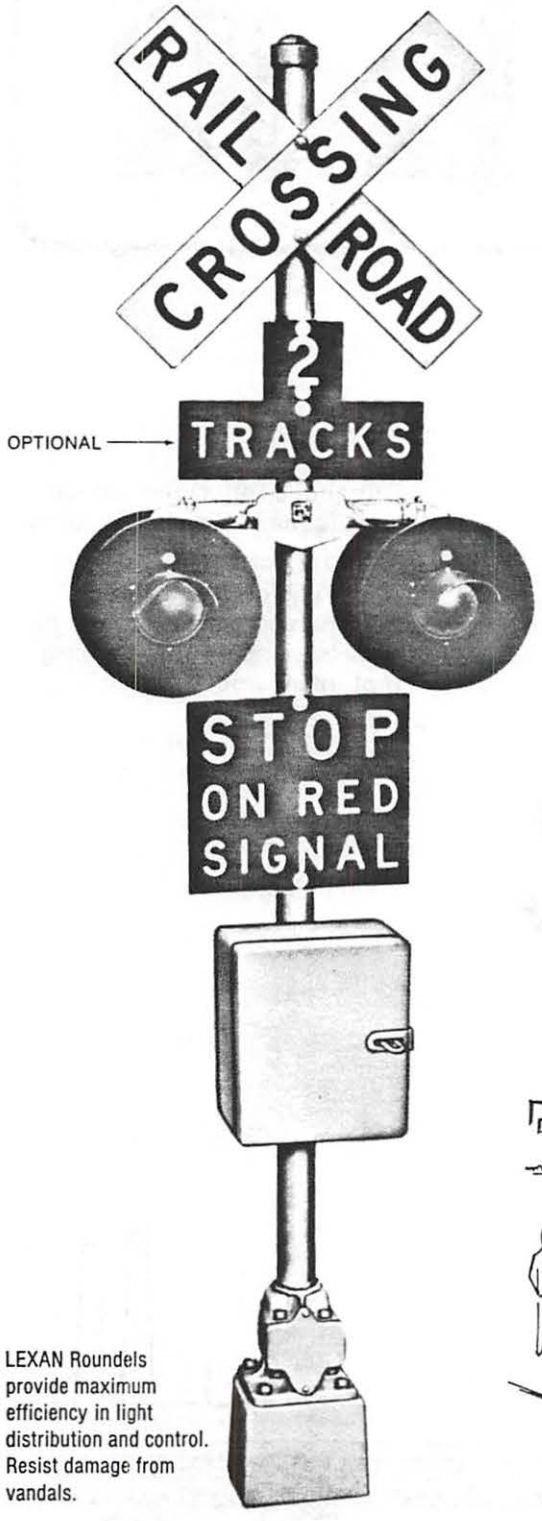

LEXAN Roundels provide maximum efficiency in light distribution and control. Resist damage from vandals.

- **Lights Available in 8⅜" or 12"**
- **Provides SAFE, Dependable Warning at Economical Cost!**
- **Helps comply with new safety regulations.**
- **Factory-wired control case for installation by plant maintenance personnel, or W-C-H.**
- **Manual Control**

Rugged "lifetime" aluminum construction (from base to pinnacle) requires minimum maintenance. The W-C-H Flashing Light assembly, recognized as standard of the railroad industry is included in the system and equipped with impact-resistant "LEXAN"* type roundels.

Unique characteristics of the Roundels direct and concentrate maximum signal brightness in area traveled by approaching motorists or pedestrians.

Comprehensive package is factory wired, shipped ready to install by your own personnel or for installation by W-C-H trained crossing specialists.

Offers you an efficient safety package combining increased crossing warning and reliable performance for an economical price.

*TM of General Electric Company

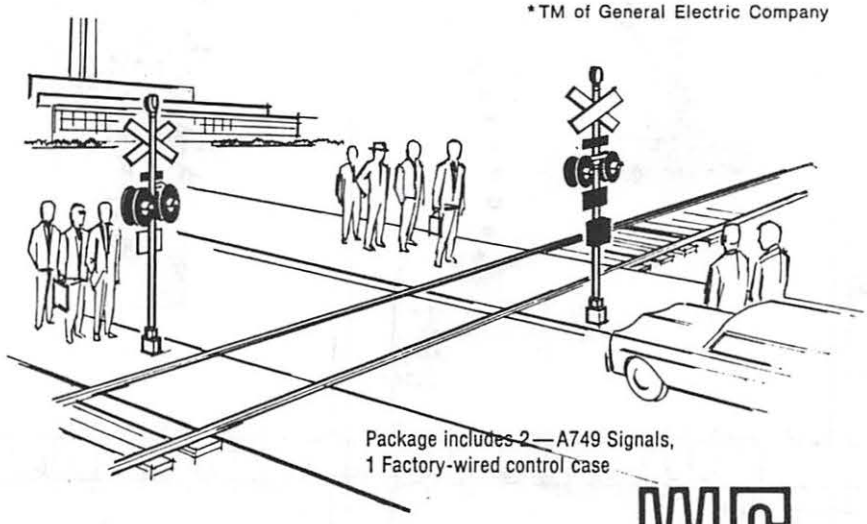

Package includes 2—A749 Signals, 1 Factory-wired control case

WC Hayes

WESTERN-CULLEN-HAYES, Inc.
2700 West 36th Place • Chicago, Illinois 60632 • Telephone: 312/254-9600 • Telex 25-3206

WESTERN-CULLEN-HAYES
"Model 0333" HIGHWAY CROSSING BELL

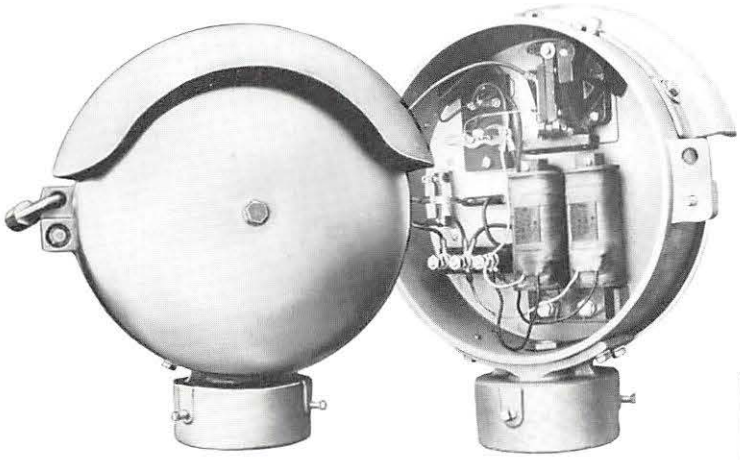

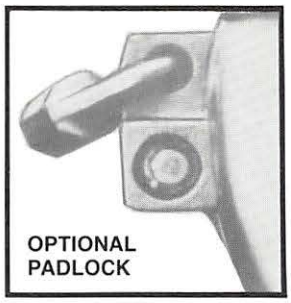

Western-Cullen presents a refined and improved highway crossing bell. Our model 333 incorporates the design features of our earlier Model 222 with the addition of an adjustable ringing rate (average 200 strokes per minute), a condenser as a standard item, an improved intensity and a special locking feature which allows the bell cover to be secured with a standard AAR hex nut wrench and a padlock (padlock optional). See photo. Loud and soft tone hammers are available.

Constructed of lightweight, rust-proof cast aluminum, the Model 0333 Bell is a low-maintenance product. It is adaptable to any signal, can be mounted on the mast or wall.

SPECIFICATIONS

Conforms to applicable sections of A.A.R. Signal Specification 3.2.60, Highway Crossing Bell. Operating instructions and wiring schematic are included on the inside cover of every bell.

Voltage–6-16 VDC
Audio Output–Approx. 90 dbA @ 10 feet (Loud Tone)
Power–600 mA
Dimensions–1'3" H x 1'2" W x 7" D
Weight–Approx. 27 pounds

HOW TO ORDER

Ref. No.	Description	Piece No.
A	Model 0333 Bell, for top of post or pipe mounting	
	For 4" ID pipe, 4½" OD pole	**0333CR**
	For 5" ID pipe, 5⅝" OD pole	**0333FR**
	For 6" ID pipe, 6¾" OD pole	**0333HR**
B	Model 0333 Bell, for wall or side-of-pole mounting	
	For wall mounting only	**0333ARP**
	For wall or side of 4½" OD pole mounting	**0333ARP-4**
	For wall or side of 5⅝" OD pole mounting	**0333ARP-5**
	For wall or side of 6¾" OD pole mounting	**0333ARP-6**

Specify: Loud or Soft Tone Hammer

MOUNTING ACCESSORIES
For CR Version

Reference A

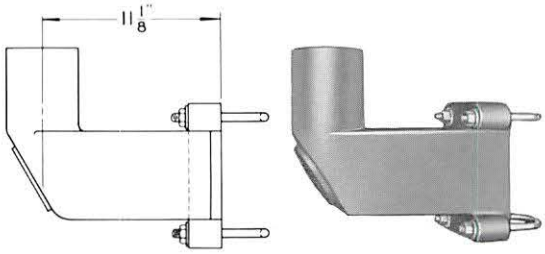

Reference B

Reference C

Special accessories are available for the Model 0333CR version (for top of 4″ ID pipe mounting) of this bell. They permit the mounting of the bell in a variety of locations.

Ref. No.	Description	Piece No.
A	Gooseneck Bracket for mounting to:	
	3″ ID pipe	**873-27B**
	3½″ ID pipe	**873-28B**
	4″ ID pipe	**873-29B**
	5″ ID pipe	**873-30B**
	6″ ID pipe	**873-31B**
	8″ ID pipe	**873-32B**
B	Reducer 5″ to 4″ ID pipe	**990-63**
C	Flat Surface Mounting Adapter	**216-2**

MOUNTING APPLICATIONS
For ARP Version

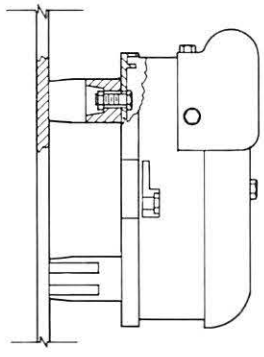

BELL MOUNTED ON WALL

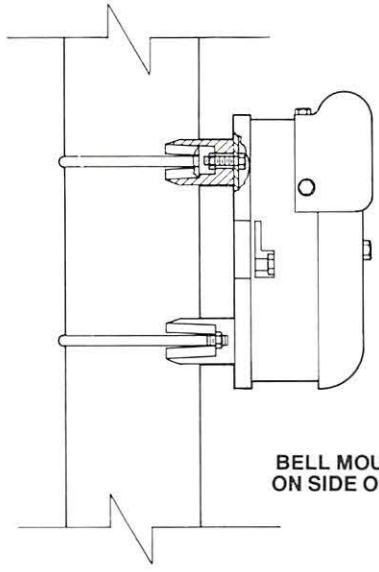

BELL MOUNTED ON SIDE OF PIPE

WESTERN-CULLEN-HAYES, Inc.
2700 West 36th Place • Chicago, Illinois 60632

PARTS LIST FOR MODEL 0333 WARNING BELL FOR POST OR PIPE MOUNTING

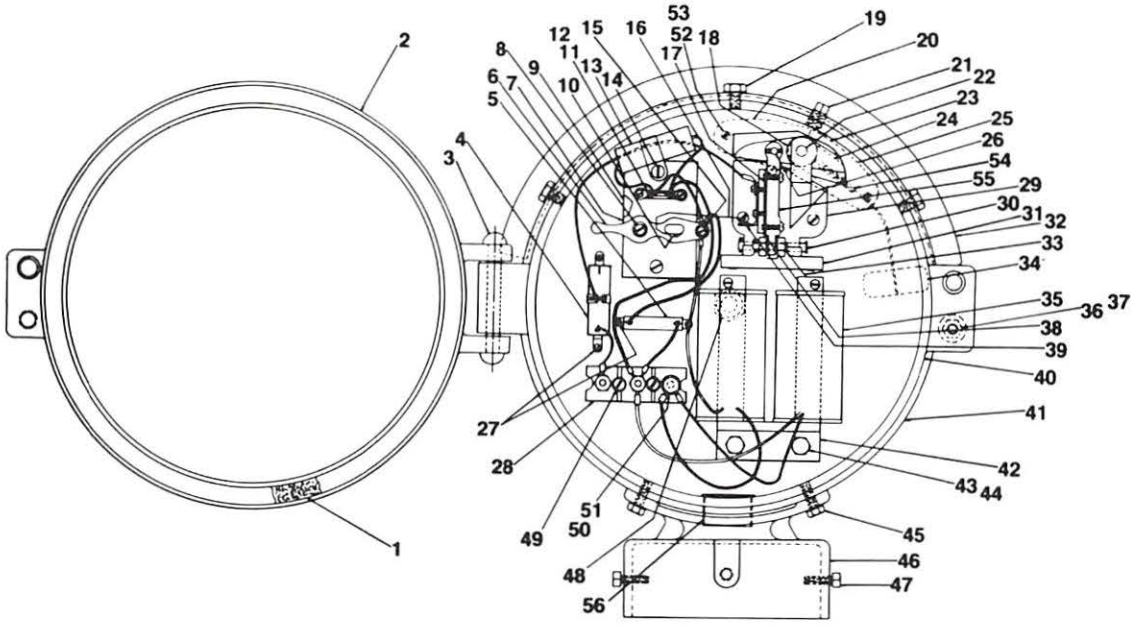

Ref. No.	Description	Piece No.	Qty.
1	Cover Packing Strip	1217-2	1
2	Cover	1219-2M	1
3	3/8" Dia. x 3 1/2" Lg. Rd. Hd. Rivet		1
4	Adjustable Resistor	1210-42	1
5	Fixed Resistance	1235-4	1
6	Contact Finger Support	1209-14	1
7	Contact Block	1210-11	1
8	1/4"-20x1/2" Lg. Rd. Hd. Mach. Scr. Stl. With Washer	10708	1
9	Insulator	1249-16CA	1
10	#8-32x1/4" Lg. Rd. Hd. Mach. Scr.		1
11	Terminal Strip	1101-115	1
12	#6-32x3/8" Lg. Rd. Mach. Scr. Cad. Plt.		2
13	Condenser	1101-114	1
14	1/4"-20x7/8" Lg. Fil. Hd. Mach. Scr.		5
15	#8-32x3/8" Lg. RHMS & #8 Flat Washer		1
16	Contact Finger (With Silver Contacts)	1222-10	
16A	Contact Finger (With Platinum Contacts)	1222-10B	
17	Insulation Strip	1210-10	1
18	Packing Ring	1248-16	1
19	5/16"-18x5/8" Lg. Hex Hd. Cap Scr. With 5/16 Flat Washer		3
20	Left Hand Dust Guard	1248-12	1
21	1/4" Steel Pipe Plug		1
22	Oscillator Stud	1209-8	
23	Right Hand Dust Guard	1248-11	1
24	Oscillator w/Bushing, Clevis Pin and Cotter Pin	1209-13	1
25	Gasket	1248-15	1
26	Operating Clevis Pin With Cotter Pin	1209-16	1
27	#6-32x1/4" Lg. RHMS		4
28	Terminal Strip	2508-103	1
29	Movement Base	1209-1	1
30	Armature Pin Complete With Cotter Pin	1209-17	1

Ref. No.	Description	Piece No.	Qty.
31	Armature	1209-2	1
32	Rain Shield	1208-CA	1
33	Operating Link Pin Complete With Cotter Pin	1209-15	1
34	Hammer Complete With Reinforcement Springs (Loud Tone)	1210-17	1
34A	Hammer Complete with Reinforcement Springs (Soft Tone)	1210-20	1
35	Coil Pair	1231-6-X	1
36	5/16"-18x1" Lg. Hex Hd. Cap Scr.		1
37	Push Nut	970-45	1
38	Link Insulator	1210-4	1
39	Moving Contact (Silver Contact)	1210-5	1
39A	Moving Contact (Platinum Contact)	1210-5B	1
40	Case	1220-2M	1
41	Gong	1211	1
42	Core Assy.	1249-6A	1
43	5/16"-18x1 1/4" Lg. Hex Hd. Cap Scr.		2
44	5/16" Lockwasher		2
45	5/16"-18x3/4" Lg. Hex Hed. Cap. Scr. With 5/16" Lockwasher		2
46	Socket for 3" I.D. Pipe	1206-3B-CA	1
46A	Socket for 3 1/2" I.D. Pipe	1206-2B-CA	1
46B	Socket for 4" I.D. Pipe	1206-4B-CA	1
46C	Socket for 5" I.D. Pipe	1206-5B-CA	1
46D	Socket for 6" I.D. Pipe	1206-6B-CA	1
47	Set Screw 5/16"-18x3/4" Lg. Cup Pt. Cad. Plt.		2
48	1/2"-13x7/8" Lg. Hex Hd. Cap. Scr. and 1/2" Lockwasher		1
49	1/4"-20x7/8" Lg. Fil. Hd. Cap. Scr.		2
50	Insulating Cap	R-2000-1	1
51	Insulating Sleeve	R-2000-2B	1
52	#8-32x1/4" Lg. RHMS Scr.		2
53	#8 Flat Washer		2
54	Oscillator and Hammer Assy.	1215-1	1
55	Movement Base Assy. Complete	1215	1
56	3/4" Chase Nipple		1

MODEL "0333" ARP WARNING BELL
ADDITIONAL PARTS FOR WALL OR POLE SIDE MOUNT

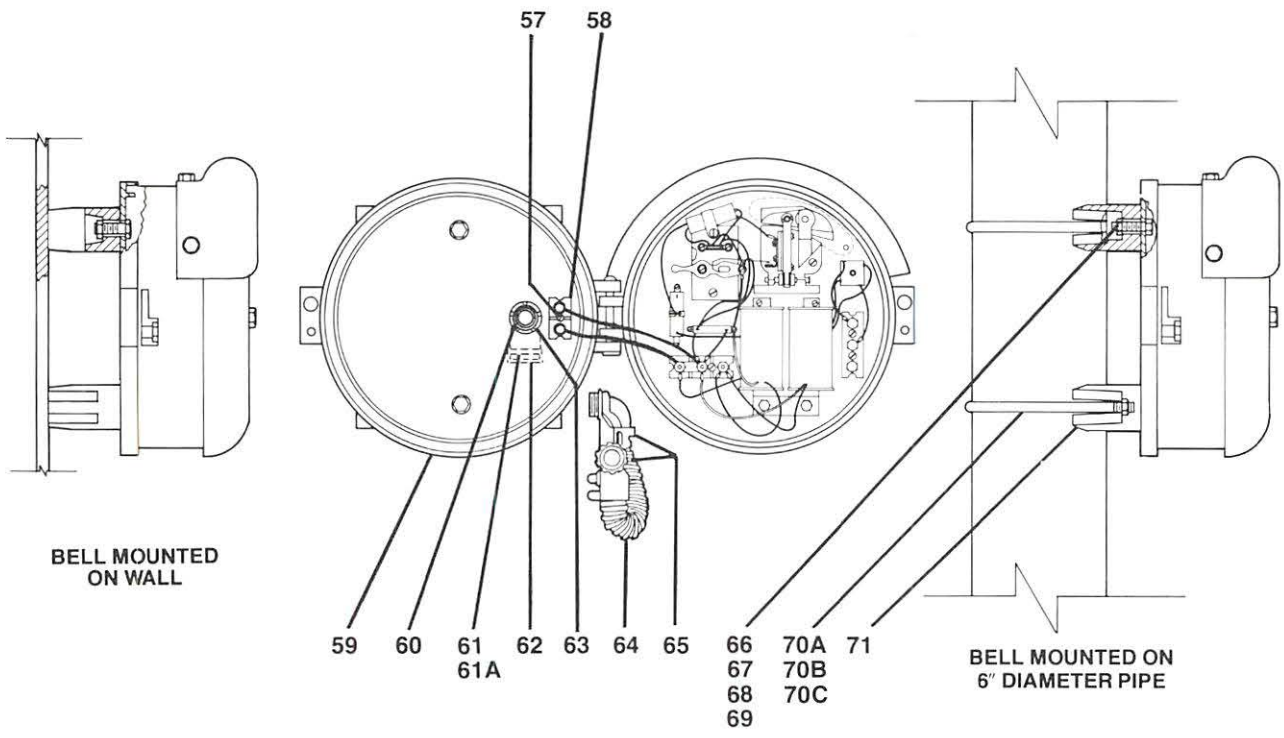

ADDITIONAL PARTS

ORDERING REFERENCES

Ref. No.	Description	Piece No.
57	1/4"-20 Slotted Screw, Fil. Hd. x 3/4" Lg. Cad. Plt.	
58	Terminal Block Assy	
59	Cover for Wall or Post Mount	1219-3M
60	Elbow Wire Outlet	
61	3/4" Street el	
61A	3/4" Pipe Nipple	
62	3/4" Chase Nipple	
63	3/4" Conduit Bushing	
64	3/4" Penflex Conduit x 18" Lg.	
65	3/4" 90° Squeeze Connector	
66	5/8"-11 Hex Hd. Bolt x 1 1/2" Lg. Cad. Plt.	
67	5/8"-11 Nut. Hex Hd. Cad. Plt.	
68	5/8" Flat Washer Cad. Plt.	
69	5/8" Lock Washer Cad. Plt.	
70A	U-Bolt 4" Pipe	3364-2-2X
70B	U-Bolt 5" Pipe	3364-5-5X
70C	U-Bolt 6" Pipe	3364-34-34X
71	Adapter Clamp	3364A1-1-1A

WESTERN-CULLEN-HAYES, Inc.
2700 West 36th Place • Chicago, Illinois 60632

Cast Aluminum, Lightweight, WESTERN-CULLEN-HAYES "Model 333-1" Special Application HIGHWAY CROSSING BELL.

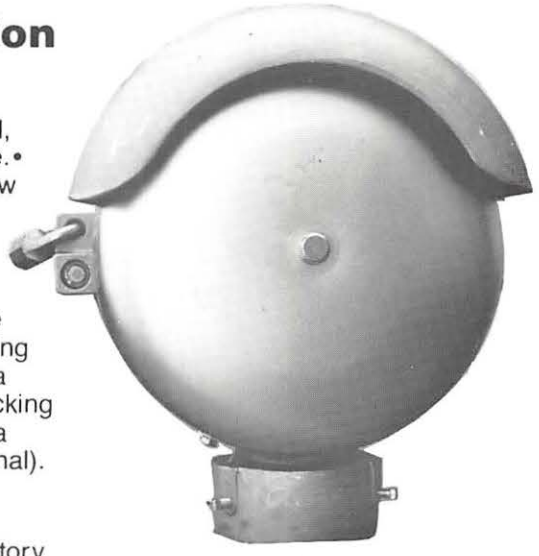

•Operates on low voltage AC or DC•Adaptable to any signal, can be mounted on the mast or wall.•Adjustable ringing rate.• Special locking feature...•Dustproof and weatherproof, a low maintenance product.

ABOUT THE "333-1" Bell

Western-Cullen-Hayes presents a special application highway crossing bell. Our model 333-1 features low voltage DC and/or low voltage AC operation with an adjustable ringing rate (average 200 strokes per minute), an arc supressor as a standard item, an improved sound intensity and a special locking feature which allows the bell cover to be secured with both a standard AAR hex nut wrench and a padlock (padlock optional). See photo.

Constructed of lightweight, rust-proof cast aluminum. The operating mechanism used in the Model 333-1 has been factory tested at 8,000,000 operations with only one oiling.

OPERATION

W-C-H's Model 333-1 functions from 9 to 17 VDC or 10 to 19 VAC and is provided with an adjustable resistor for proper current operation, (600 Ma) over the acceptable voltage range.

SPECIFICATIONS

Conforms to appropriate sections of A.A.R. Signal Specification 3.2.60, Highway Crossing Bell. Operational instructions and wiring schematic are included on the inside cover of every bell.

PHYSICAL DIMENSIONS OF BELL

Height 1'-3"
Width 1'-2"
Depth 7"
Weight: Complete Bell approx. 27 lbs.

HOW TO ORDER

Ref. No.	Description	Piece No.
A	Model 0333-1 Bell, for top of post or pipe mounting. Operates on 9 to 16 VDC and/or 10 to 19 VAC.	
	For 4" ID pipe, 4½" OD pole	0333CR-1
	For 5" ID pipe, 5⅝" OD pole	0333FR-1
	For 6" ID pipe, 6¾" OD pole	0333HR-1
B	Model 0333-1 Bell, for wall or side-of-pole mounting. Operates on 9 to 16 VDC and/or 10 to 19 VAC.	
	For wall mounting only	0333ARP-1
	For wall or side of 4½" OD pole mounting	0333ARP-1-4
	For wall or side of 5⅝" OD pole mounting	0333ARP-1-5
	For wall or side of 6¾" OD pole mounting	0333ARP-1-6

HIGHWAY CROSSING BELL MODEL "333-1"
REPLACEMENT PARTS

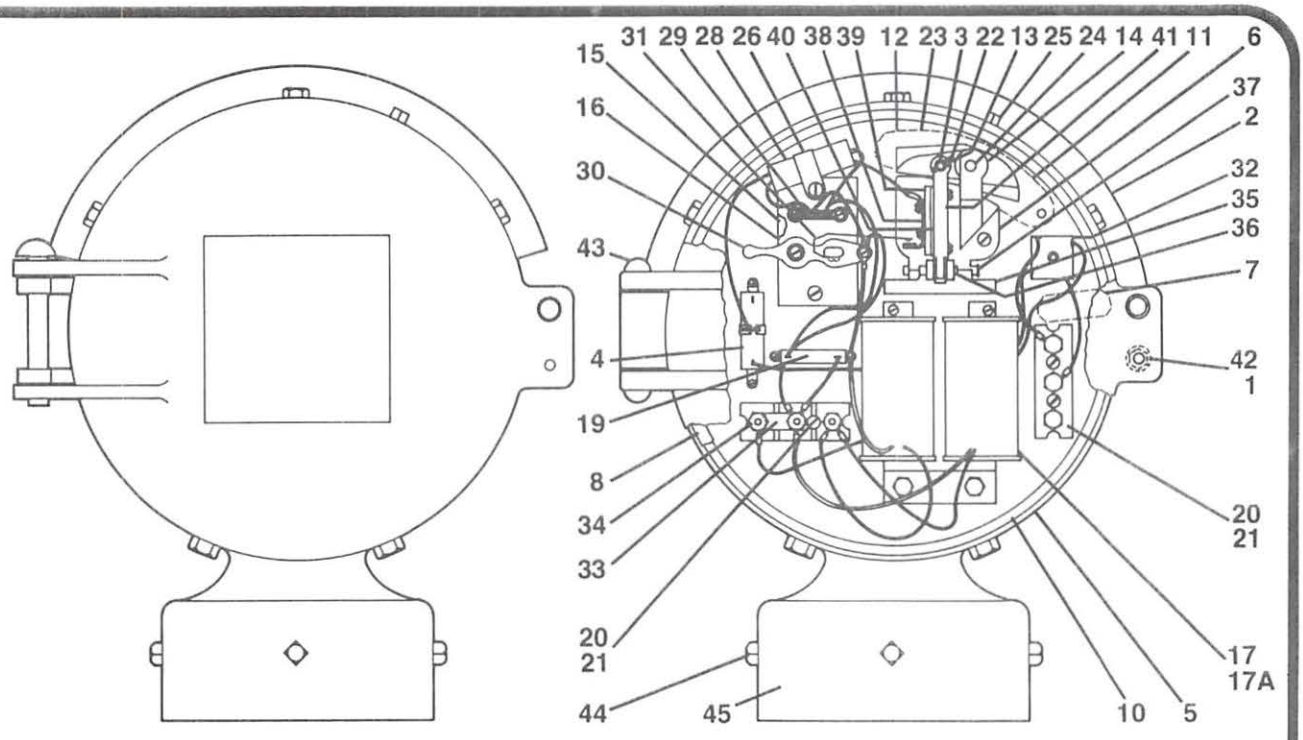

Ref No.	Description	Piece No.
1	Push Nut	970-45
2	Rain Shield	1208-CA
3	Op. Clevis Pin w/Cotter Pin	1209-16
4	Adjustable Resistor Assy	1210-42-1
5	Gong	1211
6	Movement Base	1209-1
7	Hammer Complete w/Reinf. Sps.	1210-17
8	Packing	1217-2
9	Cover, for Top of Pipe/Pole Mt.	1219-2-M
9A	Cover, for Wall/Side of Pole Mt.	1219-3-M
10	Case	1220-2-M
11	Left Hand Dust Guard	1248-11
12	Right Hand Dust Guard	1248-12
13	Gasket	1248-15
14	Packing Ring	1248-16
15	Insulator	1249-16-CA
16	Contact Block	1210-11
17	Coil & Core Assy	1249-30
17A	Coil Only (2 Req'd.)	1231-6A-5
19	Fixed Resistance	1235-4
20	Terminal Strip	2508-69-3
21	Hardware Kit	2508-203
22	Washer	10708
23	Oscillator & Bushing	1209-11

Ref No.	Description	Piece No.
24	Oscillator Stud	1209-8
25	Std. Pipe Plug	¼
26	Clamp	1953-30
28	Condenser	1101-114
29	Terminal Strip	1101-115
30	Contact Finger Support	1209-14
31	Contact Finger	1222-10
32	Rectifier S/A	1210-46
33	Test Terminal	38-0045-46
34	Test Nut	38-0045-290
35	Armature Assy	1209-2
36	Op. Link Pin w/Cotter Pin	1209-15
37	Armature Pin w/Cotter Pin	1209-17
38	Moving Contact	1210-5
39	Link Insulator	1210-4
40	Link Insulation	1210-10
41	Operating Link	1209-4
42	Hex HD Cap Screw	5/16-18 x 1
43	RD HD Rivet	3/8 x 3½
44	Set Screw, Cad Plt.	5/16-18 x ¾
45	Socket for 4" I.D. Pipe	1206-4B-CA
45A	Socket for 5" I.D. Pipe	1206-5B-CA
45B	Socket for 6" I.D. Pipe	1206-6B-CA

WESTERN-CULLEN-HAYES, Inc.
2700 West 36th Place • Chicago, Illinois 60632

WESTERN-CULLEN-HAYES
"Model 0666" WARNING BELL

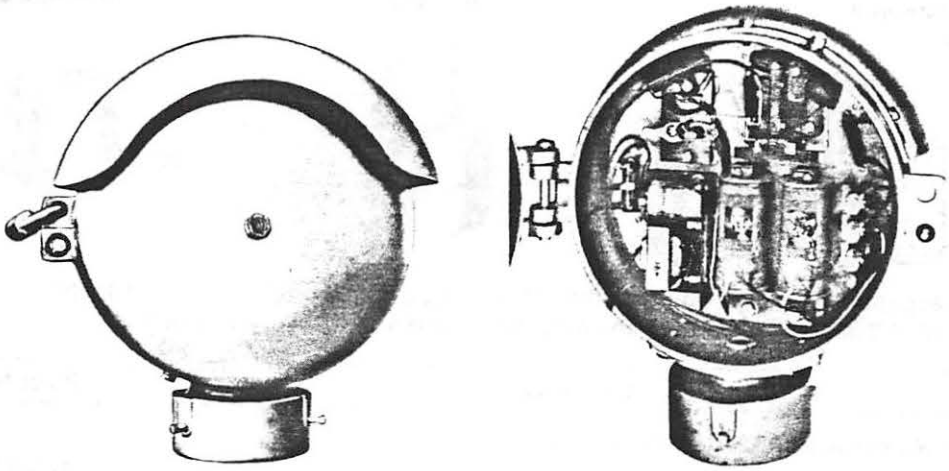

A loud tone warning bell that has been designed and built for heavy-duty industrial applications.

- Operates on 120VAC
- Adaptable—can be signal mast, pipe or wall-mounted
- Adjustable ringing rate (200 strokes per minute average)
- Loud tone—Approx. 90 dbA @ 10 feet
- Extra-long service life product

PERFORMANCE

The Model 0666 Bell features a mechanism design proven thru years of service as a railroad crossing warning bell. Factory tests of this mechanism indicate it will perform over 8,000,000 operations with only one oiling.

SPECIFICATIONS

Conforms to applicable sections of A.A.R. Signal Specification 3.2.60, Highway Crossing Bell. Operating instructions and wiring schematic are included on the inside cover of every bell.

Voltage—105-125 VAC
Audio Output—Approx. 90 dbA @ 10 feet
Power—1.2 Amp max
Dimensions—1'3" H x 1'2" W x 7" D
Weight—Approx. 27 pounds

HOW TO ORDER

Ref. No.	Description	Piece No.
A	Model 0666 Bell, for top of post or pipe mounting	
	For 4" ID pipe, 4½" OD pole	**0666CR**
	For 5" ID pipe, 5⅝" OD pole	**0666FR**
	For 6" ID pipe, 6¾" OD pole	**0666HR**
B	Model 0666 Bell, for wall or side-of-pole mounting	
	For wall mounting only	**0666ARP**
	For wall or side of 4½" OD pole mounting	**0666ARP-4**
	For wall or side of 5⅝" OD pole mounting	**0666ARP-5**
	For wall or side of 6¾" OD pole mounting	**0666ARP-6**

MOUNTING ACCESSORIES
For CR Version

Reference A

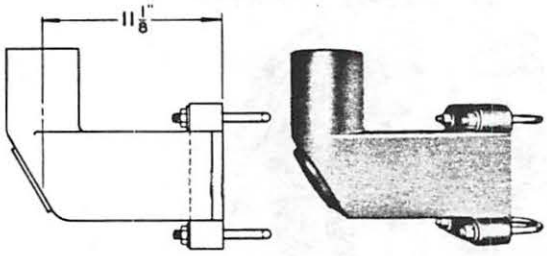

Reference B

Reference C

Special accessories are available for the Model 0666CR version (for top of 4" ID pipe mounting) of this bell. They permit the mounting of the bell in a variety of locations.

Ref. No.	Description	Piece No.
A	Gooseneck Bracket for mounting to:	
	3" ID pipe	**873-27B**
	3½" ID pipe	**873-28B**
	4" ID pipe	**873-29B**
	5" ID pipe	**873-30B**
	6" ID pipe	**873-31B**
	8" ID pipe	**873-32B**
B	Reducer 5" to 4" ID pipe	**990-63**
C	Flat Surface Mounting Adapter	**216-2**

MOUNTING APPLICATIONS
For ARP Version

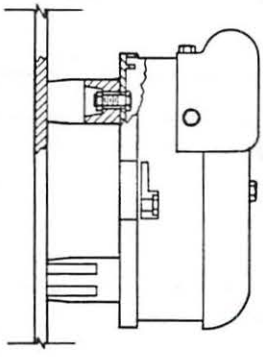

BELL MOUNTED ON WALL

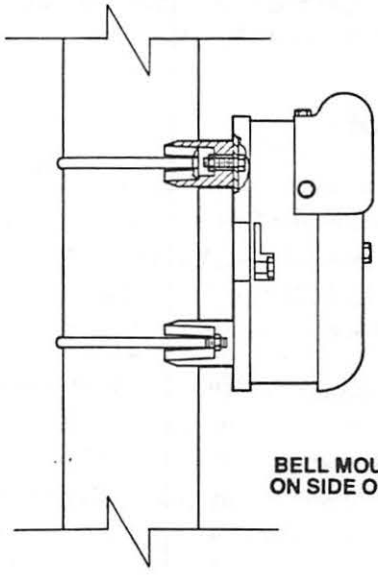

BELL MOUNTED ON SIDE OF PIPE

HIGHWAY CROSSING BELL MODEL "0666" CR, FR, HR
REPLACEMENT PARTS

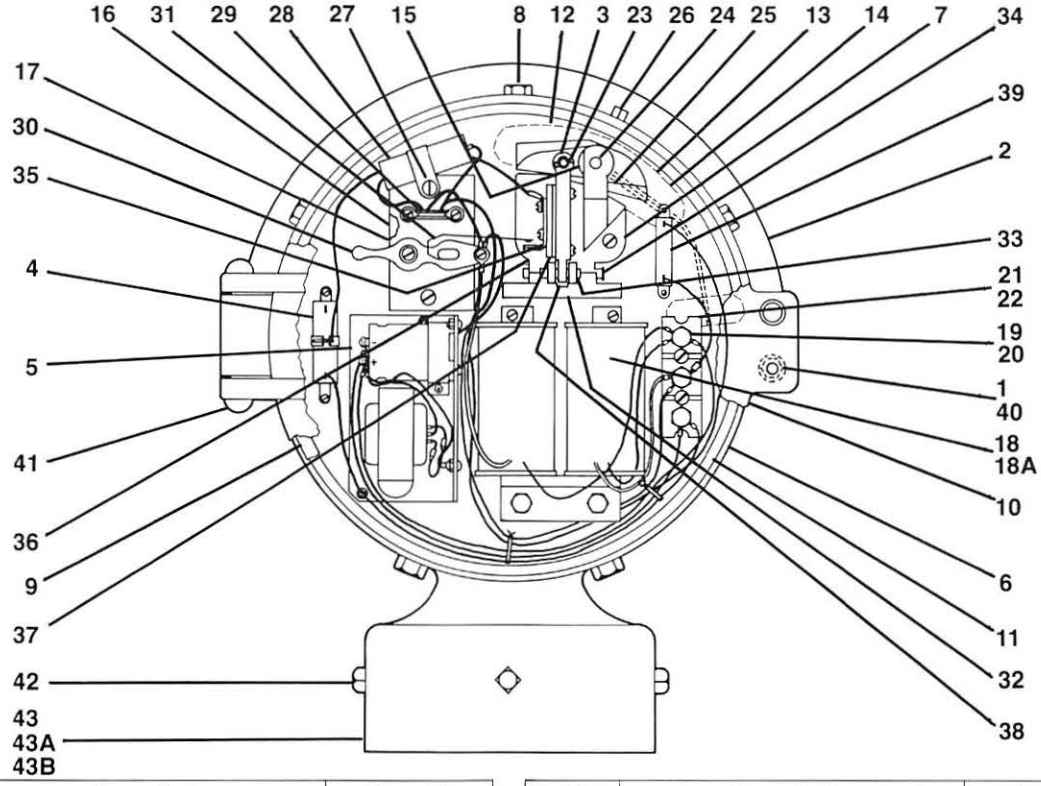

Ref. No.	Description	Piece No.
1	Push Nut	970-45
2	Rain Shield	1208-CA
3	Op. Clevis Pin w/Cotter Pin	1209-16
4	Adjustable Resistor Assy	1210-12
5	Transformer Rectifier Assy	1210-14
6	Gong	1211
7	Movement Base	1209-1
8	Hammer Comp. w/Reinf. Sp.	1210-17
9	Packing	1217-2
10	Cover, for Top of Pipe/Pole Mt.	1219-2-M
11	Case	1220-3
12	Left Hand Dust Guard	1248-11
13	Right Hand Dust Guard	1248-12
14	Gasket	1248-15
15	Packing Ring	1248-16
16	Insulator	1249-16-A
17	Contact Block	1210-11
18	Coil & Core Assy	1249-30
18A	Coil Only (2 Req'd.)	1231-6A-5
19	Insulating Cap	R-2000-1
20	Insulating Sleeve	R-2000-2-B
21	Terminal Strip	2508-69-3
22	Hardware Kit	2508-203

Ref. No.	Description	Piece No.
23	Washer	10708
24	Oscillator & Bushing	1209-11
25	Oscillator Stud Cotter Pin	1209-8
26	Std. Pipe Plug	¼
27	Clamp	1953-30
28	Condenser	1101-114
29	Terminal Strip	1101-115
30	Contact Finger Support	1209-14
31	Contact Finger	1209-10
32	Armature Assy	1209-2
33	Op. Link Pin w/Cotter Pin	1209-15
34	Armature Pin w/Cotter Pin	1209-17
35	Moving Contact	1210-5
36	Link Insulator	1210-4
37	Link Insulation	1210-10
38	Operating Link	1209-4
39	Fixed Resistance	1235-4
40	Hex Head Cap Screw	5/16-18 x 1"
41	Round Head Rivet	3/8" x 3½"
42	Set Screw, Cad. Plt.	5/16-18 x ¾"
43	Socket for 4" ID Pipe	1206-4B-CA
43A	Socket for 5" ID Pipe	1206-5B-CA
43B	Socket for 6" ID Pipe	1206-6B-CA

WESTERN-CULLEN-HAYES, Inc.
2700 West 36th Place • Chicago, Illinois 60632

MODEL "0666" ARP WARNING BELL
ADDITIONAL PARTS FOR WALL OR POLE SIDE MOUNT

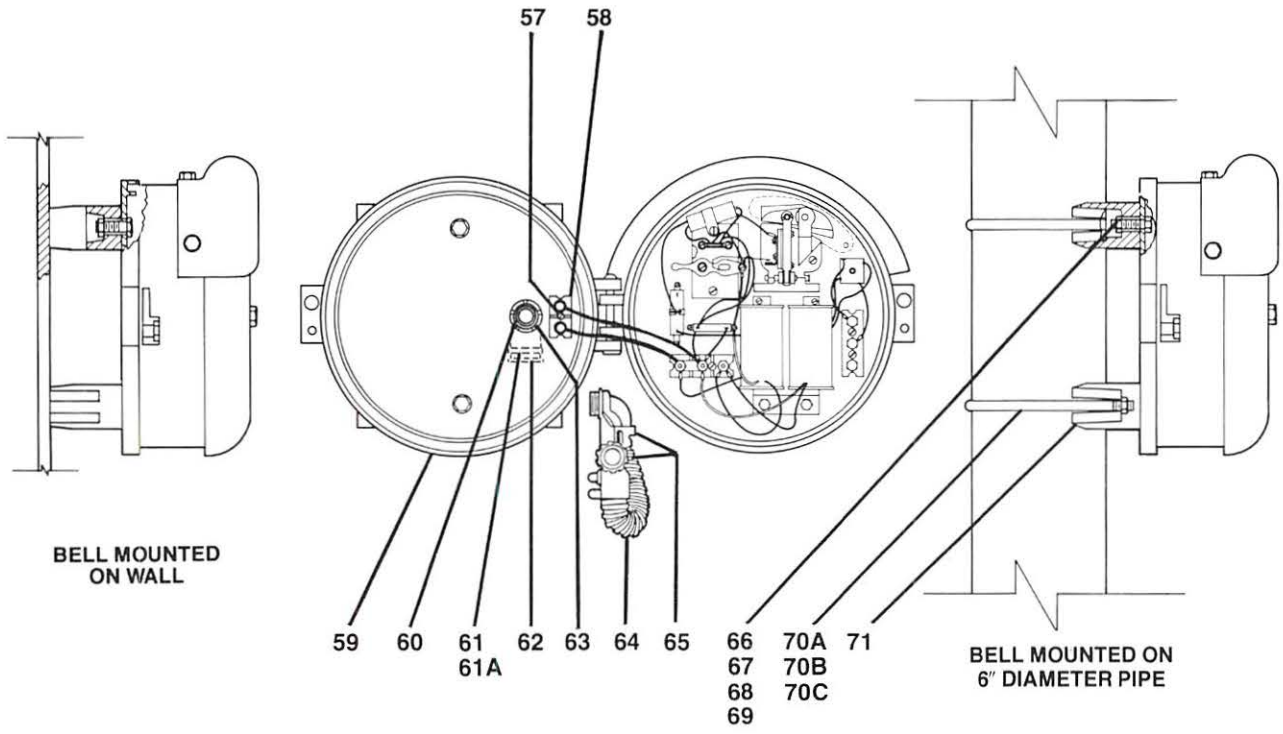

ADDITIONAL PARTS

ORDERING REFERENCES

Ref. No.	Description	Piece No.
57	¼"-20 Slotted Screw, Fil. Hd. x ¾" Lg. Cad. Plt.	
58	Terminal Block Assy	
59	Cover for Wall or Post Mount	1219-3M
60	Elbow Wire Outlet	
61	¾" Street el	
61A	¾" Pipe Nipple	
62	¾" Chase Nipple	
63	¾" Conduit Bushing	
64	¾" Penflex Conduit x 18" Lg.	
65	¾" 90° Squeeze Connector	
66	⅝"-11 Hex Hd. Bolt x 1½" Lg. Cad. Plt.	
67	⅝"-11 Nut. Hex Hd. Cad. Plt.	
68	⅝" Flat Washer Cad. Plt.	
69	⅝" Lock Washer Cad. Plt.	
70A	U-Bolt 4" Pipe	3364-2-2X
70B	U-Bolt 5" Pipe	3364-5-5X
70C	U-Bolt 6" Pipe	3364-34-34X
71	Adapter Clamp	3364A1-1-1A

WESTERN-CULLEN-HAYES, Inc.
2700 West 36th Place • Chicago, Illinois 60632

Type 555 Motor Driven Bell

For 6 to 600 Volts D.C. or 115 or 230 Volts A.C., 25 or 60 cycles

CAST ALUMINUM HOUSING

12" STEEL GONG

Approximately 112 Strokes Per Minute

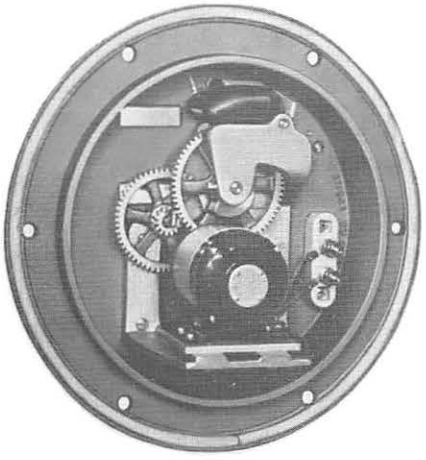

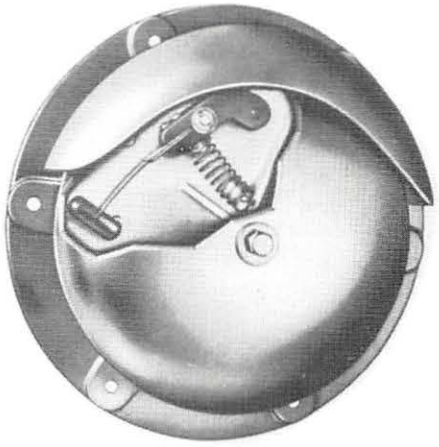

The Type 555 Gong Type Crossing Bell is of the same general appearance as the Type 222 Bell except that the hinged cover is enlarged to house the motor driven mechanism, consisting of a motor, two gears and a bell hammer. A cam mounted on one of the gear wheels engages and raises a weight to a certain point and then, due to gravity, allows it to drop. The bell hammer is connected to this operating weight by a shaft which causes the hammer to strike the gong a sharp heavy blow when the weight drops, giving a clear penetrating sound. The hammer blows are so timed that the sound waves of one blow are not broken up by subsequent waves.

This bell can be furnished for operation on any specified direct current voltage from 6 to 600; or for use on alternating current commercial lighting circuits of 115 or 230 volts, either 25 or 60 cycle, as specified.

Special versions of this bell have been developed for use on Diesel locomotives and on "Push-Pull" suburban passenger cars.

Ref. No.	Description	Piece No.
A	Type 555 Bell for mounting on top of 3½" I.D. pipe post. Specify D.C. voltage or A.C. voltage and frequency	0555B
A1	Same as Ref. A but for mounting on 4" I.D. pipe post	0555C
A2	Same as Ref. A but for mounting on 3" I.D. pipe post	0555D
A3	Same as Ref. A but for mounting on 5" I.D. pipe post	0555F
A4	Same as Ref. A but for mounting on 6" I.D. pipe post	0555H

Type 555C Bell can be mounted on the side of pole or flat surface by use of the Gooseneck Bracket, PN: 873

WESTERN-CULLEN-HAYES, Inc.
2700 West 36th Place • Chicago, Illinois 60632

TYPE 555ACN MOTOR DRIVEN BELL

FOR DIESEL LOCOMOTIVES AND PUSH-PULL PASSENGER CARS

74-Volts D.C. or 115-Volts, 60-Hz

- 112 STROKES PER MINUTE
- TWELVE INCH BELL STEEL GONG

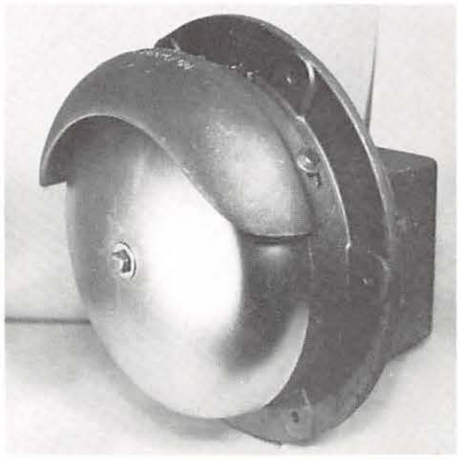

- CAST ALUMINUM HOUSING
- WITH EXTERIOR LUBRICATION POINTS

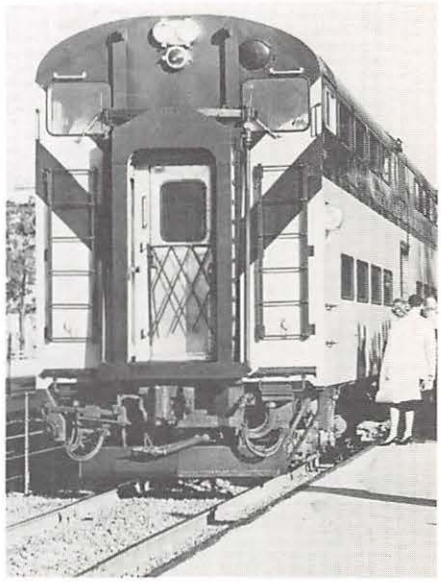

The Type 555ACN motor driven bell has an operating mechanism which consists of a motor, two gears and a bell hammer. Each hammer blow is distinct—so timed that the sound waves of the blow are not broken up by those of subsequent blows.

Operation. A cam, which is mounted on one of the gear wheels, engages and raises a weight to a certain point and then allows it to drop; this causes the bell hammer, which is connected to the operating weight by a shaft, to strike the gong, giving it a clear and penetrating sound.

WC Hayes

WESTERN-CULLEN-HAYES, Inc.

2700 West 36th Place • Chicago, Illinois 60632 •
Telephone: 312/254-9600 • Telex 25-3206

P A R T S L I S T

COVERING WESTERN TYPE 555-ACN WARNING BELL

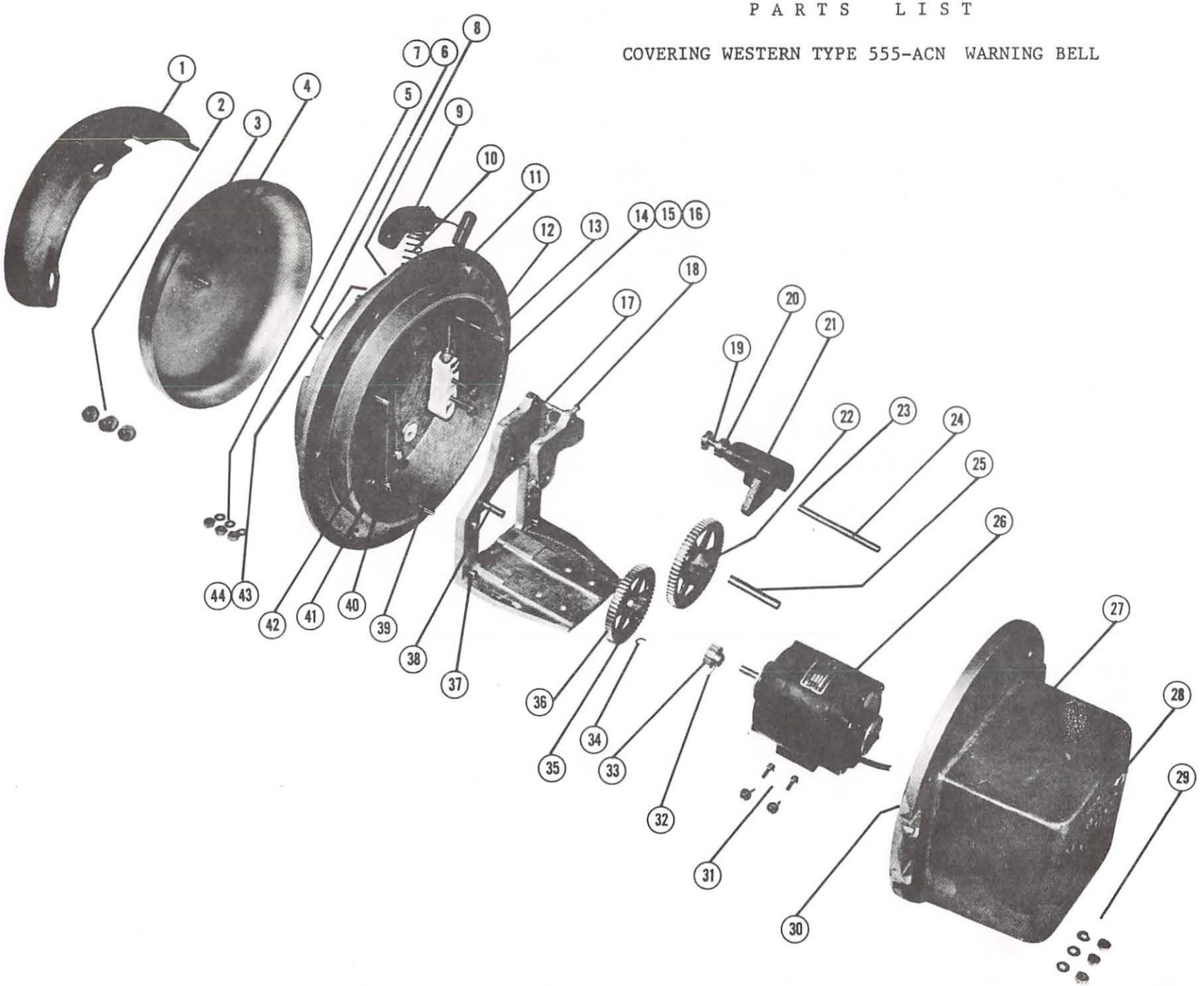

PARTS LIST
COVERING WESTERN TYPE 555-ACN WARNING BELL

FIGURE NUMBER	DESCRIPTION	QTY./ CAR	PART and DRAWING #	FIGURE NUMBER	DESCRIPTION	QTY./ CAR	PART and DRAWING #
1	Rainshield	1	1208 -CA	22	Drive Gear	1	1410-21
2	5/16-18x5/8 Lg. Hex. Hd. Cap Screw W. Lock Washer	3		23	1/16"x1/2" Lg. Cotter Pin (not exposed)	1	
3	Gong	1	1211	24	Operating Weight Pin	1	1508-46
4	1/2-13x7/8 Lg. Hex. Hd. Cap Screw W. Lock Washer	1		25	Drive Gear Shaft	1	1410-22
5 & 29	1/4-20 Hex Nut W. Lock Washer	12*		26	Motor Sub Ass'y. (Specify 74 or 115 V.)	1	0700-219S
6	Spring Rocker (not exposed)	1	1508-6	27	Cover	1	1507-EM
7	#10-32 x 1½" Lg. Rd. Hd. Machine Screw (not exposed)	1		28	1/2" Chase Nipple, Straight	1	
8	Case	1	1506-EM	30	Felt-Packing (Cemented in Cover) (not exposed)	2	1217-2
9	Hammer & Hammer Support	1	1508-20	31	10-32x3/4 Lg. Rd. Hd. Machine Screw/ Plain & Lock Washer	4	
10	Hammer Spring	1	1508-7	32	3/32 Dia. x 5/8" Lg. Pin	1	
11	Gasket - 3/8" Dia. Neoprene Cord	1		33	Pinion	1	1410-15B
12 & 37	1/4-20x7/8" Lg. Fil. Hd. Machine Screw	5		34	Snap Ring	1	254229
13	A.A.R. Terminal Block	1	1056-18 E	35	3/8" I.D.x1-1/16" O.D.x1/32 Th. Washer (not exposed)	1	1410-32
14	A.A.R. Binding Nut	4	10706	36	Intermediate Gear & Pinion	1	1410-16
15	A.A.R. Clamp Nut	4	10707	38	Intermediate Gear Stud	1	1508-141
16	A.A.R. Washer	8	10708	39	Stud	3	1508-35
17	Gear Frame	1	1411-3CA	40	L-Fitting With 10-32 Thread	1	15002-1
18	10-32x1/2 Lg. Socket Set Screw (Nyloc)	2		41	Hose Fitting W. #10-32 Thread	6	1508-47
19	Operating Weight Stud	1	1508-4	42	Vinyl Tubing (Length as Req'd.)	3	3814-4
20	Spacer - 5/16" I.D. Plain Washer	5		43	Oil Hole Cover (not exposed)	3	1508-44
21	Operating Weight	1	1508-45	44	Neoprene Gasket (not exposed)	9	11761

* Six ¼"-20 Hex Nuts w Lock Washers are not shown in above call outs

Rev. 2-15-82

INSTALLATION APPLICATIONS ON THE
W-C MOTOR DRIVEN BELL

- Types 555ACN-115 and 555ACN-74 are both flanged units for mounting on the bulkhead of the car or engine. In such mounting the bell is located on the outside and the mechanism is inside the vehicle.
- Type 555ACN-74C has a cover which encloses the mechanism, allowing it to be mounted on the exterior of the vehicle.
- Type 555ACN-74 and 555ACN-74-C are for operation on 74-V., Diesel engine starting battery.
- Type 555ACN-115 has an A.C. motor for use on 115-V., 60-Hz car lighting circuit.

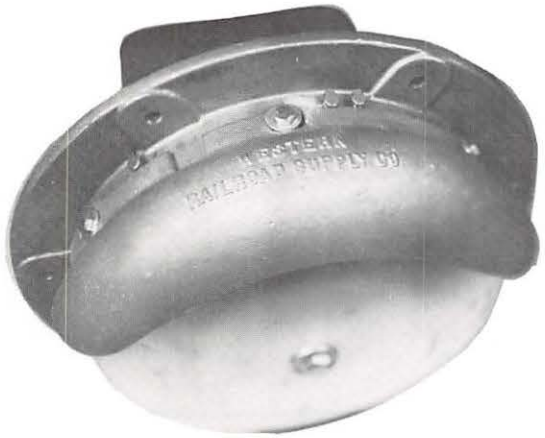

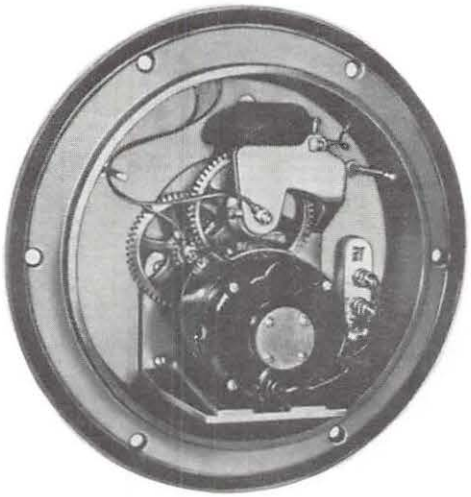

PERIODIC MAINTENANCE

Three exterior oil vents, located at the top of the bell, are for lubricating bearing surfaces. Each unit has been lubricated at the factory preceding shipment with SAE 20 non-detergent oil. Such procedure should be followed every month. On gear faces use NO. 201 Open Gear Lubricant, Western-Cullen's No. 1509-43.

GUARANTEE

Western-Cullen Type 555ACN Motor Driven Locomotive Bells are guaranteed for one year from date of shipment against defects in material and workmanship. In order that this warranty be effective, maintenance of the unit must have been adhered to in compliance with the recommended program of lubrication of the unit. Should the bell appear to be defective, it should be returned to use prepaid for inspection. Please enclose a letter explaining the failure. If found to be defective, repair or replacement will be made at no charge, F.O.B., Chicago. This guarantee does not include damage caused by overloading, misuse or accident.

ORDERING REFERENCE

Description:	Piece No.
Type 555ACN-74C Motor Driven Bell, Fully enclosed, 74-V DC	0555ACN;74C
Type 555ACN Motor Driven Bell, bulk-head mounting, 115-V, 60-Hz	0555ACN-115
Type 555ACN Motor Driven Bell, bulk-head mounting, 74-V, DC	0555ACN-74

Specification Guide for ordering Hayes Derails

(Sliding: HB Series - Hinge: EB Series - Portable Model)

The correct derail size is determined by the vertical distance in even inches from the top of the rail to the surface on which the derail is secured. If tie plates are used add the thickness of the plate under the rail to the height of the rail to determine the correct derail size. Adjustments to make the vertical distance correspond in even inches to the derail size should be made by adzing the ties either under the derail or under the rail. Any Hayes Derail may be used on rail 1/2" lower to 1/2" higher than the rail to which its size number refers, but the distance from the top of the rail to the surface on which the derail is secured must be even inches and must correspond to the size number of the derail.

For these sections, order Size 4

Type	Weight	Height
ASCE	60 lb.	4-1/4"
ASCE	65 lb.	4-7/16"
A R A - A	60 lb.	4-1/2"

For these sections, order Size 5

Type	Weight	Height
ASCE	70 lb.	4-5/8"
C & NW	72 lb.	4-3/4"
A R A - A	70 lb.	4-3/4"
Mo Pac	75 lb.	4-3/4"
ASCE	75 lb.	4-13/16"
U Pac	75 lb.	4-15/16"
A R A - B	80 lb.	4-15/16"
ASCE	80 lb.	5"
Interb'gh	90 lb.	5"
A R A - A	80 lb.	5-1/8"
Can Pac	85 lb.	5-1/8"
C B & Q	85 lb.	5-3/16"
ASCE	85 lb.	5-3/16"
Mo Pac	85 lb.	5-7/32"
D & R G	85 lb.	5-1/4"
A R A - B	90 lb.	5-17/64"
Soo Line	85 lb.	5-3/8"
Grt Nor.	90 lb.	5-3/8"
ASCE	90 lb.	5-3/8"
D L & W	101 lb.	5-7/16"
D & R G	90 lb.	5-1/2"
Dudley	90 lb.	5-1/2"
Pa	100 lb.	5-1/2"

For these sections, order Size 6

Type	Weight	Height
D & R G	90 lb.	5-1/2"
Dudley	90 lb.	5-1/2"
Pa	100 lb.	5-1/2"
C & N W	90 lb.	5-17/32"
A R A - A	90 lb.	5-5/8"
A T & S Fe	90 lb.	5-5/8"
P & R	100 lb.	5-5/8"
A R A - B	100 lb.	5-41/64"
Pa	100 lb.	5-11/16"
C & N W	100 lb.	5-45/64"
U Pac	90 lb.	5-3/4"
Interb'gh	100 lb.	5-3/4"

(Size 6, contd)

Type	Weight	Height
Grt Nor	100 lb.	5-3/4"
ASCE	100 lb.	5-3/4"
Head Free-R A	90 lb.	5-25/32"
A R A - A	100 lb.	6"
AREA	100 lb.	6"
D L & W	105 lb.	6"
Lehigh Val	110 lb.	6"
Dudley	105 lb.	6"
N Y, N H & H	100 lb.	6"
Head Free - R E	100 lb.	6-1/16"
NY, N H & H	107 lb.	6-1/8"
Head Free R E	100 lb.	6-5/32"
AREA	110 lb.	6-1/4"
Grt Nor.	110 lb.	6-1/2"
Dudley	115 lb.	6-1/2"

For these sections, order Size 7

Type	Weight	Height
Grt Nor.	110 lb.	6-1/2"
Dudley	115 lb.	6-1/2"
AREA	112 lb.	6-5/8"
AREA	115 lb.	6-5/8"
Pa	130 lb.	6-5/8"
Head Free - R E	112 lb.	6-3/4"
T R	112 lb.	6-3/4"
AREA	130 lb.	6-3/4"
Head Free - S.P.	113 lb.	6-13/16"
Head Free - P.S.	130 lb.	6-13/16"
Lehigh Val	136 lb.	7"
AREA	133 lb.	7-1/16"
AREA	131 lb.	7-1/8"
Head Free - R E	131 lb.	7-1/4"
AREA	132 lb.	7-1/8"
Head Free - S P	132 lb.	7-5/16"
T R	129 lb.	7-5/16"
AREA	140 lb.	7-5/16"

For these sections, order Size 8

Type	Weight	Height
Pa	152 lb.	8"
Pa	155 lb.	8"

NOTE: All sizes of any Model of Hayes Derail are sold at the same price

WC Hayes
WESTERN-CULLEN-HAYES, Inc.
120 North 3rd Street • P.O. Box 756 • Richmond, Indiana 47374 • Telephone: 317/962-0526

FOLLOW THESE STEPS WHEN INSTALLING A HAYES DERAIL

1) Be sure that the derail ties are:
   A) Sound and solid, to hold derail firmly in place
   B) At right angles to the rail
   C) Spaced to bear against the vertical under-flanges of Derail.

2) Determine height of rail from table (over) or by measuring.
   A) If tie-plates are used, add their thickness to height of rail. Distance from TOP OF RAIL to TOP OF TIE is the VERTICAL DISTANCE with which you must work.

3) Size of Derail (from nameplate) is in even inches, and is VERTICAL DISTANCE which this derail will exactly fit.

EXAMPLE: You have a Size 6 Derail (from nameplate). VERTICAL DISTANCE (Step 2 above) 6-1/2". (5-3/4" high rail on a 3/4" tieplate). Derail, sitting on ties, will be 1/2" too LOW. You may either: A) Shim up the derail 1/2' with steel shims, or B) Remove the tie-plates from under the rail and adz the ties 1/4" under the Derail. Either method will make the distance from TOP OF RAIL to TOP OF TIE (where the derail sits) the same number of inches as size number of Derail. THIS IS A "MUST".

EXAMPLE: You have a Size 6 Derail (from nameplate). VERTICAL DISTANCE (Step 2 above) is 5-1/2". (5-1/2" high rail directly on ties -- no tie-plates). Derail, sitting on ties, will be 1/2" too HIGH. You may either: A) Shim up the running rail 1/2" with steel shim, or B) Adz the ties 1/2" under the Derail. Either method will make the distance from TOP OF RAIL to TOP OF TIE (where the Derail sits) same number of inches as size number of Derail. THIS IS A "MUST".

4) Set Derail in place with under-flanges tight between spaced ties.
   A) If Sliding Type (HB Series) have derailing block in retracted position and SHOVE DERAIL TIGHTLY AGAINST WEB OF RAIL.
   B) If Hinge Type (EB Series) have derailing block in on-track position (ready to derail) and position derail so that DERAILING BLOCK COMES COMPLETELY DOWN ON RAIL-HEAD - AND VERTICAL SURFACE UNDER BLOCK JUST TOUCHES GAUGE EDGE OF RUNNING RAIL.

5) Use all holes and secure Derail to ties with spikes or lag screws.

6) Tamp ties thoroughly. Get a good bearing under the running rail.

7) Operate Derail a number of times to be sure it moves on and off rail smoothly, covers ball of rail, and lies flat on top of rail all along under derailing surface. Derail is now ready for use.

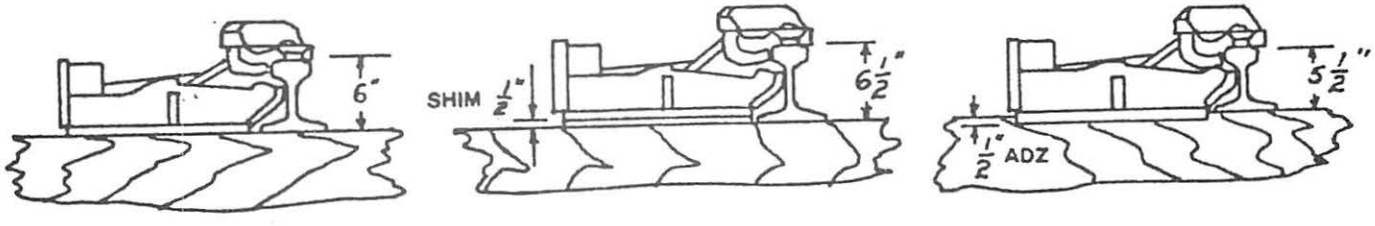

(Above) Model HB Size 6 Hayes Derail on various rail heights.

MODEL HB & HBP SLIDING DERAILS

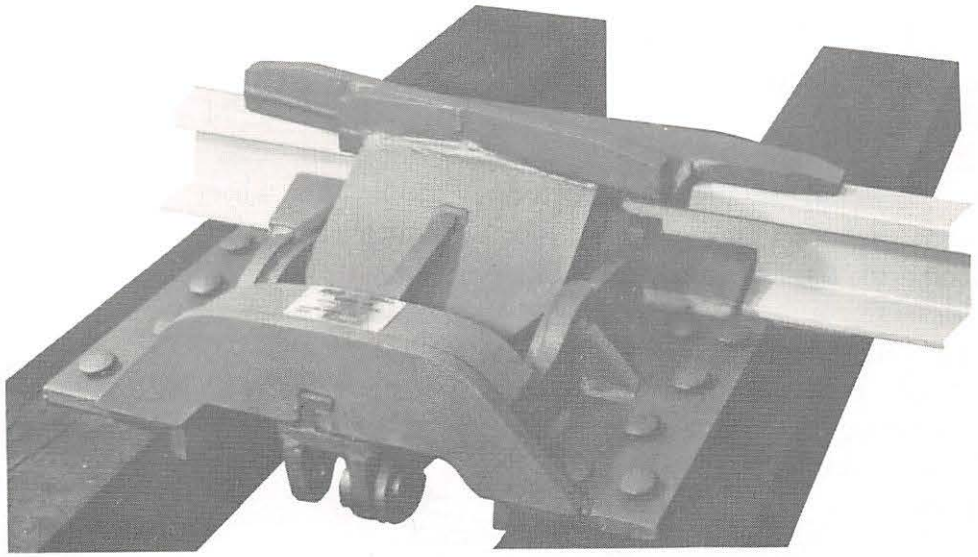

Model	Sizes	Made	Lugs	Weight
HB	4, 5, 6, 7, 8	in right and in left	2 for usual use	266 lbs.
HBP	4, 5, 6, 7, 8	in right and in left	3 for interlocking	277 lbs.

With diesels and other heavy equipment the utmost is needed in protection of the main track. Derails made for the needs of a past generation are inadequate today.

The Model HB Derails are 15% longer, 90% heavier, 20% easier to operate and in derailing put only half as much stress on the derail and on the wheels as any previous Hayes Derail.

Ordering: Specify the model, size and right or left. All sizes of any model and either right or left are sold at the same price.

Size: The size number of a Hayes Derail is the vertical distance in even inches below the top of the rail to the surface on which the derail guide box must be secured. Any Hayes Derail may be used on rail higher or lower than the size number of the derail. But in every case the surface on which the guide box is secured must be exactly the even inches of the derail size number below the top of the rail. With a size 6 derail the surface under the guide box must be exactly 6 inches below the top of the rail; and so with sizes 4, 5, 7 and 8. The derails will operate perfectly if installed as above or as fully detailed in the installation circular.

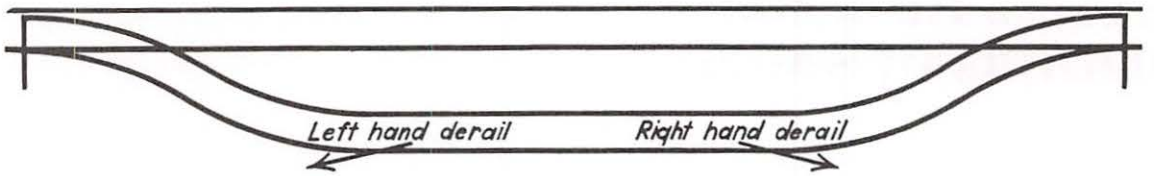

Right and Left: Looking in the direction of movement of a car to be derailed a right hand derail goes on the right hand rail and derails toward the right. Conversely with the left.

Curves: A derail should not be put any place where the wheels have a tendency to bind against the opposite rail. On a curved track put the derail on the outside rail of the curve, ordering a right or left accordingly.

Installation: A circular giving full information for installing is furnished for each size of derail.

Stroke: The stroke of Model HB is 6¼ inches; this takes care of the wider derail shoe.

Length of derail shoe: The derail shoe has a length of 30 inches and the design is such that the wheel is not derailed until it reaches nearly the end of the shoe. This provides an easy derailing angle and pulls the wheel off the opposite rail much less abruptly than in previous designs.

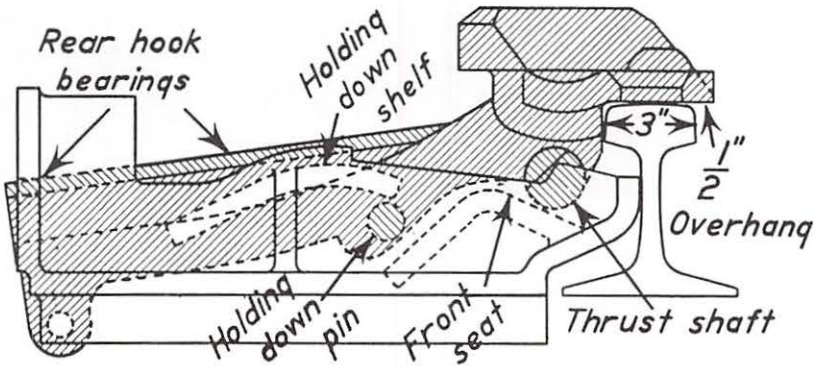

Showing ½" overhang of shoe beyond rail head

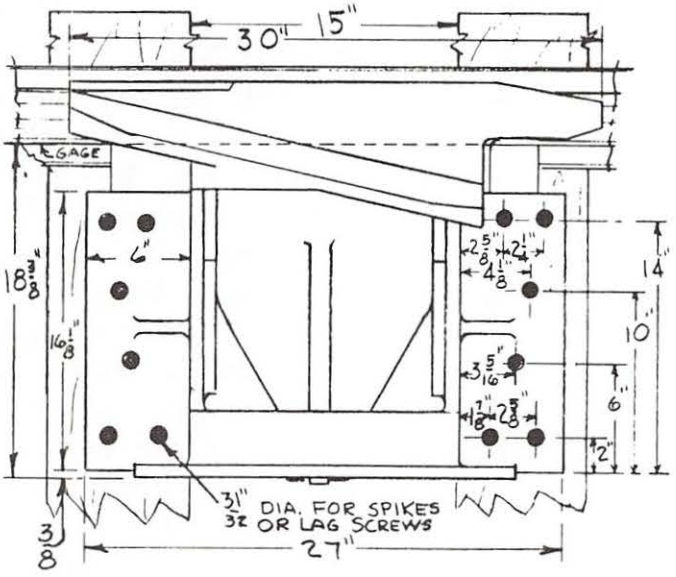

Plan showing attaching holes and length of derail shoe

Experience with thousands in track proves that HB can be relied on to put the heaviest equipment including diesels on the ground. An HB Derail should be used at every turnout from the main track to protect the main track.

Let us send you circulars in regard to ordering bumping posts, cushion wheel stops and other track material.

WESTERN-CULLEN-HAYES, INC.

HAYES PLANT, 120 NORTH 3rd STREET, P.O. BOX 756
RICHMOND, INDIANA 47374 — (317) 962-0526

DERAIL OPERATOR SYSTEM

For Railroad Signal Applications

- Use with clearance point derails at turnouts entering main line
- Replace difficult-to-maintain piping at pipe-connected derails
- Blue Flag protection at car and locomotive repair/service facilities

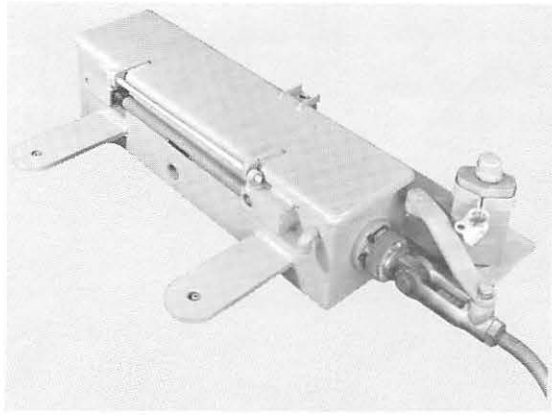

Model 409 DeLectric Derail Operator

SPECIAL FEATURES

Model 409 DeLectric Derail Operator

- 20-24 VDC Operation
- Self-restoring overload protection
- Lockable cover for Emergency Throw Lever Socket
- Power disconnect indicator circuit—for safe use of Emergency Throw Lever and power-off indication for signal system
- Knife switch power disconnect

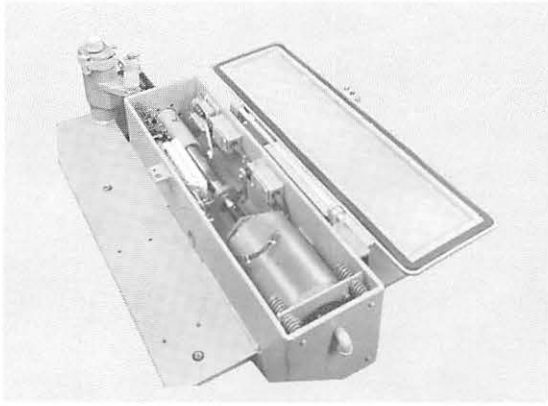

Model 100 Circuit Controller

- Four normal/reverse contacts, positively driven
- Two position indications—"open" and "closed"
- Individually adjustable cams
- Contact response satisfies AAR requirements

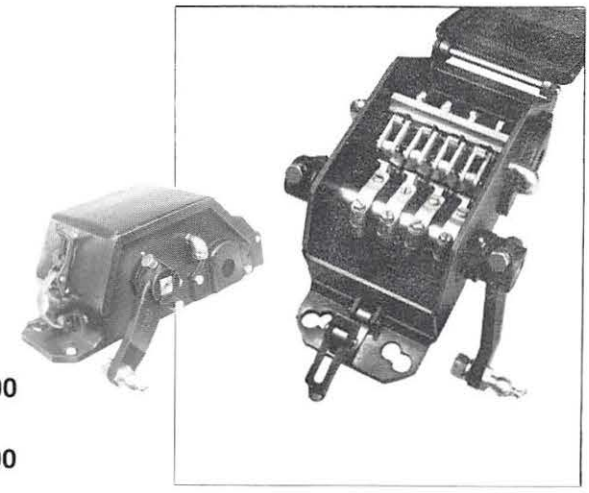

Model 100 Circuit Controller

ORDERING REFERENCES

Model 409 DeLectric Derail Operator w/Derail Operating Rod	**409-00-00**
Model 100 Circuit Controller w/Crank (5⅜" lg, ¾" offset)	**38-0100-100**
Derail Connecting Rod w/Ball Socket & Clevis	**38-0100-200**

WESTERN-CULLEN-HAYES, Inc.
2700 West 36th Place • Chicago, Illinois 60632

Printed in USA MP2M

Protect People, Plant and Equipment Automatically... with a DeLectric® OPERATOR and an HB or KA Series DERAIL

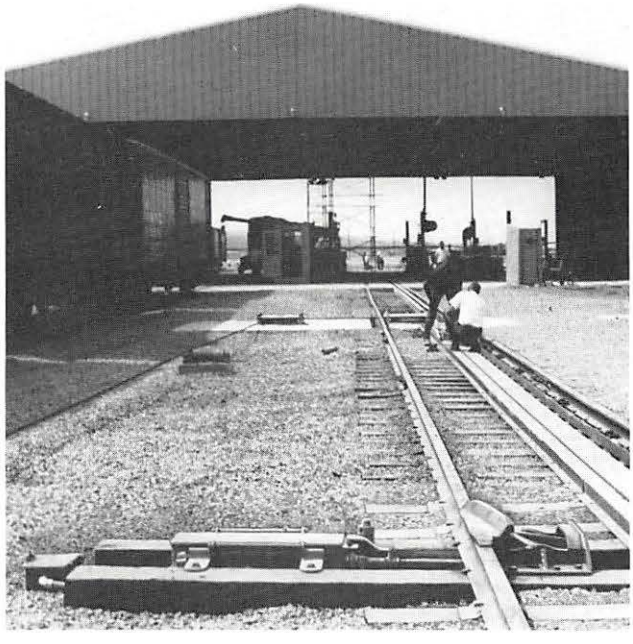

- **Improve Safety**
- **Reduce On-Going Costs Of Blue Flag/OSHA Law Compliance**
- **Reduce Potential For Damage To Overhead Doors**
- **Improve Switching Crew Efficiency: 1½ second throw speed**
- **New, Model KA Derail — allows use with center-of-track-mounted car pullers**
- **Supplied In Three Models, For AC And DC Operation**

The W-C-H DeLectric Operator with Model HB or KA Series Derails provides dependable automatic protection for personnel working in or on cars, on plant spur tracks or in areas such as loading docks, repair tracks and shops. The unique device offers excellent automatic plant door protection. It can be circuited so that closing the door sets the DeLectric protection in service, prohibiting moving rail cars from entering work or plant area. Opening the door can automatically remove the derail, permitting rail cars to enter the protected area. The DeLectric can be used to trigger a number of warning devices such as horns, sirens, lights and power blue flags.

Sturdy welded case is ⅜″ steel and has die-formed steel cover with wear-resistant gasketing. Rugged construction over-size motor and life-time lubrication assure long dependable service life and minimum maintenance.

WESTERN-CULLEN-HAYES, Inc.
2700 West 36th Place • Chicago, Illinois 60632
Telephone: 312/254-9600 • Telex 25-3206

WESTERN-CULLEN-HAYES, Inc.
120 North 3rd Street • P.O. Box 756 • Richmond, Indiana 47374
Telephone: 317/962-0526

DESCRIPTIVE DATA

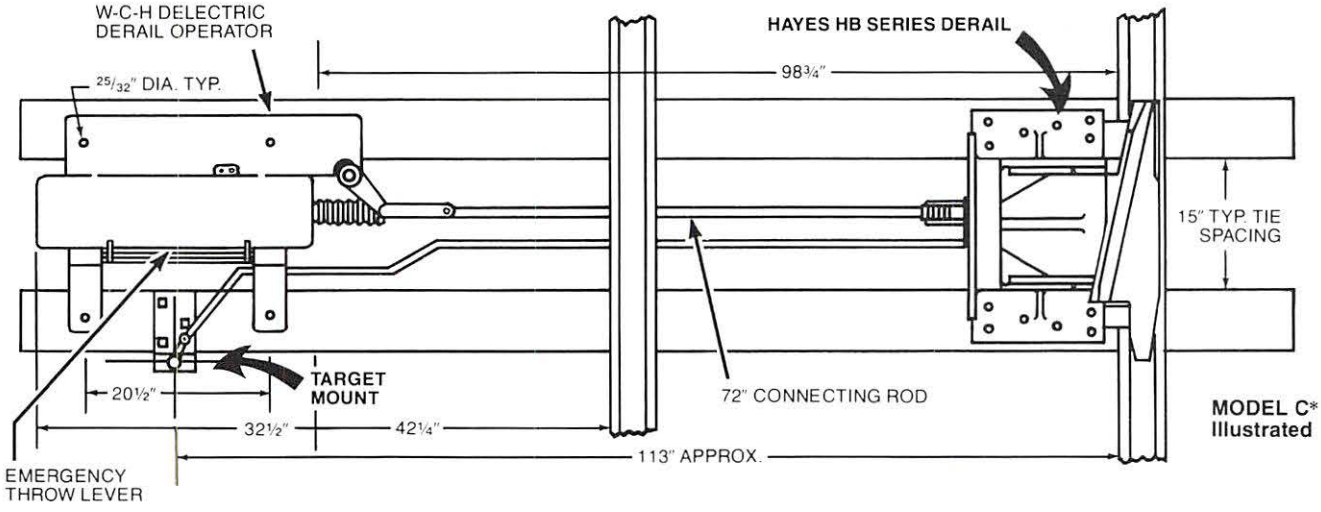

MODEL A—For 20VDC (nominal). Use with 20 volt battery.
Current: 17 amps., 340 watts.
PN: 403-00-01

MODEL B—For 3-phase AC. Specify 240 or 480 volts.
Current: 240 volts, 4 amp.—480 volts, 2 amp.
.960 KVA.
PN: On Application

***MODEL C**—For 1-phase AC. Specify 120 or 240 volts.
Current: 120 volts, 8 amp.—240 volts, 4 amp.
.960 KVA.
PN: 120 VAC, 401-00-01
PN: 240 VAC, 417-00-00

ALL MODELS
Weights:
Operating Unit Only ..... 250 lbs.
Local Controller ..... 19 lbs.
(6"x11"x7⅜")
Target Mount ..... 36 lbs.
(Incl. Conn. Rod)
Right-Angle Crank ..... 62 lbs.
(Incl. Rod)
Dimensions of Operating
Unit: 12"x24½"x38¼"
Target Mount—PN: 412-00-00. Specify Colors.
Rod for Above—PN: 412-05-00

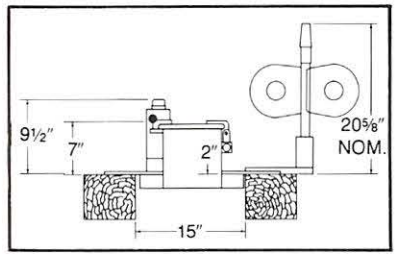

ACCESSORIES

SWITCH LAMPS

Poly-carbonate plastic type. Complete with single contact, bayonet base bulb socket and cable grip. Available in green, yellow, red, blue and white. Specify two colors. Consult with serving railroad before specifying. Fits standard lamp tip furnished with target mount.
Dimensions: 7½"x7½"x8"H.
Weight: 3 lbs. Part No.: 38-0080-4

Cast aluminum type. Complete with single contact bayonet base bulb socket and cable grip. Targets and lenses available in several color combinations. Consult with serving railroad before specifying. Fits standard lamp tip furnished with target mount.
Dimensions: 10⁷/₁₆"x10⁷/₁₆"x12⅜"H. Weight: 15 lbs.
Part No.: 1880 Series

LOCAL CONTROLLER OR "REQUEST TO PROCEED"

The unit bolts in place on the wide flange of the DeLectric. The enclosed heavy-duty contactor is connected to proper terminals through the access opening in the side of the DeLectric. Locks in either on-rail or off-rail position with standard switch padlock.
Part No.: 413-00-00

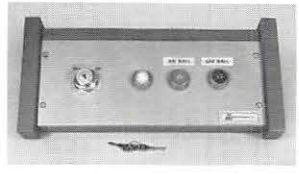

CONTROL CONSOLE

Single unit control.

Console equipped to control one DeLectric. Two position key-type switch provides security. Key can be removed in either position. Contact configuration two normally closed contact per position. Current capacity of contact is 60 AMPS make, 6 AMPS break, 10 AMPS continuous, at 120 VAC. Complete with "Derail-On" and "Derail-Off" lighted indications.
Dimensions: 6¾"Hx10½"Wx16"L. Weight: 4 lbs.
Part No.: 415-03-00
Also available in Wall-Mount model.

RIGHT ANGLE CRANK

Space limitations sometimes require DeLectric to be mounted parallel to the track. This is accomplished with the use of the Right-Angle Crank. Comes complete with 30" Crank/Derail Operating Rod.
Dimensions: 3⅝"Hx13"Wx16¾"L.
Weight: 62 lbs. with rod. Part No.: 410-04-00

For further information or special applications write us.

WESTERN-CULLEN-HAYES, Inc.
2700 West 36th Place • Chicago, Illinois 60632
Telephone: 312/254-9600 • Telex 25-3206

ELDO WESTERN-CULLEN-HAYES Electric Lock Derail Operator

- **PROTECT WORK AREAS, EQUIPMENT** Satisfy FRA, OSHA Requirements
- **MANUAL OPERATION, ELECTRIC LOCK** 120 VAC Operation
- **ONE UNIT, EASY TO INSTALL** Easy to Operate
- **RUGGED CONSTRUCTION** Designed and Manufactured by Western-Cullen-Hayes
- **MANY ACCESSORIES** Flexible System Adaptable to Your Requirements

The Electric Lock Derail Operator (ELDO) is a manual operator of Hayes® HB, KA or HB/Wheel Crowder Series Derails.

Trains entering work areas without warning have caused serious injuries and considerable destruction to plant and equipment. The Electric Lock Derail Operator (ELDO) is designed to protect against such hazards by providing double-checked security for these areas. This is accomplished by electrically locking the operating lever that moves the Hayes® Model HB, HBP or KA Derail, and placing the control for this lock under the supervision of a responsible person/persons in the work area. If a movable door, gate, etc. is involved, the control circuit for the ELDO can be interlocked to prevent the derail from being removed from the derailing position until the door is fully open. Our Target Mount provides a passive indication of derail position to the train crew, and is recommended to be a standard part of all ELDO installations.

This uncomplicated device greatly enhances the security and safety of any railroad-related work area. Workmen know a train is approaching before it can proceed past the derail location. Train crews are responsible for removing and replacing the derail, virtually eliminating the possibility of inadvertent derailment. The simplicity of ELDO encourages proper maintenance, insuring reliable operation, a reduction in potential for serious injuries, and damage to plant and equipment.

WESTERN-CULLEN-HAYES, Inc.
2700 West 36th Place Chicago, Illinois 60632 • (312) 254-9600

ELDO ACCESSORIES

SWITCH LAMPS

Poly-carbonate plastic type. Complete with single contact, bayonet base bulb socket and cable grip. Available in green, yellow, red, blue and white. Specify two colors. Consult with serving railroad before specifying. Fits standard lamp tip furnished with target mount.

Dimensions: 7½″x7½″x8″H **Weight:** 3 lbs. **Part No.:** 38-0080-4

Cast aluminum type. Complete with single contact bayonet base bulb socket and cable grip. Targets and lenses available in several color combinations. Consult with serving railroad before specifying. Fits standard lamp tip furnished with target mount.

Dimensions: 10 7/16″x10 7/16″x12 3/8″H **Weight:** 15 lbs. **Part No.:** 1880 Series

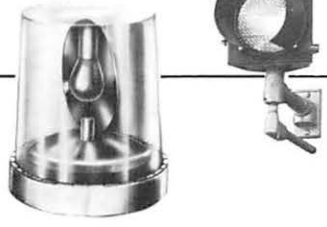

TRAIN SIGNAL

Polycarbonate housing. Two Light Signal. Top signal red, bottom yellow. 8″ lenses. Uses standard traffic signal lamps, 110 VAC, 67 WATT.

Dimensions: 10″Wx20″Hx13″D **Weight:** 8 lbs. **Part No.:** 415-07-00

REVOLVING LIGHT

Reflector rotating around a 25 watt lamp provides 60 attention getting flashes per minute. 120 VAC operation. Mounting flange tapped for ½″ conduit or pipe.

Dimensions: 5⅛″Dia.x6¼″H. **Weight:** 2 lbs. **Part No.:** 415-06-00

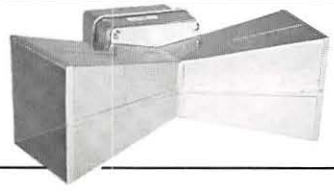

HORN

Loud (97db at each projector) output alerts workmen. Double projector unit with weather-proof housing for flush mounting. Tapped for ½″ conduit. Draws .16 AMPS, 12 WATTS, at 120 VAC.

Dimensions: 4⅜″Hx11½″Wx8½″D **Weight:** 4½ lbs. **Part No.:** 415-05-00

CONTROL CONSOLE

SINGLE UNIT CONTROL Console equipped to control one ELDO. Two position key-type switch provides security. Key can be removed in either position. Contact configuration, two normally closed contact per position. Current capacity of contact is 60 AMPS make, 6 AMPS break, 10 AMPS continuous, at 120 VAC. Complete with "Request", "Derail-On" and "Derail-Off" lighted indications.

Dimensions: 6¾″Hx10½″Wx16″L **Weight:** 4 lbs. **Part No.:** 415-09-00

FOUR UNIT CONTROL CONSOLE As above but with four sets of controls and indications.

Dimensions: 12″Wx16″Lx9½″H **Weight:** 22 lbs. **Part No.:** 415-08-00

DOOR LIMIT SWITCH

For interlocked control of ELDO electric lock, train signal and possible actuation of warning apparatus. MAXIMUM current capacity of contacts is 15 AMPS break, 40 AMPS make, at 115 VAC.

Double Pole, Single Throw
Weight: 1 lb. **Part No.:** 400-55-00
Double Pole, Double Throw
Weight: 1 lb. **Part No.:** 400-14-00

RIGHT ANGLE CRANK

Space limitations sometimes require ELDO to be mounted parallel to the track. This is accomplished with the use of the Right Angle Crank. Comes complete with 30″ Crank/Derail Operating Rod.

Dimensions: 3⅝″Hx13″Wx16¾″L
Weight: 49 lbs.wo/rd. **Part No.:** 410-00-00
Crank & Rod:
Weight: 62 lbs. **Part No.:** 410-04-00

EXTRA LENGTH OPERATING RODS

For use where laws require placement of equipment no closer than 8′6″ from center line of track.

For ELDO
Weight: 38 lbs. **Part No.:** 416-19-01
For Target Mount
Weight: 14.5 lbs. **Part No.:** 412-08-00

WESTERN-CULLEN-HAYES, Inc.
2700 West 36th Place
Chicago, Illinois 60632 • (312) 254-9600

© 1979, Western-Cullen-Hayes, Inc.

Safety and dependability:
standard with Western-Cullen-Hayes

Blue Flags

Meet FRA rules, OSHA requirements

Portable Blue Flag Model RBF & RBFL

Rail Clamp Design. Universal fit. RBFL has locking provision. Available with battery-powered blue light accessory. Specify type flag message and if light is desired.
Weight: 14 lbs. w/o light—RBF.
Weight: 16 lbs. w/o light—RBFL.

Portable Blue Flag Model BF

Spike Staff Design. Has self-contained driver. Pointed for applying to ties or ballast. Available with battery-powered blue light accessory. Specify type flag message and if light desired.
Weight: 12 lbs. w/o light.

Permanent Blue Flag Model BFH Folds Down Flush Ground Level

Hinged Design. Simply spike base to tie in center of track. To lower, lift staff from holder, then lower to horizontal position. Available with battery-powered blue light accessory.
Weight: 12 lbs. w/o light.

(Right Hand-TS)

(Left Hand-EBF)

Derail Equipped Blue Flags

Model TS Portable Derail with Blue Flag

Model TS Portable Derail backs a blue flag warning with a positive derail safety measure for temporary protection of working areas or car during loading. The derail is rugged, all-welded steel construction. Easy to install; no special tools required. Single direction throw. Can be padlocked. Fits standard "T" rail 75 lbs. to 136 lbs. Specify right or left and flag style.
Weight: 44 lbs. w/o light.

Model EBF Permanently Installed Derail with Blue Flag

Model EBF, a heavy duty permanently mounted hinged derail, featuring an integral Blue Flag that can be equipped with a battery-powered blue light. Meets requirements of Blue Flag rules for track where consistent use of Blue Flag Derails are necessary. Specify size, right or left and flag style.
Weight: 155 lbs. w/o light.

Full details on EB Series and other derails are available in Hayes Track Products section of our catalog.

WESTERN-CULLEN-HAYES, Inc.
120 North 3rd Street • P.O. Box 756
Richmond, Indiana 47374 • Telephone: 317/962-0526

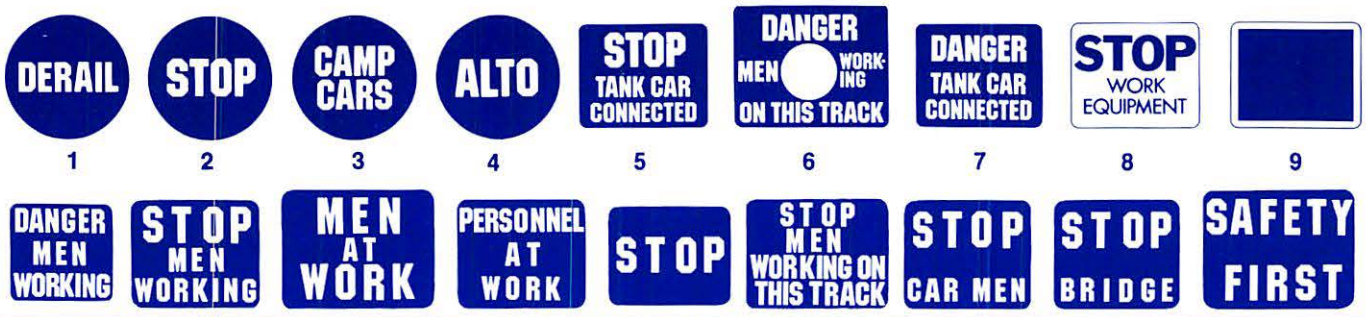

1 2 3 4 5 6 7 8 9

10 11 12 13 14 15 16 17 18

Eighteen Standard Flag Styles Available (Special signs made on order)

All Blue Flag products can be equipped with any one of the eighteen standard flags shown above or, at additional cost, with a flag lettered to your specifications. All flags are 14 gauge steel, white letters on blue background. Reflectorized flags also available. Letters: 4" high main message; 2" high other words. All flags equipped with lantern hook. Styles 1-4 are 10" circular. Styles 6, 12, 18—15" x 18", Style 10—11" x 9", Style 14—10" x 14". All other styles are 12" x 15". Other colors also available.

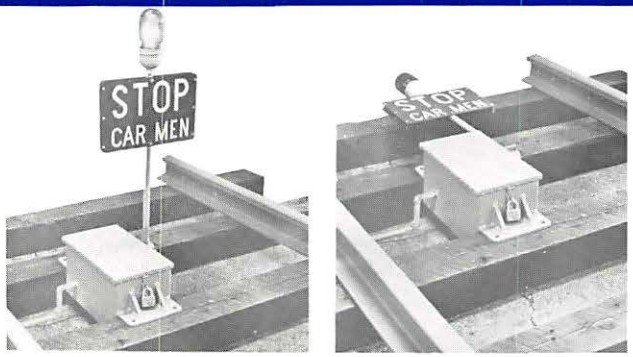

Power Blue Flag Model PBF

A remote controlled Power Blue Flag provides the ultimate in blue signal protection for men working on or in railroad cars. Built to survive abuse, it saves countless expensive labor hours by permitting remote replacement of FRA- and OSHA-required blue signal protection. A mercury switch circuit closure permits a positive readback indication of flag position. Your choice of flag message.

Additional Features: **Lockable Cover — Flag Staff rotates in bronze bearings with "O" ring seals. — Can be used in conjunction with DeLectric® Derail Operator.**

Specifications:

Materials: Case — 3/8" HR Steel.
Case Cover — 12 gauge steel floorplate.
Flag Staff — ¾" Ex. Hvy. Pipe.
Blue Flag — 16 gauge aluminum.
Light — 50 watt, rough service bulb housed in high-impact plastic globe. Neoprene gasket seat to assure dryness.

Finish: Case & Staff — Battleship Gray Enamel.
Flag — White reflectorized letters on a blue reflectorized background.

Weight: Weight — 120 lbs. (Case and Flag).

Dimensions: Case — 10" H x 10-¾" W x 16-¾" L.
Flag — 12" H x 15 " W.
Length Over Mounting Flanges — 24-¼".
Flag Upright — 30" above ties.

Electrical: Motor — 120 VAC, 50-60 Hz, 1.3A to full load.
Relays — Plug-in type, SPDT, contacts rated 10A/115 VAC Industrial grade.
Limit Switches — SPDT, contact rated 10A/120 VAC.
Mercury Switch — Differential angle 12° maximum, contact rated at 4/5A/115 VAC.

Technical Manual and Circuit Schematics available on request.

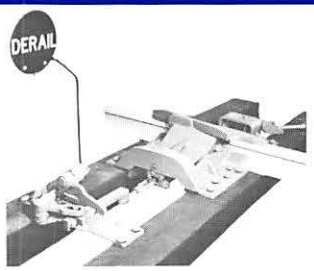

Automatic Mechanical Blue Flag Model AMBF

Provides clearly visible warning. Automatically situated in the upright position when the derail is on-rail. This device can be purchased as part of a unit (Derail, Operating Stand and AMBF Blue Flag) or independently for adding to existing Hayes® HB or KA series derail equipment. Not for double throw derails. Use right hand flag with right hand derail. Specify flag style.
Weight: 68 lbs.

Paved Area Blue Flag Model PABF

Use in paved areas where other flag types not adaptable. Ideal in heavy vehicular traffic areas. Specify flag style.
Weight: 16 lbs.

Blue Flashing Light Accessory

Battery operated Blue Light with 12 volt bulb. Uses two 6 volt lantern batteries. Photo cell controlled. 7" Blue Lens. Installs on staff of flag or can be used separately on ground. Special fastener for theft protection (wrench provided).
Weight: 5 lbs.

WC Hayes
WESTERN-CULLEN-HAYES, Inc.
120 North 3rd Street • P.O. Box 756
Richmond, Indiana 47374 • Telephone: 317/962-0526

MODEL 100 CIRCUIT CONTROLLERS

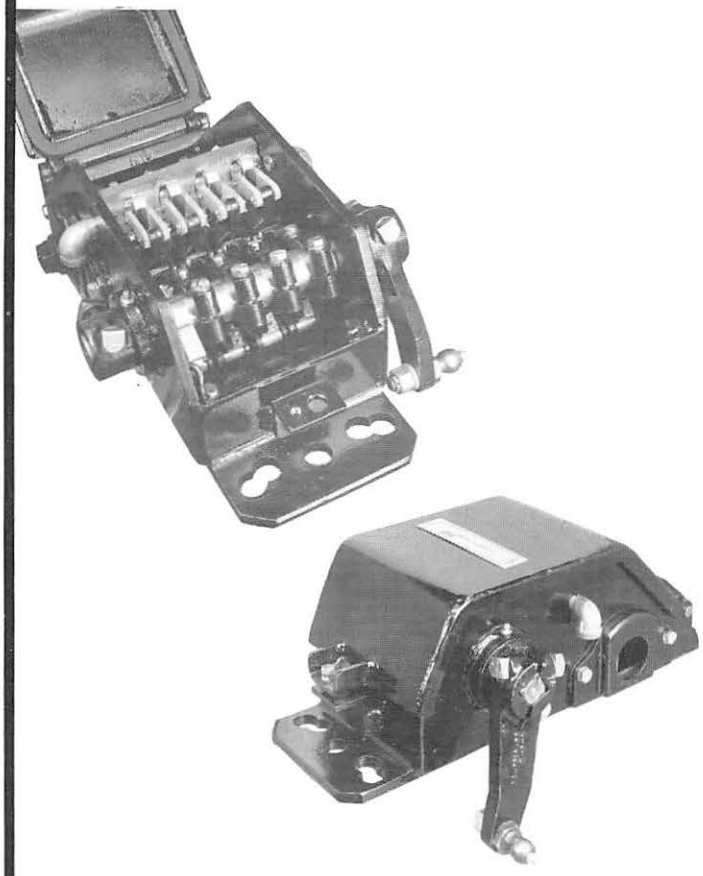

UNUSUALLY DURABLE

- 3/8 inch plate steel construction tough to break–easy to repair
- 1½" diameter shaft

MANY CONFIGURATIONS

- 2 and 4 cam/contact set units
- 2 and 3 position cams
- With or without return spring
- Two crank arm options
- Non-insulated and insulated ball studs

RELIABLE

- Contacts positively driven in both directions
- Quick response, three degree movement of crank arm actuates contacts

ADAPTABLE

- Six mounting holes, two slotted holes at each end on 4"/5" centers, one at each end on center line of case
- Wide variety of accessories

W-C-H MODEL 100 CIRCUIT CONTROLLERS MEET KEY AAR REQUISITES (Manual Part 12.1.1)

Particular attention has been paid to Association of American Railroads design requirements established for Operating Shafts, Operating Cams, Contacts, Cam/Contact Responsiveness, Cam/Contact Inter-relationships and Unit Dielectric Characteristics.

GENERAL COMMENT

Circuit controllers are used to provide positive electrical indication of the position or condition of switch points, derails, bridges, slide fences, etc. Such indication can modify signal aspects to restrict train movement, actuate crossing signals or turn on alarms of various types. Circuit controllers are capable of controlling relay circuits or shunting track circuits. Usually a heavy (1" dia) steel rod connects the circuit controller to the device being checked. Units can be purchased with internal return springs that will "detect" a broken operating rod by moving the operating shaft so that the cams cause contacts to open, resulting in a restrictive or alarm condition.

Design concepts for the Model 100 Circuit Controller have evolved over time and address the needs of the railroad industry. These needs include durability through a wide range of abusive environmental conditions, reliable performance to precise and exacting standards and a device that presents a very low maintenance burden over an extended service life.

WESTERN-CULLEN-HAYES, Inc.
2700 West 36th Place • Chicago, IL 60632-1682

MODEL 100 CIRCUIT CONTROLLERS

UNIT SPECIFICATIONS

Physical Characteristics

CASE

1. Drainage Hole: ¼", plugged
2. Wire Openings: Two holes, 3 sq. in., one each side
3. Mounting Lug Offset: ⅛", to permit drainage
4. Over-all Height: 7"

COVER

1. Furnished with weather-proof gasket
2. Removable when unlocked and fully opened
3. Secured with railroad signal type lock-bolt. Separate openings on lock tabs permit use of private lock with ⅜" dia. shackle

VENTILATION

Two hooded ventilators, each ¼ sq. in., one each side

SHAFT

1. Diameter: 1¼" steel
2. Bearings: 1" long, I.D., 0.003" larger than O.D. of shaft, with annular grease grooves
3. Operating crank and/or shield can be mounted to either end
4. Shaft has hobbed threads to permit micrometer adjustment of cams.

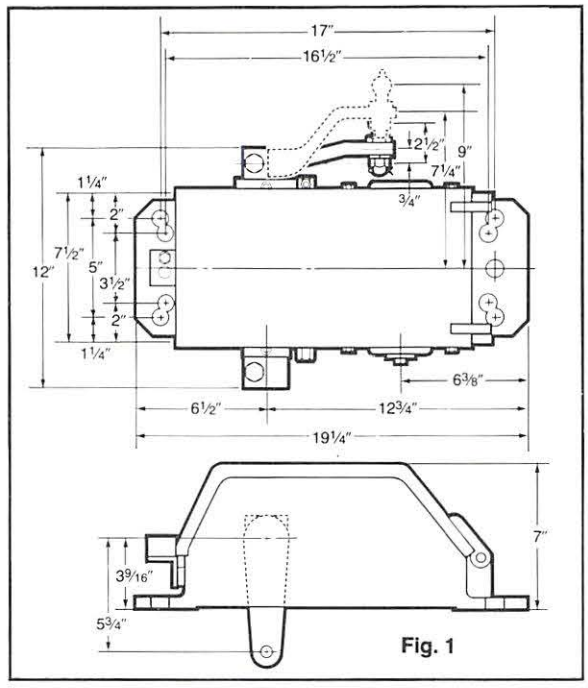

Fig. 1

TERMINAL BOARD AND TERMINALS

1. Terminal board of linen-based bakelite for strength and durability. ¾" thick
2. Terminals retained in terminal board to prevent turning, on 1⁷⁄₁₆" horizontal centers, 1⅛" vertical centers
3. Temperature range −40° F to +185°F

Electrical Characteristics

1. Contact Rating: 15A, continuous
2. Dielectric Capacity: 3000 VAC between all parts of electrical circuits and other parts insulated therefrom, for one minute
3. Surface Leakage: Not less than ¼" between any exposed current carrying part and any other metallic part

CONTACTS

1. Gap: Not less than 1⁄16" when opposite contact just closes
2. Travel: Not less than ¼"
3. Wipe: Not less than 1⁄32"
4. Pressure: In closed position, not less than 3 lbs., 8 oz.

CAMS

1. Separately adjustable with micrometer adjusting screws. Independent lock screws provided to secure cams in proper position.
2. Cams force and mechanically retain contacts in all positions
3. Throw–Maximum 9" without return spring option. Will accommodate normal track switch (3½"–5½") and derail (EB-5½", HB, HBP-6¼") throw with return spring
4. Two position cams can be used as three position cams by using two cam/contact spaces for each three position circuit

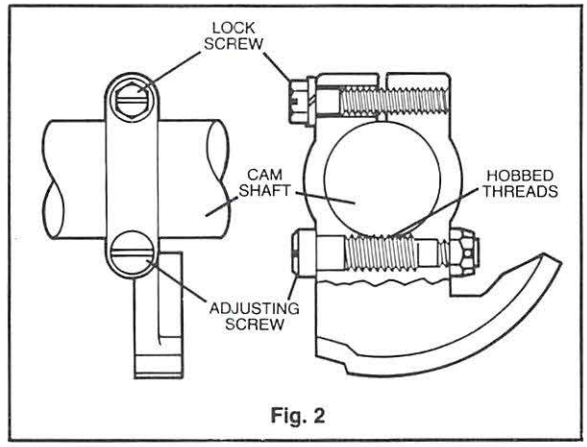

Fig. 2

WESTERN-CULLEN-HAYES, Inc.
2700 West 36th Place • Chicago, IL 60632-1682

MODEL 100 CIRCUIT CONTROLLER

THEORY OF OPERATION

Model 100 Circuit Controllers are used to make or break electrical circuits, in response to the movement of derails, switch points, etc. A heavy (1" dia.) operating rod connects the Circuit Controller Crank to the device being checked for movement. In the "on", "closed", etc. position the device is considered to be in the "normal" position. (See Figure 3, below.) When the device comes "off", "opens", etc., the Crank Arm rotates, positioning cams and contacts in the "reverse" position. (See Figure 4, below.) Note that the "normal" and "reverse" positions depicted in Figures 3 and 4 are themselves reversed when the circuit controller is used with the Model EB Hinge Derail.

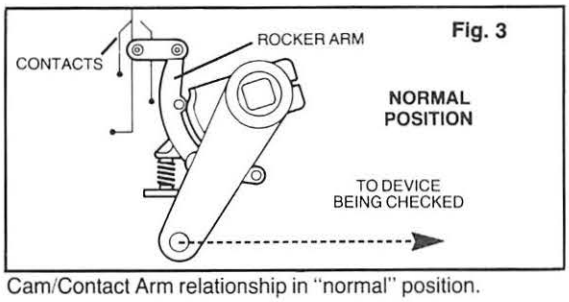

Cam/Contact Arm relationship in "normal" position.

Because the W-C-H Model 100 Circuit Controller, is twice reversible (box can be turned end-for-end and Crank Arm can be mounted on either side), "normal" and "reverse" positions for the cam/contact sets are determined by the position they take when the Circuit Controller is installed and connected to the device being checked. The usual installation orientation for the Model 100 Circuit Controller is with the cover hinges toward the field (away from the track). All installation and circuit diagrams in this brochure are shown assuming such installation orientation.

Note that with such installation orientation the "normal" and "reverse" contact closures for the Model EB Hinge Derail will be reversed.

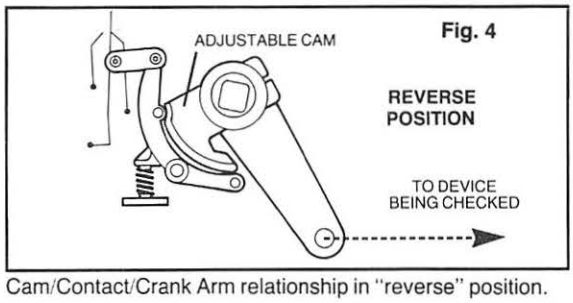

Cam/Contact/Crank Arm relationship in "reverse" position.

DERAIL APPLICATIONS

Derails are safety devices used to protect people and equipment from injury or damage. The need to have a reliable means to detect the position of the derail is obvious. W-C-H Model 100 Circuit Controllers are used for this purpose. Whether the method employed to move the derail is manual, manual (but electrically locked), or electrically powered, safety is enhanced with the use of a Circuit Controller.

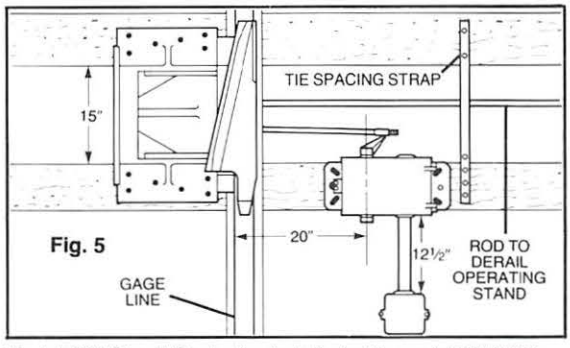

Model 100 Circuit Controller installed with model HB/HBP Sliding Derail. Suggest using circuit controller Piece No. 38-0100-99, or 38-0100-105 (see page 16-6), and operating rod Piece No. 38-0100-201 (see page 16-7). Use terminal housing 1182-22 in this application.

Once you have determined which derail is appropriate for your particular application (if in doubt consult W-C-H personnel), the remaining considerations take care of themselves. Figures No. 5 and 6, below, depict typical installations for manually operated derails. Consult factory or appropriate catalog section if Circuit Controller is being used with ELDO or DeLectric Derail Operators. Circuiting can be by either method shown on Page No. 16-5 or a variation thereof. Note that with Model EB Hinge Derail, the "normal" and "reverse" contact closures depicted will be reversed.

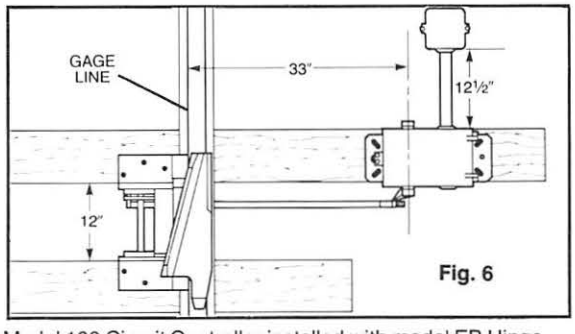

Model 100 Circuit Controller installed with model EB Hinge Derail. Suggest using circuit controller Piece No. 38-0100-99, or 38-0100-105 (see page 16-6), and operating rod Piece No. 38-0100-215 (see page 16-7). Use terminal housing 1182-22 in this application.

WESTERN-CULLEN-HAYES, Inc.
2700 West 36th Place • Chicago, IL 60632-1682

MODEL 100 CIRCUIT CONTROLLERS

TRACK SWITCH APPLICATIONS

In areas where train movements are controlled for safety or productivity purposes, reliable indication of track switch position is essential and requires the use of a circuit controller. A typical installation, with key components identified, is depicted at right in Figure No. 7.

Fig. 7

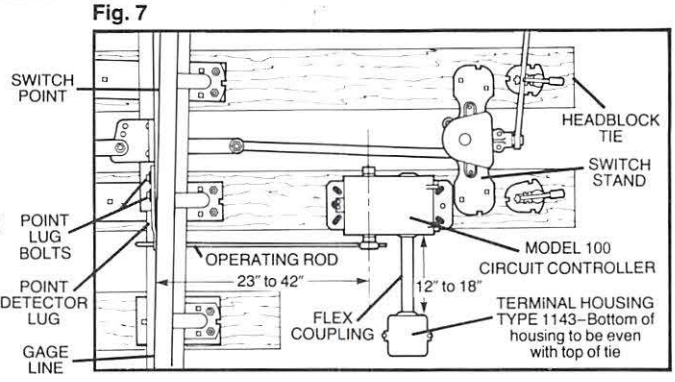

APPLICATION CONSIDERATIONS

Using a Model 100 Circuit Controller with a track switch requires that the design engineer take several factors into consideration.

1. Cam Position Types–References are made to "two position" and "three position" cam configurations. Two-position cam applications result in circuiting that indicates when the switch points are at their full "normal" and/or full "reverse" locations. Three-position cam applications permit an additional indication, that of the switch points being "in transition" between full "normal" and full "reverse". Usually, circuit controllers are purchased to match the cam configuration desired. However, a Model 100 Circuit Controller with two-position cams may also be used for three-position applications by using two cam/contact sets for each circuit and making the necessary cam adjustments. Because circuits using two-position cams are most common, they are depicted in this brochure.

2. Use of the Return Spring–Purpose of the return spring is to force open the contacts to permit a restrictive train signal indication should the Operating Rod become broken or disconnected.

Fig. 8

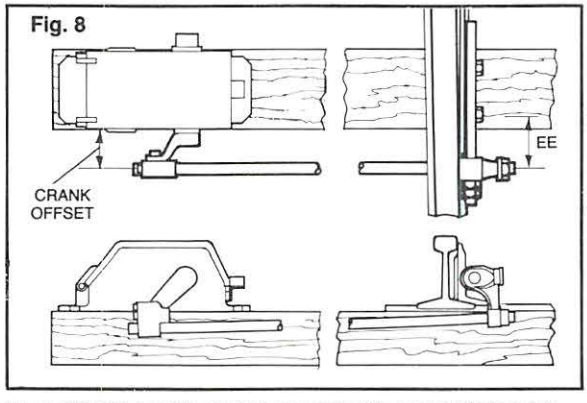

Model 100 Circuit Controller connected to near switch point. To determine crank offset, first select proper Point Detector Lug. Consider Dimension "EE" when selecting lug.

This option is available on Model 100 Circuit Controllers.

3. Crank Offset–Two offsets are offered. Consider tie location and Dimension "EE" of Point Detector Lug (See below and Pages 16-2, 16-8) to determine proper crank offset. Alignment of the operating rod between the point detector lug and the Model 100 Circuit Controller should be as close to perpendicular as possible.

4. Ball Stud–Insulated and non-insulated ball stud options are available. In locations where the operating rod linkage to the Model 100 Circuit Controller could cause problems with track signal circuits or electric propulsion power, an insulated ball stud should be used.

5. Operating Rod–When selecting the operating rod, keep in mind that the point detector lug should be installed on the normally closed switch point (See Fig. 7, 8 and 9). The intended installation location of the Model 100 Circuit Controller is the other primary consideration. Select the appropriate "near" or "far-point" type operating rod of the desired length (See Page 16-7).

6. Point Detector Lug–As with the crank offset, tie location determines which point detector lug you should use (See Fig. 8, Fig. 9 and Page 16-8). Alignment of the operating rod between the point detector lug and the Model 100 Circuit Controller should be as close to perpendicular as possible. Also determine proper bolt size to match mounting holes in the switch point.

7. Terminal Housings–Terminal housings are used to terminate signal circuit wiring between the Model 100 Circuit Controller and the signal control case. Doing so helps to prevent damage to expensive control apparatus and makes repairs to underground wiring easier. It is recommended that the Type 1143 Terminal Housing be used for this purpose. (See Page 16-8 for details).

WESTERN-CULLEN-HAYES, Inc.
2700 West 36th Place • Chicago, IL 60632-1682

MODEL 100 CIRCUIT CONTROLLERS

TRACK SWITCH APPLICATIONS (Cont'd)

Fig. 9

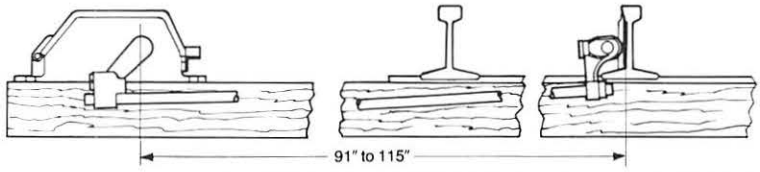

Model 100 Circuit Controller connected to far switch point. See Fig. 8 comment on crank offset and point detector lug selection.

CIRCUITING FOR ALL APPLICATIONS

Below are shown two typical circuits with proper Circuit Controller Terminal Board hook-ups. These circuits employ "two-position" type Cams and assume that the "normal" location is with the Crank to the left. Installation orientation of the Model 100 Circuit Controller is assumed to be with the cover hinges toward the field (away from the track). Circuits and hook-ups shown will vary if installation varies from these conditions.

Note: Due to the operating characteristics of the Model EB Hinge Derail, the circuiting depicted here should be reversed when such a derail is used with the Circuit Controller.

CIRCUIT WITH NORMAL POSITION INDICATION

Fig. 10

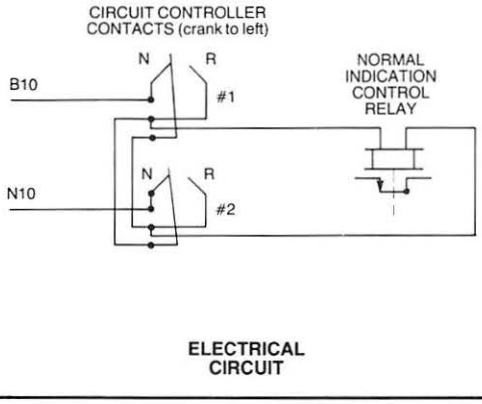

ELECTRICAL CIRCUIT

Fig. 11

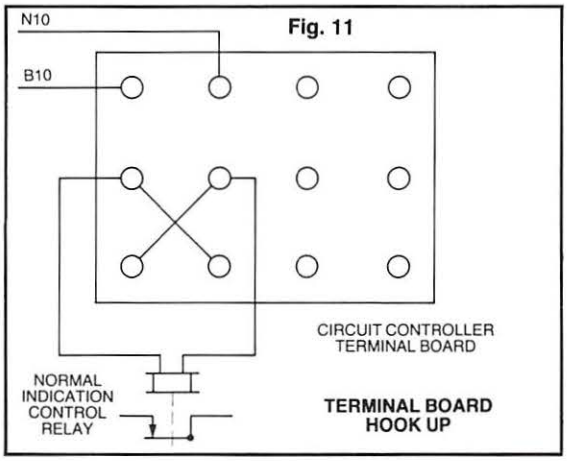

TERMINAL BOARD HOOK UP

CIRCUIT WITH NORMAL AND REVERSE POSITION INDICATIONS

Fig. 12

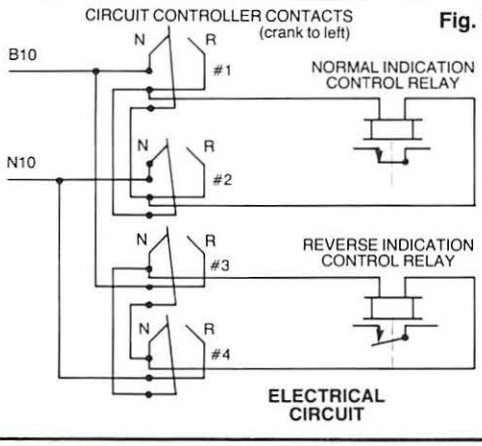

ELECTRICAL CIRCUIT

Fig. 13

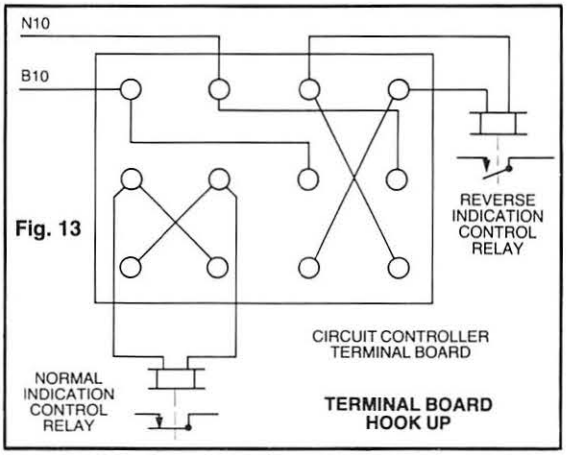

TERMINAL BOARD HOOK UP

WESTERN-CULLEN-HAYES, Inc.
2700 West 36th Place • Chicago, IL 60632-1682

MODEL 100 CIRCUIT CONTROLLERS

MODEL 100 CIRCUIT CONTROLLER

ORDERING REFERENCES

Cam Configuration	Return Spring	Crank Offset				Piece No.
		¾" Offset		2 3/32" Offset		
		Insulated Ball Stud	Non-Ins. Ball Stud	Insulated Ball Stud	Non-Ins. Ball Stud	
2-2 Pos	No		Yes			38-0100-98
2-2 Pos	No				Yes	38-0100-99
4-2 Pos	No		Yes			38-0100-100
4-2 Pos	Yes		Yes			38-0100-101
4-2 Pos	No				Yes	38-0100-105
4-2 Pos	Yes				Yes	38-0100-106
4-2 Pos	No	Yes				38-0100-110
4-2 Pos	Yes	Yes				38-0100-111
4-2 Pos	No			Yes		38-0100-115
4-2 Pos	Yes			Yes		38-0100-116
2-2/2-3 Pos	No		Yes			38-0100-120
2-2/2-3 Pos	Yes		Yes			38-0100-121
2-2/2-3 Pos	No				Yes	38-0100-125
2-2/2-3 Pos	Yes				Yes	38-0100-126
2-2/2-3 Pos	No	Yes				38-0100-130
2-2/2-3 Pos	Yes	Yes				38-0100-131
2-2/2-3 Pos	No			Yes		38-0100-135
2-2/2-3 Pos	Yes			Yes		38-0100-136

Model 100 Circuit Controllers are furnished complete as described above with one wiring access Cover Plate drilled for 1½" squeeze connector (Cover Plate PN: 1705-1A) and one drilled and tapped 1¼"–NPT (Cover Plate PN: 1705-1E) and capped with pipe plug.

COVER PLATES

REF. 1

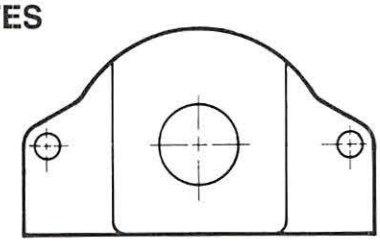

ORDERING REFERENCES

Ref.	Description	Piece No.
1	Cover Plate w/hole for 1½" squeeze connector	1705-1A
1A	Above, but w/2" NPT hole	1705-1B
1B	Above, but no hole	1705-1D
1C	Above, but 1¼"–NPT hole	1705-1E
1D	Above, but w/45° squeeze connector for 1½" flex coupling	38-0100-175

FLEX COUPLING W/WO COVER PLATES

REF. 2

REF. 3

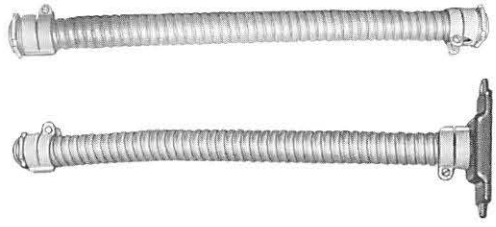

ORDERING REFERENCES

Ref.	Description	Piece No.
2	Flex Coupling, 1½" Dia. x 18" lg. w/two squeeze connectors	1703-2
3	Flex Coupling, 1½" Dia. x 18" lg. w/one squeeze connector and Cover Plate	1705-12
3A	Above, but 2" OD x 19½" lg. Rubber Hose	1182-24U

WESTERN-CULLEN-HAYES, Inc.
2700 West 36th Place • Chicago, IL 60632-1682

MODEL 100
CIRCUIT CONTROLLER ACCESSORIES

OPERATING ROD ASSEMBLIES FOR DERAILS

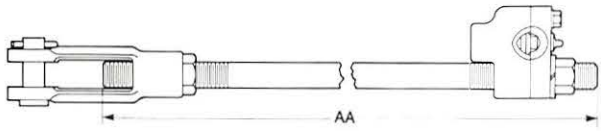

REF. 1

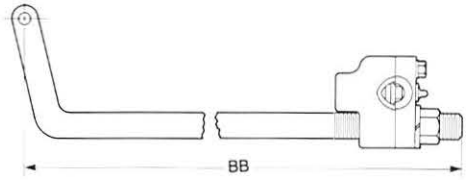

REF. 2

ORDERING REFERENCES

Ref.	Description	Piece No.
1	Operating Rod Assembly for use with Sliding Derail (W-C-H Model HB Series) when Derail is located on near rail (dimension AA-40″)	**38-0100-201**
1A	Above, but for use with Derail on far rail (Eldo & Delectric operator applications) (dimension AA-58″)	**38-0100-200**
2	Operating Rod Assembly for use with Hinge Derail (W-C-H Model EB Series) (dimension BB-42½″) Note: Special Operating Rod Assemblies available on request	**38-0100-215**

OPERATING ROD ASSEMBLIES FOR SWITCH POINTS

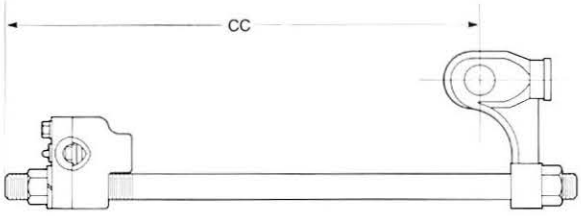

REF. 3

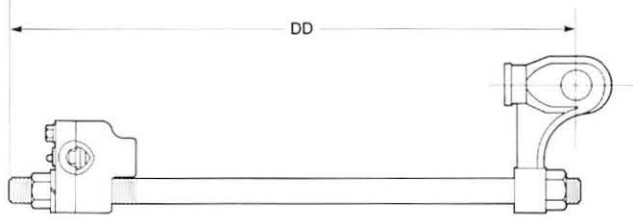

REF. 4

ORDERING REFERENCES

Ref.	Description	Piece No.
3	Operating Rod Assembly for use with near switch point (dimension CC-27¼″)	**38-0100-220**
3A	Above, but dimension CC-33½″	**38-0100-221**
3B	Above, but dimension CC-46½″	**38-0100-222**
4	Operating Rod Assembly for use with far switch point (dimension DD-95½″)	**38-0100-230**
4A	Above, but dimension DD-119½″	**38-0100-231**

WESTERN-CULLEN-HAYES, Inc.
2700 West 36th Place • Chicago, IL 60632-1682

MODEL 100
CIRCUIT CONTROLLER ACCESSORIES

POINT DETECTOR LUGS

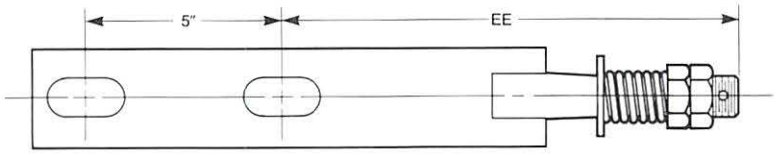

REF. 1, 2

ORDERING REFERENCES

Ref.	Description	Piece No.
1	Point Detector Lug Assembly Dimension EE-6¾" for ¾" bolts	38-0100-320
1A	Above, but dimension EE-8⅞"	38-0100-321
1B	Above, but dimension EE-11⅝"	38-0100-322
2	Point Detector Lug Assembly Dimension EE-6¾" for 1" bolts	38-0100-323
2A	Above, but dimension EE-8⅞"	38-0100-324
2B	Above, but dimension EE-11⅝"	38-0100-325
3	Washer Plate for ¾" bolts (not shown)	38-0100-350
3A	Above, but for 1" bolts (not shown)	38-0100-351
4	Set of 2 ¾" thin-head mounting bolts, nuts, washers (not shown)	38-0100-360
4A	Above, but 1" (not shown)	38-0100-361

TERMINAL HOUSINGS

REF. 5

REF. 6

ORDERING REFERENCES

Ref.	Description	Piece No.
5	Type 1182 Terminal Housing, complete with 2" OD rubber hose coupling and seven two-post terminals	1182-22
6	Type 1143 Terminal Housing, complete with 1½" dia. flex metal coupling and twelve single post terminals	1143-1

WESTERN-CULLEN-HAYES, Inc.
2700 West 36th Place • Chicago, IL 60632-1682

New "Fail-Safe" model is both a lamp and a reflectorized target

Designed for high visibility—night and day—the new Western-Cullen "Fail-Safe" model has already established a record of reliable performance.

It functions as an Electrified Lamp with fast, convenient bulb replacement, and as a "Fail-Safe" Reflectorized Target, should the bulb burn out.

An exclusive (U.S. Patent No. 3,458,245) "M" shaped lens doubles as a wide angle reflector, providing the "Fail-Safe" indication.

Unique "Cocked Switch" design

They also offer another unique Western-Cullen feature—a special indicator which signals DANGER: COCKED SWITCH! in addition to the traditional normal and reverse indications. Due to the shape of the lens, a double-color indication is displayed to the train crew if the switch point is gapping.

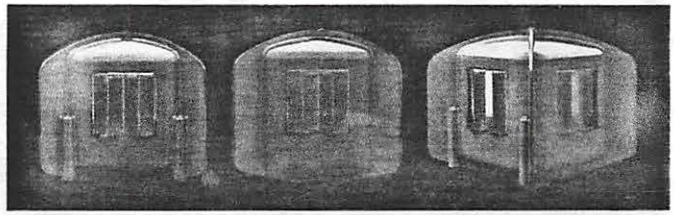

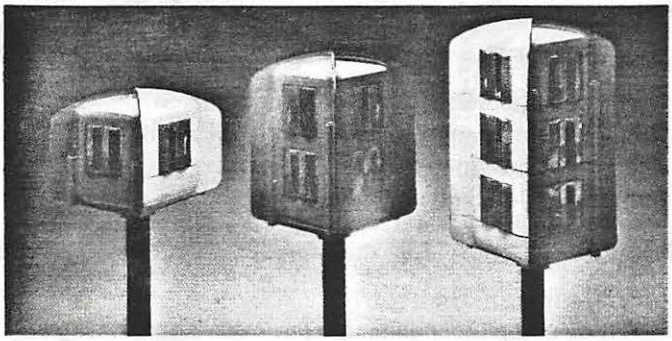

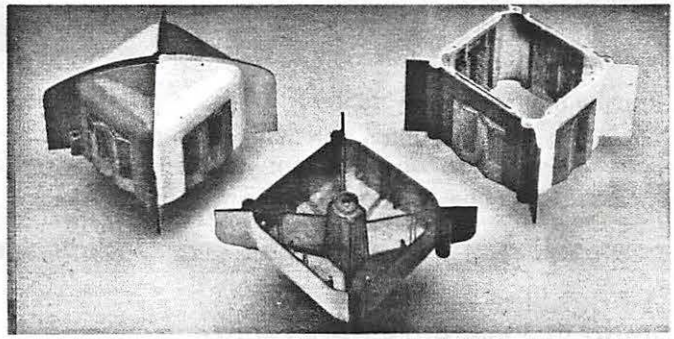

Modular construction

This Western-Cullen Electric Switch Lamp is modular in design to permit you to convert single units, ample for yards, into double or triple units for yard outer limits or main line uses.

All you have to do is insert one or two center modules. A fast, simple job.

Virtually indestructible

It's virtually indestructible, too. Every part of this W-C Electric Switch Lamp housing is made of tough, high-impact poly-carbonate (Lexan®). Theft is discouraged with internal mounting to the lamp tip.

Lenses are impregnated with a special release agent that tends to make them self-cleaning. An ultra-violet inhibitor permits us to guarantee the lens colors for five years. Housings are colored with a special "paint" that becomes part of the casing itself, preventing chipping and the need to re-paint.

Additional features

Designed to fit A.R.E.A. Lamp Tip Standard 251-64. Tip adapter kits or instructions are available to convert other lamp tips. Equipped with a standard single contact bayonet base light socket and cable entrance fitting.

Housings and lenses are available in five colors: red, blue, yellow, white and green.

How to order

Western-Cullen Switch Lamps are furnished as follows:

Item	Ordering Reference
Single Unit	38-0080-4
Double Unit	38-0080-5
Triple Unit	38-0080-6

Single and double units furnished in standard packages of ten, triple units in standard packages of five. Specify colors of housing and colors of lenses. List "thru" or "normal" switch position colors first. Light bulbs are not furnished. For lamp tips smaller than A.R.E.A. Standard 251-64, adapter kits are available.

Item	Ordering Reference
One Tip Adapter Kit	38-0080-19
10 Tip Adapter Package	38-0080-20

Three high-visibility models, built for a lifetime

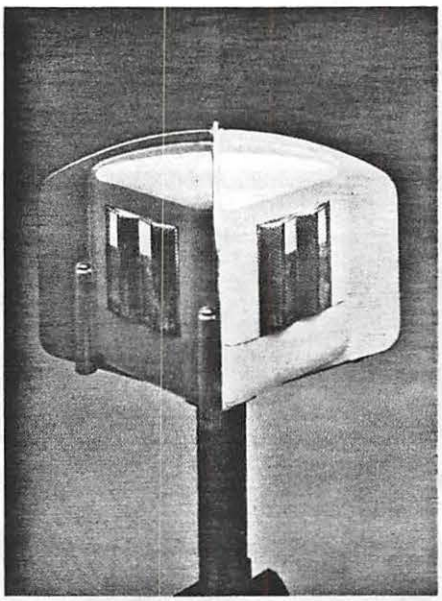

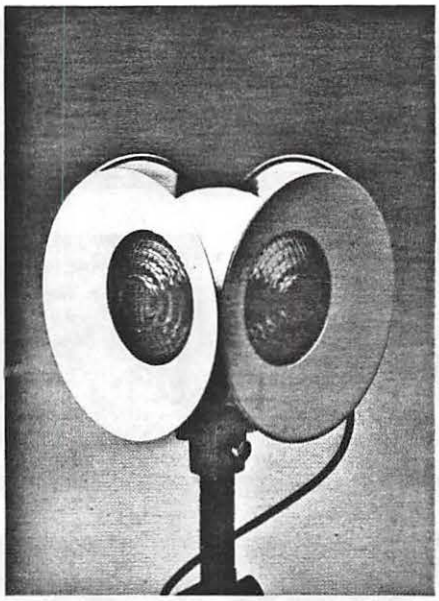

Provide brilliant, steady light

Allow safer yard operation with independent source of light for switch position indication

Increase night operating efficiencies

No flammable fuels to handle, no open flame

Reduce maintenance costs 50% over oil burning type

Theft-proof design

For both battery and commercial current

A bright idea that improves system safety records.

Western-Cullen Switch Lamps project a bright light straight down the right-of-way for maximum visibility.

And these Western-Cullen safety products will pay for themselves in two years' time by reducing your weekly operating and maintenance costs—significantly.

Consider the added security a train crew feels looking up a ladder track and determining switch position before a locomotive headlight beam hits a reflector—only target. You save time and *money* when a lighted indication is provided.

You have a choice of lamps made from two low-maintenance materials: virtually indestructable polycarbonate (Lexan®) plastic and durable, light-weight aluminum.

No fire hazards.

They completely eliminate the hazard of handling or storing flammable fuels, or the danger of open flames at each switch stand.

Plan now to provide your train crews with electric light switch position indicators. Western-Cullen is the brand to specify.

Package systems available simplify the material acquisition process

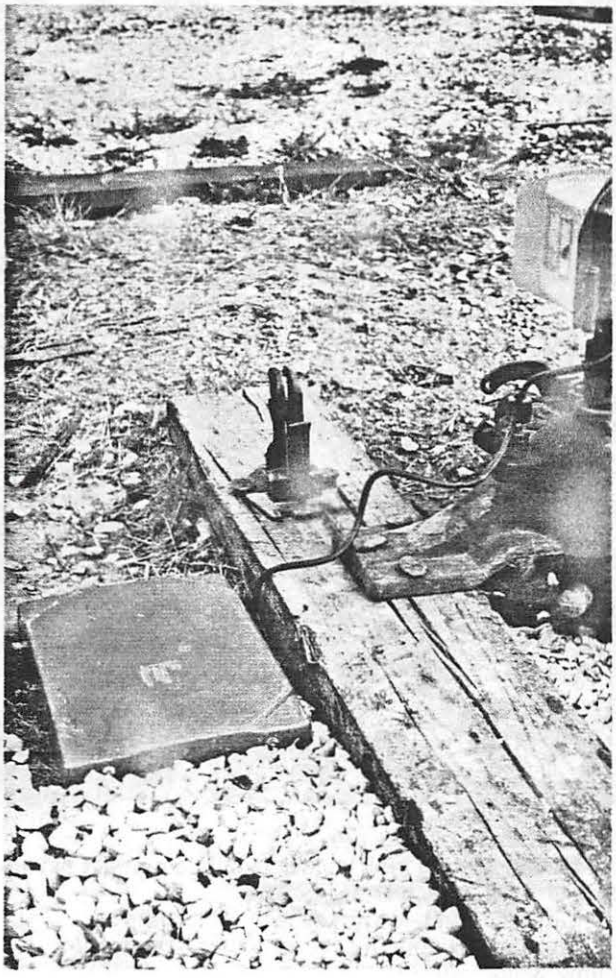

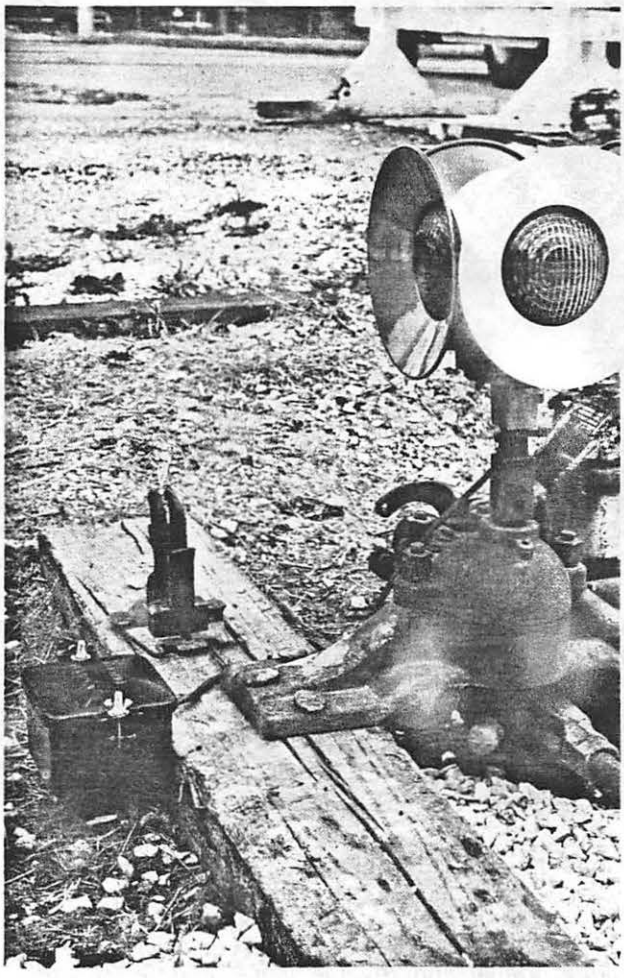

Package No. 1—For primary battery operation

Package No. 1 is complete with:

One Western-Cullen Electric Switch Lamp (specify type of lamp, lens and target colors, lamp tip dimensions, etc.).

One No. 1245A-40P "Everlast" Battery Box to accommodate Edison Type ST Carbonaire battery, or equal (if battery is to be supplied, please so specify).

4 to 15 feet of 2-conductor neoprene covered cable (as specified).

Three cable clamps (for securing cable to switch stand staff).

Package No. 2—For commercial current operation

Package No. 2 is complete with:

One Western-Cullen Electric Switch Lamp (specify type lamp, lens and target colors, lamp tip dimensions, etc.).

One Type 1183-50 Underground Cable Terminal complete with voltage step-down transformer. Transformer will operate 10 volt, 0.3 ampere lamps from 115-volt, 60 cycle source. One transformer will handle up to four Switch Lamps.

4 to 15 feet of 2-conductor neoprene covered cable (as specified).

Three Cable Clamps (for securing cable to switch stand staff).

When ordering

The above packages can be supplied with any of the Switch Lamps featured in this brochure.

Please furnish the information identified as necessary when specifying your particular choice of Switch Lamps.

Aluminum models offer many variations to meet specific needs : Types 1870 & 1880

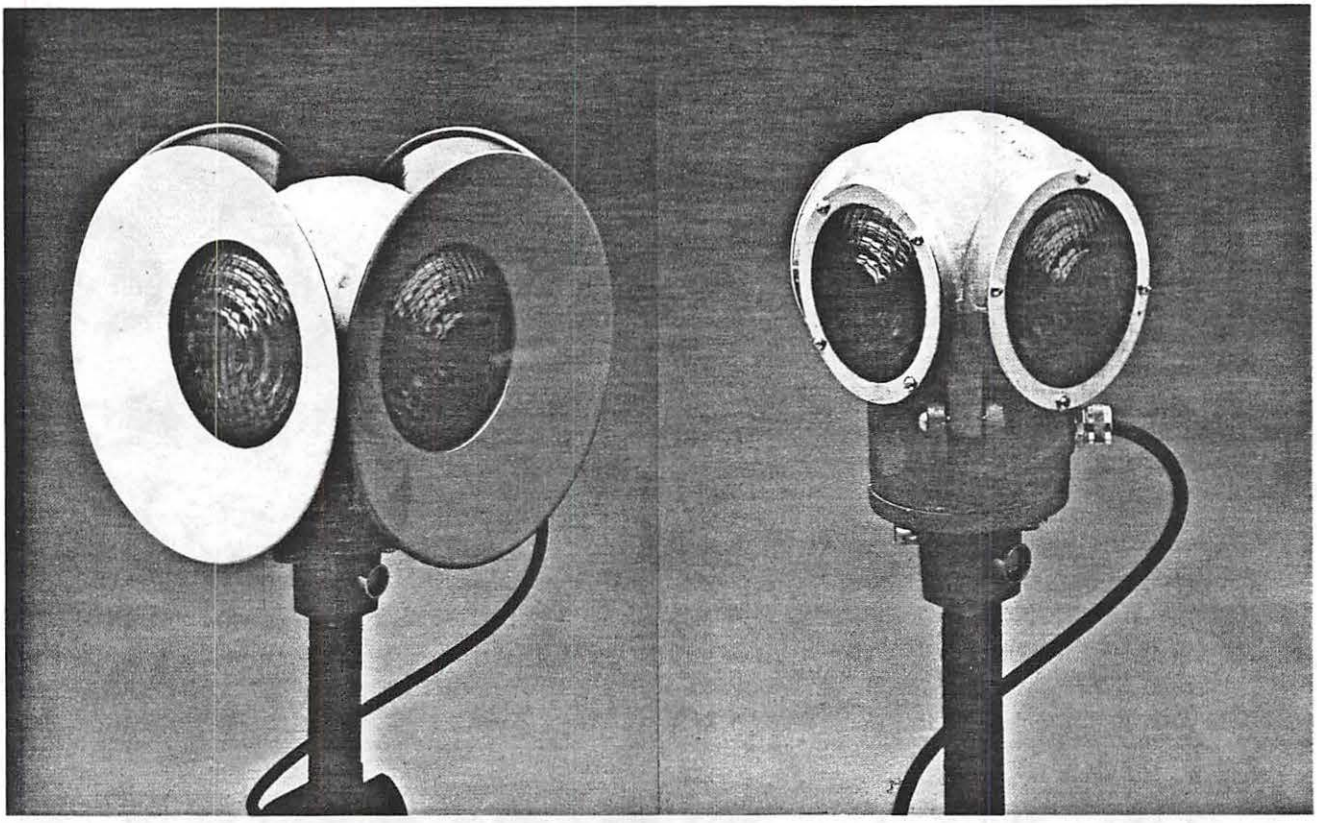

Low-maintenance, cast aluminum switch lamps are configured to satisfy all operating requirements.

Can be furnished to fit any lamp tip—specify dimensions with order.

Many lenses available—see chart below. Type 1870 provides "normal" and "reverse" lenses of different sizes to guard against error during maintenance. With type 1880 all lens openings are of equal size.

[redacted] light bulb sockets—single contact bayonet base [redacted].

Can be furnished with or without targets.

Targets available in several colors—red, green, yellow, white, purple.

Glass Lenses

Lamp Type	Lens Description	Color
1880	5⅜" Dia., 30° Horiz. Spread, 10° Up. Deflection	red, green, lunar white, yellow
1870	4⅛" Dia., 5° Horiz. Spread, 2½° Vert. Spread, 10° Up. Deflection	green, lunar white
1870	4½" Dia., 30° Horiz. Spread	red, green, yellow
1870	4½" Dia., 5° Horiz. Spread, 2½° Vert. Spread, 10° Up. Deflection	red, yellow, lunar white

Plastic Lenses—resist breakage

Lamp Type	Lens Description	Color
1880	5⅜" Dia., 30° Horiz. Spread, 10° Up Deflection	red, green yellow, purple
1870	4½" Dia., with reflective outer ring	red and yellow
1870	4⅛" Dia., with reflective outer ring	green

How to order

Specify type of switch lamp desired and indicate options preferred (as itemized above). Also indicate whether or not light bulbs are to be furnished with lamps.

The "Everlast" battery box

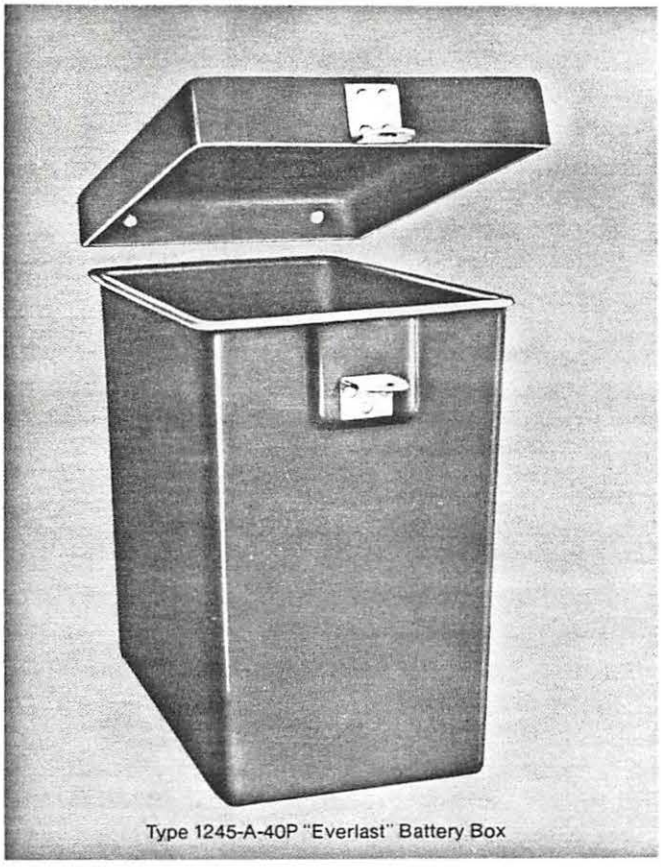

Type 1245-A-40P "Everlast" Battery Box

Durable enough to be impervious to chemical attack, rugged enough to withstand ballast damage, the "Everlast" Battery Box sheds spray, sleet, rain and snow.

Yet it's efficient design assures adequate ventilation.

Made of durable reinforced fiberglass, it has two pre-formed ridges in the base of the box which eliminate the need for a wooden platform.

The cover is held in position by two brass retaining studs, permitting the cover to be completely removed when required. A stainless steel hasp permits locking.

WC Hayes

WESTERN-CULLEN-HAYES, Inc.

2700 West 36th Place • Chicago, Illinois 60632 • Telephone: 312/254-9600 • Telex 25-3206

WESTERN-CULLEN-HAYES, Inc.
2700 West 36th Place • Chicago, Illinois 60632 • Telephone: 312/254-9600 • Telex 25-3206

Thank you for responding to our recent advertisement concerning the Type 12 Arrester Tester. Enclosed please find a sales brochure detailing this product.

Everyone who deals with signal or communications gear needs to check lightning arresters, if not on a preventative maintenance basis, at least on a trouble-shooting basis. The job can't be made more simple than we make it with the Type 12 Arrester Tester.

Further, by providing a digital readout of the striking voltage, guesswork is eliminated. With the cost of today's signal and communications apparatus, one ineffective arrester found will more than cover the low price of the Type 12 Arrester Tester. And, shipments from stock make it easy to come by. Prompt attention will be given to your inquiries and orders.

Yours truly,

Jon P. Schaefer
Sales Manager

JPS:ga
encl.

WESTERN-CULLEN-HAYES TYPE 12 SURGE ARRESTER TESTER

An accurate, direct reading, digital tester for measuring breakdown voltage (firing voltage) of both gas tube (2 and 3 electrode) and carbon surge arresters.

- Reading is true representation of "cold-tube" breakdown voltage compared to repetitive firing testers which read only average breakdown value.
- Measurement is non-destructive to carbon as well as gas tube arresters since an accurate measurement is made from a single, low energy discharge.
- Three digit LED display reads breakdown voltage of arrester directly—0 to 999 volts.
- Digital display is clearly visible under most ambient lighting conditions and free of scale reading errors.
- Accuracy is unaffected by physical abuse unlike testers using moving coil meters—has no delicate moving parts.
- Extremely long battery life because of low duty cycle—uses inexpensive alkaline AA cells.
- Small, lightweight, and rugged—easily hand-held or pocket carried.

WESTERN-CULLEN-HAYES, Inc.
2700 West 36th Place • Chicago, Illinois 60632

OPERATING DESCRIPTION

For testing, an arrester is removed from the remainder of the circuit by lifting it out of its holder or by disconnecting the arrester assembly from the lines. The TYPE 12 is then connected to the surge arrester by two clip leads or other convenient connector. For polarity sensitive arresters, the leads are coded—red positive, black negative. When the TEST KEY is depressed, a steadily increasing voltage is applied across the arrester. This test voltage is monitored until the arrester breaks down or fires, at which instant the breakdown voltage value is displayed digitally, and the test voltage generator is halted, preventing any possible deterioration of the arrester. The breakdown voltage, however, will remain displayed until the TEST KEY is released. A reading of 999 indicates that the breakdown exceeds the range of the tester. A very low reading, less than 10 volts, indicates a shorted arrester.

Battery condition is checked by depressing the TEST KEY with the test leads open. A 999 display indicates good batteries. Any lower reading indicates batteries should be replaced.

SPECIFICATIONS

Display	Three digit LED display reads breakdown voltage directly, 000-999
Accuracy	± 2% of full scale typically over operating temperature range and battery life ± 4% of full scale guaranteed over operating temperature range and battery life
Operating Temperature	0°F to 110°F, at less than 95% RH
Storage Temperature	−30°F to 140°F
Batteries	Four alkaline AA cells
Battery Life	Typically 50,000 operations—depends on operating temperature and time display is held on
Case	ABS plastic, nominally 3″ wide, 1½″ deep, and 5½″ long
Test Leads	18″ long nominally, red positive
Weight	10 oz., nominally

ORDERING REFERENCE: 39-0001-10

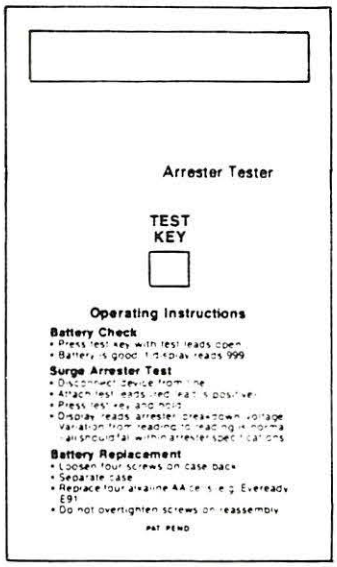

FRONT PANEL DETAIL

WESTERN-CULLEN-HAYES, Inc.
2700 West 36th Place • Chicago, Illinois 60632

LOW MAINTENANCE FIBERGLASS

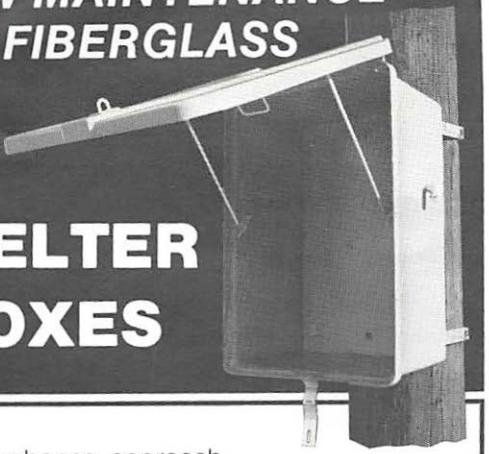

SHELTER BOXES

- For telephones, approach locations, etc.
  - 1/8" or 1/4" wall thickness
- Requires no painting
  - Door acts as rain shield
    - Mounts on pipe or pole

Call or write for more information

WC Hayes

WESTERN-CULLEN-HAYES, Inc.
2700 West 36th Place • Chicago, IL 60632-1682
Telephone: 312/254-9600 • Telex 25-3206

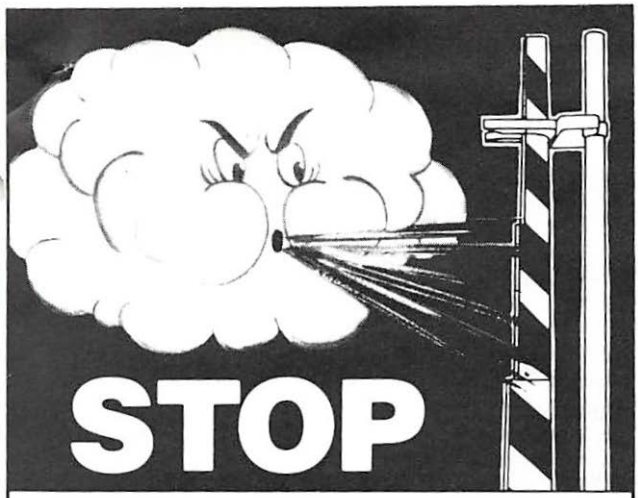

BLOW–DOWNS of fiberglass and aluminum gate arms

W-C-H High Wind Gate Arm Support

- Two Types
  4" mast: 3565-180-1
  5" mast: 3565-180
- Lock Bolt resists support turning on mast
- Non-binding design
- Wide receiving angle
- Adjustable

Call or write:

WESTERN-CULLEN-HAYES, Inc.
2700 West 36th Place • Chicago, Illinois 60632
Telephone: 1 312 254-9600 • Telex 25-3206

One dependable source for quality grade crossing components

W-C Hayes

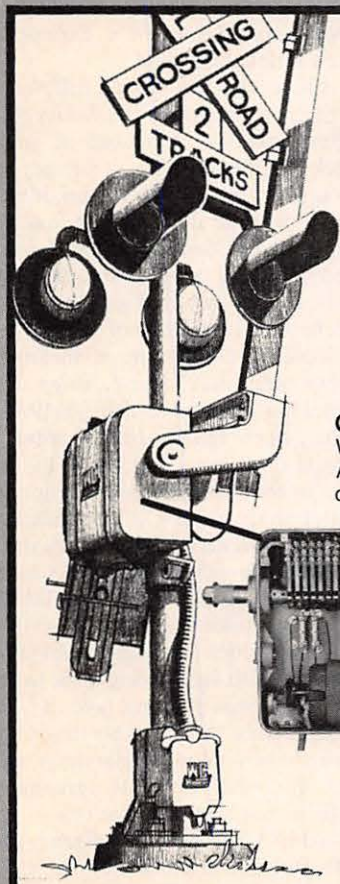

LIGHTS
8⅜" and 12"

ROUNDELS
To meet various requirements for 8⅜" and 12" Lights

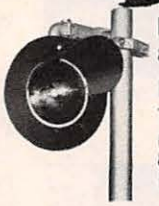

SIGNS
Cross Buck
No. of Track
Advance Warning Sign

GATE LIGHTS
1590—Fresnel Lens
1591—4" Circular Lens
1592—7" Circular Lens

CASE WIRING HARDWARE
Terminal Blocks and Resistance Units

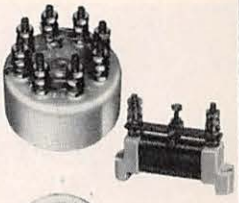

GATE ARMS
Wooden, Fiberglass
Aluminum/Fiberglass combination

HIGHWAY/ RR BELLS

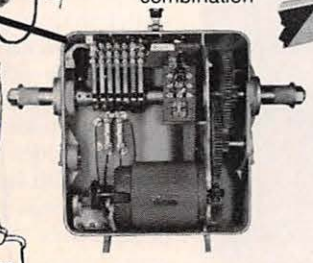

3590 SERIES GATE MECHANISM

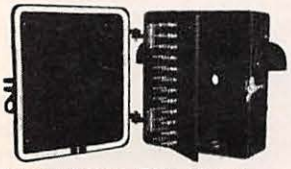

TERMINAL BOXES
Fiberglass Battery Boxes, Pole Mount Instrument Cases, Pole Mount Terminal and Arrester Boxes

OTHER W-C-H SIGNAL SUPPORT STRUCTURES
Walkout Cantilevers
Rotatable Cantilever Signal Bridges— Standard or Custom designs
Flashing Light Signals— Standard of the industry for many years

OTHER PRODUCTS
Lighting Transformers, Rectifiers, Lightning Arresters, Test Instruments, Rail Bonding Drills and Bits, Track Drills and Bits

Over 80 years of experience in highway-crossing equipment and a solid reputation for dependable quality products in the field are only two of the *many* important reasons for selecting Western-Cullen-Hayes as your source for signal products. A W-C-H Sales Engineer will be pleased to give you more information. Call 312/254-9600 or write:

W-C Hayes

WESTERN-CULLEN-HAYES, Inc.
2700 West 36th Place • Chicago, Illinois 60632
Telephone: 312/254-9600 • Telex 25-3206

MEMBER RPI RAILWAY PROGRESS INSTITUTE

80-1

Write in 949 on Reader Service Card

TEST SET PLUS

Model 202F SIGNAL TEST SET

PRECISION NUMERICAL READOUT PLUS...

- Flashing Arrow Indication when relay picks and drops
- Choice of low-current LCD or LED (for severe cold environments) readouts
- Automatic turnoff of internal batteries
- Lightest weight, most compact 202 Test Set

Standardize test procedures. Satisfy the requirements of the Signal Inspection Act with state-of-the-art technology. Characteristics of all D.C. signal apparatus can be readily determined with W-C-H Model 202F Signal Test Set.

MEMBER RPI

Call 312/254-9600
or write for complete information

WESTERN-CULLEN-HAYES, Inc.
2700 West 36th Place • Chicago, Illinois 60632
Telex 25-3206

WC Hayes

Write in 17 on Reader Service Card

Protection with control

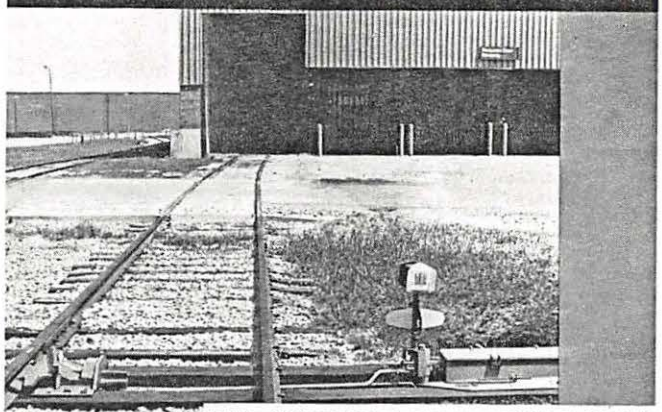

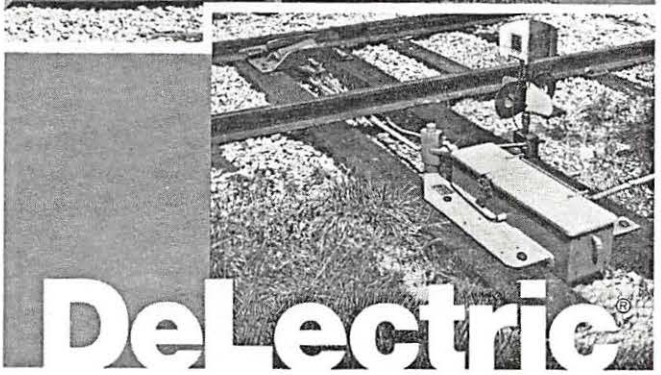

DeLectric®

a power Derail Operator Controlled Remotely

FRA and OSHA require derail protection. Provide it without adding to the workload of the individuals being protected. Equip your derail with a DeLectric® Derail Operator.

Internal contact closures permit varied control systems. Overhead doors can be interlocked. Work area warning systems, and train control signals can be turned on and off automatically.

- **Saves time, money**
- **Rugged, proven**

Can be used with the unique Automatic Mechanical Blue Flag or Power Blue Flag units.

MEMBER RPI

Call 312-254-9600 or Contact your Western-Cullen-Hayes representative for details.

WESTERN-CULLEN-HAYES, Inc.
2700 West 36th Place • Chicago, Illinois 60632
Telex 25-3206

WC Hayes

Write in 31 on Reader Service Card

TEST SET PLUS

RA 10/11/82

Model 202F SIGNAL TEST SET

PRECISION NUMERICAL READOUT PLUS...

- Flashing Arrow Indication when relay picks and drops
- Choice of low-current LCD or LED (for severe cold environments) readouts
- Automatic turnoff of internal batteries
- Lightest weight, most compact 202 Test Set

Standardize test procedures. Satisfy the requirements of the Signal Inspection Act with state-of-the-art technology. Characteristics of all D.C. signal apparatus can be readily determined with W-C-H Model 202F Signal Test Set.

MEMBER RPI

Call 312/254-9600
or write for complete information

WESTERN-CULLEN-HAYES, Inc.
2700 West 36th Place • Chicago, Illinois 60632
Telex 25-3206

WC Hayes

Write in 17 on Reader Service Card

ALDON PRODUCTS for RAILROAD OPERATION

Aldon products are designed for increased safety in locomotive & car and track applications. All items are quality constructed for long life service. Make Aldon your one stop shop for all your needs.

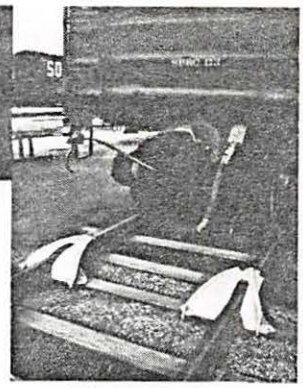

CAR & LOCOMOTIVE REPLACERS

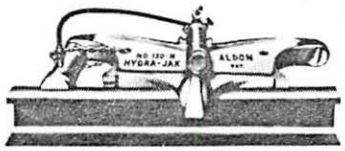

Hydraulic and Jack Type
RAIL BENDERS

TRACK LEVELS and GAUGES

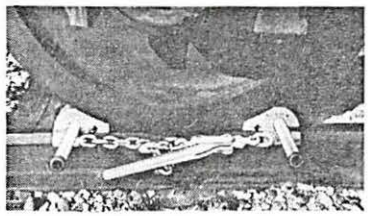

WHEEL CHOCKS

Self-Tightening CAR STOPS

Write for complete catalog of RR tools

Serving the Railroads since 1904

The Aldon Co
3410 Sunset Avenue, Waukegan, Illinois 60087
Dept. RA 312/623-8800

Write in 19 on Reader Service Card

The Kinergy Trackside Shaker makes frozen coal flow like water from rail cars

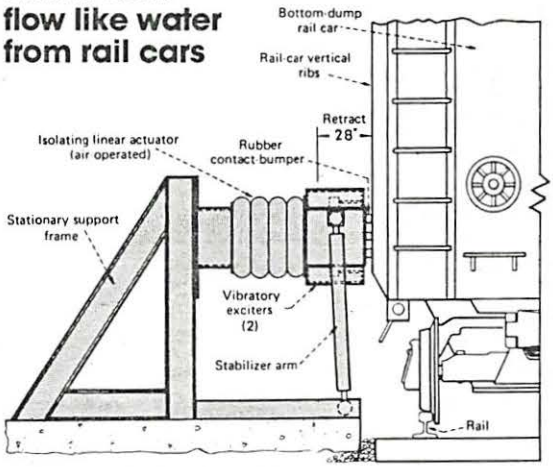

Discharges in Minutes, Cuts Noise Level Drastically

Phone in an order before the snow flies and the "Ice Man Cometh." Approximate delivery time, 10 weeks. Phone 502/964-5901. For complete details send in coupon.

Name _____

Company _____

Address _____

City _____ State _____ Zip _____

Kinergy Corp, 4821 Jennings Lane, Louisville, Ky. 40218

Write in 18 on Reader Service Card

One dependable source for quality grade crossing components

WC Hayes

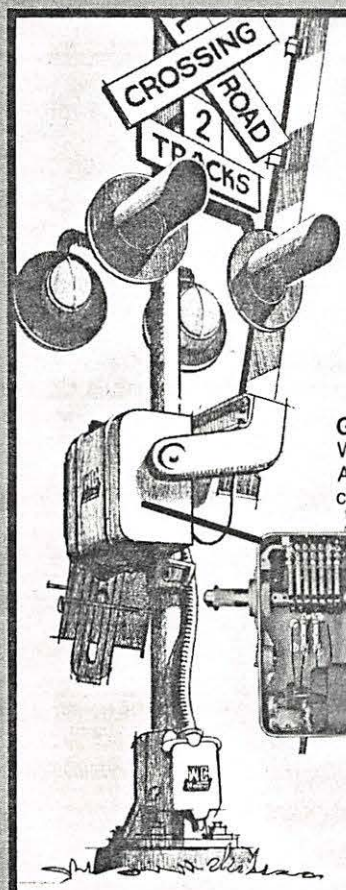

LIGHTS
8⅜" and 12"

ROUNDELS
To meet various requirements for 8⅜" and 12" Lights

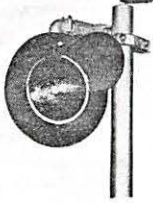

SIGNS
Cross Buck
No. of Track
Advance Warning Sign

GATE LIGHTS
1590—Fresnel Lens
1591—4" Circular Lens
1592—7" Circular Lens

CASE WIRING HARDWARE
Terminal Blocks and Resistance Units

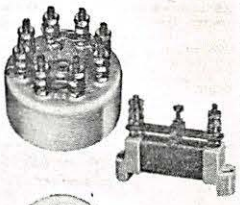

GATE ARMS
Wooden, Fiberglass
Aluminum/Fiberglass combination

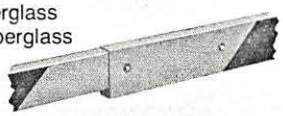

HIGHWAY/ RR BELLS

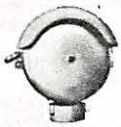

3590 SERIES GATE MECHANISM

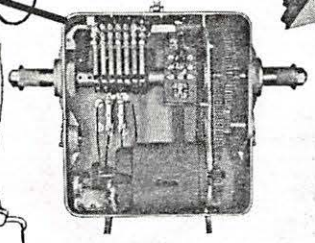

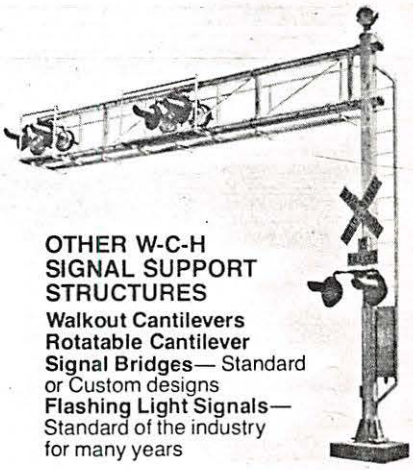

TERMINAL BOXES
Fiberglass Battery Boxes, Pole Mount Instrument Cases, Pole Mount Terminal and Arrester Boxes

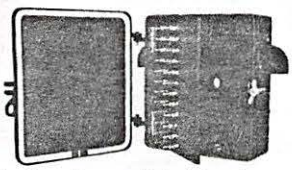

OTHER W-C-H SIGNAL SUPPORT STRUCTURES
Walkout Cantilevers
Rotatable Cantilever Signal Bridges— Standard or Custom designs
Flashing Light Signals— Standard of the industry for many years

OTHER PRODUCTS
Lighting Transformers, Rectifiers, Lightning Arresters, Test Instruments, Rail Bonding Drills and Bits, Track Drills and Bits

Over 80 years of experience in highway-crossing equipment and a solid reputation for dependable quality products in the field are only two of the *many* important reasons for selecting Western-Cullen-Hayes as your source for signal products. A W-C-H Sales Engineer will be pleased to give you more information. Call 312/254-9600 or write:

WC Hayes

WESTERN-CULLEN-HAYES, Inc.
2700 West 36th Place • Chicago, Illinois 60632
Telephone: 312/254-9600 • Telex 25-3206

MEMBER RPI RAILWAY PROGRESS INSTITUTE

80-1

Write in 949 on Reader Service Card

Make Accurate Field or Laboratory Tests Quickly, Easily

Shipments from Stock

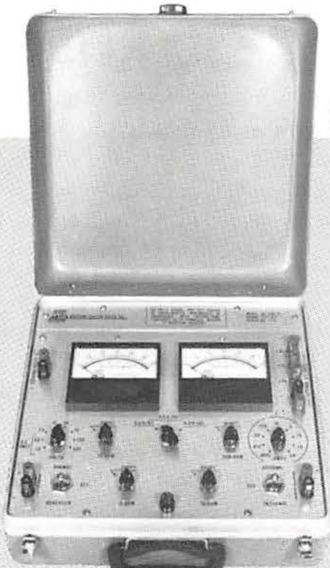

W-C-H 202-E Signal TEST SET

- **Help determine pick-up, release, contact resistance, D.C. or A.C. voltages and D.C. currents up to 30 Amps**
- **Voltage and current readings can be made on D.C. signal apparatus with only two leads connected to the device under test**
- **Torque tests on semaphore signals can be made using external battery**
- **Check motor current consumption and the operating characteristics of hold-clear device on crossing gate mechanisms**
- **Check switch machine overload relay**

Enables you to satisfy requirement of Signal Inspection Act in the field and laboratory quickly and easily. Characteristics of all D.C. signal apparatus can be readily determined with the W-C-H Model 202E Signal Test Set. Polarity changes and voltage readings are accomplished by switches, fixed resistances, potentiometer and rheostat conveniently located on the panel. Unit has self-contained battery.

MEMBER RPI

Call 312-254-9600 or
Contact your Western-Cullen-Hayes representative for details.

WESTERN-CULLEN-HAYES, Inc.
2700 West 36th Place • Chicago, Illinois 60632
Telex 25-3206

WC Hayes

See us at **Booth 324 & 326 AAR C&S,** Washington, DC

Orderin… Be Ca…

By Esther Pet…

There is no doubt that increased are prompting consumers to try thei… merchandise through the mail. After a … often economical, and rather exciting ev… of gasoline is not a factor. But at the sa… complaints about mail order purchases … matically.

According to the Council of Better Business Bureaus, Inc. (CBBB), mail order problems have been at the top of the Better Business Bureaus' complaint list for many years. Bankruptcy was mentioned as one of the reasons for the increase in mail order complaints, but CBBB says "sources within the industry tell us a major factor may be that some marginal companies are caught in a cost bind brought on by inflation. With increases in costs for almost everything, including postage, printing of catalogs and other advertising materials, plus the cost of goods, some companies have cut back on inventories...and can't always readily fill incoming orders." Cutbacks in personnel also aggravated the situation.

For these and other reasons, the Federal Trade Commission (FTC) has a four-year-old rule that protects you against many mail order headaches and provides that:

- You must receive the merchandise when the seller says you will.
- If you are not promised delivery within a certain time period, the seller must ship the merchandise to you no later than 30 days after your order comes in.
- If you don't receive it shortly after that 30-day period, you can cancel your order and get your money back.

So much for the normal irritations associated with ethical mail order businesses. The U.S. Postal Service (USPS) has a far more serious problem with mail order rip-off artists who cost consumers an average of half a billion dollars a year through mail fraud and misrepresentation of products, services and investments offered by mail.

According to USPS, which has recently announced a crackdow… on fraudulent advertising, th… rip-off artists have swindled … Americans of life savings b… suading them to invest i…

tionable bus…
include selli…
dollars in "…
packages" a…
nities; clai…
weight loss …
more fat eac…
ran 14 mile…
worthless l…
near oil pro…
tors, retire…
have also …
corresponde…
ing fabulous…
and have us…
tising and d…
magical poti…
teed to incre…
IQ, sexual p…

To protec…
seductive sc…
Inspection …
to be notifi…
some mail …
true, but of…
to those wh…
accept some…
fers:

- Exerci… your impuls…
- Questi… tigate befor…
- Read … tracts — a… signing any…
- Check … Business … Commerce…
- Save … al received…

Finally, … been the … scheme, … pertine… Postal … sumer… of yo…

F…
Sh…
t…

WESTERN-CULLEN-HAYES, Inc.
2700 West 36th Place • Chicago, Illinois 60632 • Telephone: 312/254-9600 • Telex 25-3206

Thank you for your recent inquiry concerning the Western-Cullen-Hayes Wheel Crowder. Please find enclosed a brochure detailing this product.

As the ad suggests, there are locations where a derail by itself may not be enough to provide proper derail protection. Using a Wheel Crowder to augment the derail will give added assurance of a positive derailment.

Wheel Crowders can be used with Hayes Model EB, EBF, HB or HBP Derails. Also, they can be added to any such derail presently in service. Simply specify the type, size and derailing direction of the derail with which you want the Wheel Crowder to work.

A Wheel Crowder is not required with every derail installed, but it can certainly improve the reliability of derail protection at selected locations. We invite your further inquiry.

Yours truly,

Jon P. Schaefer
Sales Manager

JPS:ga

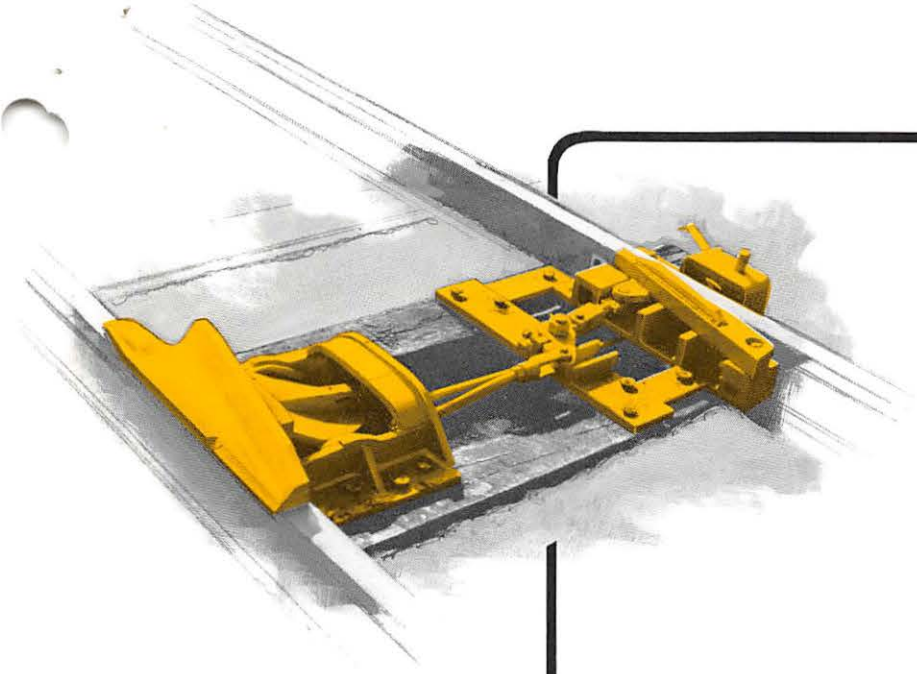

W-C-H DERAIL
WHEEL CROWDER

U.S. Patent No. 3944174

Provides positive, safer derail operation

- **Assists Derails by pushing, shoving or crowding the wheels into the throat or entering toe of the derail.**
- **Satisfies OSHA Requirements**
- **Significantly lower in cost than switch-point and stock rail type derails.**
- **Economical 2 man installation.**
- **Hand or electrical operation.**

Properly installed, the WCH Derail Wheel Crowder provides more positive derailments. It is particularly helpful when derails are installed on the inside rail of curves, on grades descending toward main tracks, and at one-spot car-repair shops and on all industry tracks. Maintains stronger track structure at derail location. Two man installation requires approximately two hours. Snow and ice removal is easy.

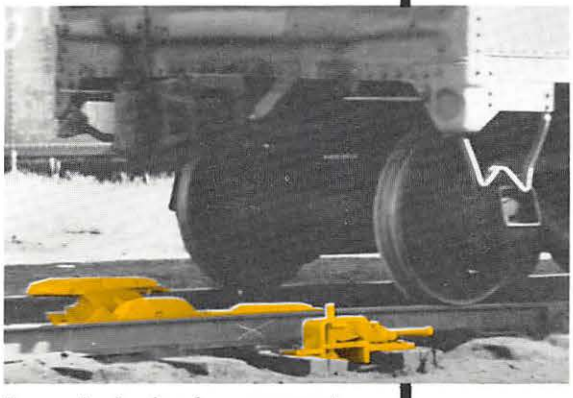

Forward wheels of car approach derail. Wheel Crowder on near rail will push opposite wheel into the derail.

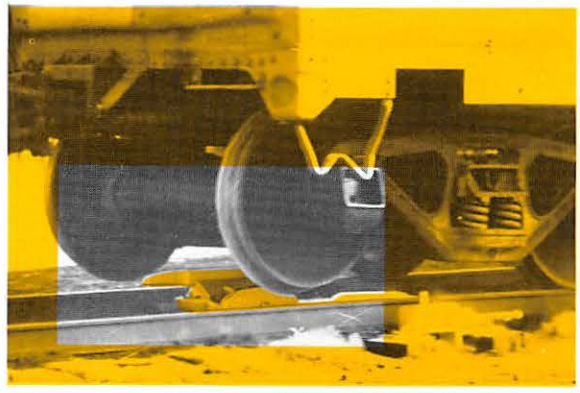

Near wheel has been pushed to right by Crowder and right wheel has been raised into clear by the derail.

WESTERN-CULLEN-HAYES, Inc.
2700 West 36th Place • Chicago, Illinois 60632
Telephone: 1 312 254-9600 • Telex 25-3206

W-C-H DERAIL
WHEEL CROWDER
WORKS WITH EXISTING HB, EB TYPE DERAILS

Fits only Model EB Hinge Derail and Model HB Sliding Derail. Can be added to existing installations of these derails. Note: MUST NOT BE USED WITH Double End Derails.

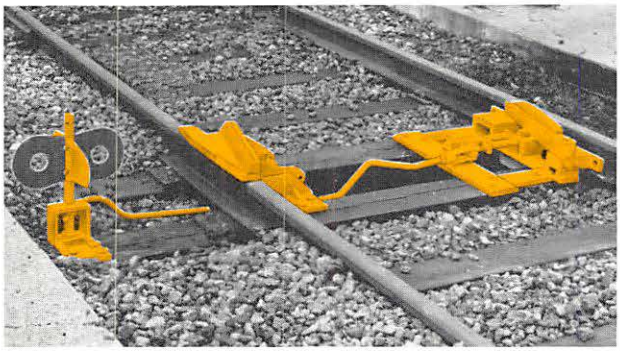

WCH Derail Crowder used with Model EB hinge type Derail

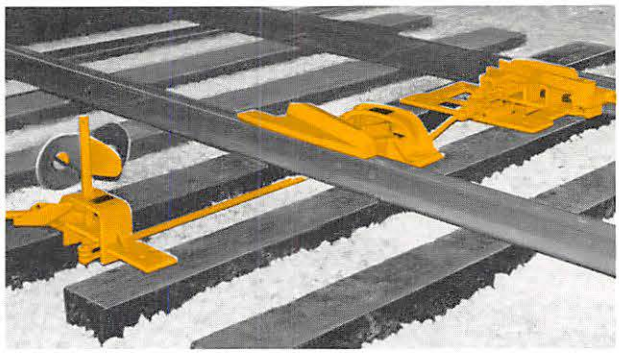

WCH Derail Crowder used with Model HB sliding Derail

In new installations, combined Derail Crowder and EB or HB Derail can be installed on side of rail. Crowder has "trail through" feature.

Derail Crowder will be furnished to fit the specified derail.

Shipping Wt. 266# Crowder
266# Derail

Operation can be manual or by remote electrical control.

INSTALLATION INSTRUCTIONS

Install Derail Wheel Crowder and Derail using non-deformed rail, spiked to sound ties following installation instructions packed with each Derail. Can be spiked or installed with lag screws.

ORDERING INSTRUCTIONS

Determine style and size of existing derail (or new derail when required): Indicate style: HB, HBP or EB. Specify size 4, 5, 6, 7, or 8, right or left hand.

Weight of Rails: _____

Thickness of the Plates if Used: _____

EXAMPLE

DERAIL—HB, Right Hand, 115# Rail, 6⅝" High, plus ¾" tie plate for total height of 7⅜". Order Size 7 HB Right Hand Derail and Crowder.
F.O.B. Richmond, Indiana

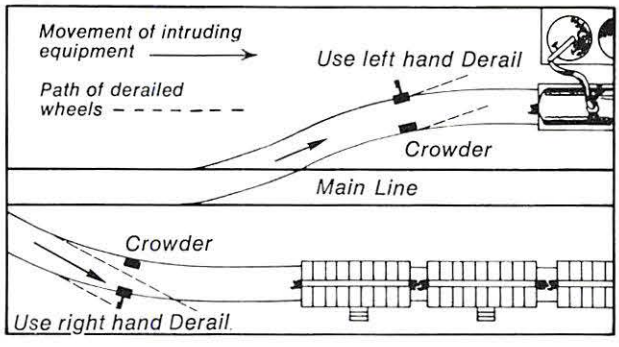

Printed in U.S.A.

M5M 983

WESTERN-CULLEN-HAYES, Inc.
2700 West 36th Place • Chicago, Illinois 60632

Don't Trust Your Expensive CONTROL APPARATUS

DERAIL

WESTERN-CULLEN-HAYES

model "TS" PORTABLE DERAIL

Complies with F.R.A. REGULATIONS

- Can be padlocked in the derailing position
- Can be padlocked to prevent unauthorized application
- Resists sliding —unique design holds derail securely to rail
- Lightweight—easy to handle
- Rugged—fabricated from high strength low alloy steel
- Easy to install—requires no special tools

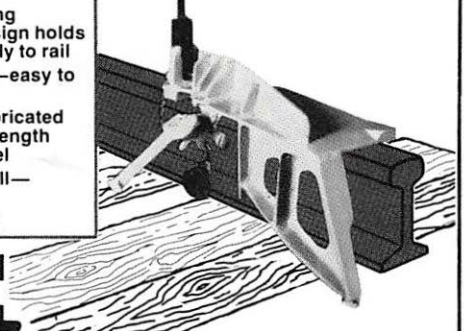

WC Hayes

Call 317/962-0526 for complete information on how this safety device can benefit you.

WESTERN-CULLEN-HAYES, Inc.

120 N. 3rd Street • P.O. Box 756 • Richmond, Indiana 47374

Telephone: 317/962-0526

Write 26 on Reader Service Card

Protection with control

DeLectric®

a power Derail Operator Controlled Remotely

FRA and OSHA require derail protection. Provide it without adding to the workload of the individuals being protected. Equip your derail with a DeLectric® Derail Operator.

WC Hayes

Call or write:

MEMBER RPI

WESTERN-CULLEN-HAYES, Inc.
2700 West 36th Place • Chicago, Illinois 60632
Telephone: 1 312 254-9600 • Telex 25-3206

Don't Trust Your Expensive CONTROL APPARATUS To A $10.00 Lightning Arrester

After lightning strikes make certain your arrester still works

Use a W-C-H

SURGE ARRESTER TESTER

Reads True Breakdown Voltage

- Tester non-destructive to arresters
- Clearly visible LED display
- 3 digit accuracy
- Small, lightweight, (easily hand-held pocket carried)
- Extremely long battery life

WC Hayes

Call 1 312 254-9600

WESTERN-CULLEN-HAYES, Inc.
2700 West 36th Place • Chicago, Illinois 60632-1682
Telephone: 1 312 254-9600 • Telex: 25-3206

Write in 21 on Reader Service Card

DERAIL

WESTERN-CULLEN-HAYES

model "TS" PORTABLE DERAIL

Complies with F.R.A. REGULATIONS

- Can be padlocked in the derailing position
- Can be padlocked to prevent unauthorized application
- Resists sliding —unique design holds derail securely to rail
- Lightweight—easy to handle
- Rugged—fabricated from high strength low alloy steel
- Easy to install—requires no special tools

WC Hayes

Call 317/962-0526 for complete information on how this safety device can benefit you.

WESTERN-CULLEN-HAYES, Inc.

120 N. 3rd Street • P.O. Box 756 • Richmond, Indiana 47374

Telephone: 317/962-0526

Write 26 on Reader Service Card

RELAYS

Series 50 Motor Control Relays

- Available from Stock
- Safety-grade Design Concepts and Workmanship
- Meet or Exceed All Requirements of AAR Manual Part 101 (6.1.2)
- 2 FB HD Contact Configuration
- Relays for All Current W-C-H and Discontinued WRRS (Model 10) Mechanisms

MECH.	RELAY PART NO.	COIL RESISTANCE
3564	38-0050-300-1	160 OHM
3566	38-0050-400-1	280 OHM
3567	38-0050-400-1	280 OHM
3590	38-0050-200-1	1000 OHM
3593	38-0050-200-1	1000 OHM

Call or write:

WESTERN-CULLEN-HAYES, Inc.
2700 West 36th Place • Chicago, Illinois 60632
Telephone: 1 312 254-9600 • Telex 25-3206

- Gate Arm Pumping
- Contact Adjustment Problems
- Excess Contact Burn

with your Type 3567 and/or GRS Type "D" Gate Mechanisms

Try the W-C-H Cam Retro-fit Kit, PN: 3567-250, featuring our patented, slide-action cam design. It solves these problems inexpensively.

Call or write:

WESTERN-CULLEN-HAYES, Inc.
2700 West 36th Place • Chicago, Illinois 60632
Telephone: 1 312 254-9600 • Telex 25-3206

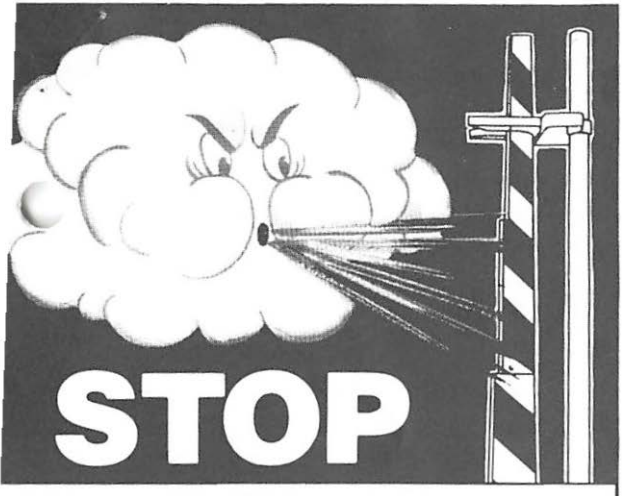

BLOW–DOWNS of fiberglass and aluminum gate arms

W-C-H High Wind Gate Arm Support

Two Types
" mast: 3565-180-1
mast: 3565-180

- Lock Bolt resists support turning on mast
- Non-binding design
- Wide receiving angle
- Adjustable

Call or write:

WESTERN-CULLEN-HAYES, Inc.
2700 West 36th Place • Chicago, Illinois 60632
Telephone: 1 312 254-9600 • Telex 25-3206

Built Like A Tank!

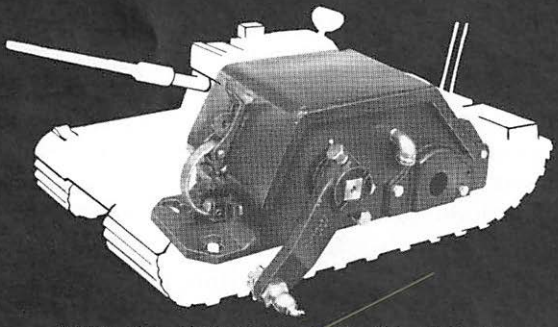

W-C-H Model 100
CIRCUIT CONTROLLER

TOUGH TO BREAK • EASY TO REPAIR

- Fabricated housing made from 3/8" steel plate
- Contact closures, configurations meet requirements of AAR Manual Part 12.1.1
- Full line of accessories
  Point Detector Lugs • Ball Sockets
  Connecting Rods
- Mounting holes match all current four-cam controllers

WC Hayes

WESTERN-CULLEN-HAYES, Inc.
2700 West 36th Place • Chicago, IL 60632-1682
Telephone 312/254-9600 • Telex 25-3206

WESTERN-CULLEN-HAYES

HD-350E

Bonding Drill

Does a Special Job, Especially Well

- Rugged—built to last
- Fast, firm mounting to rail
- Drills Head or Web
- Works on new or badly worn rail

Accurate. Controls depth of hole automatically.

Call or write:

WESTERN-CULLEN-HAYES, Inc.
2700 West 36th Place • Chicago, Illinois 60632
Telephone: 312/254-9600 • Telex 25-3206

WATCH THE SIGNALS

These were the very latest in signal devices back in 1900, according to the General Railway Signal Co. The enclosed disc home and distant signal was installed for the Reading Railroad, near Park Junction, Pa., by the Hall Signal Co. Today, the Reading Railroad is defunct and most signal devices are electronic marvels.

make life easier for yourself

PROTECTION IN A CAN

Maintenance aids in stock at WESTERN-CULLEN-HAYES meet applicable AAR Signal Division requisites

Sealing Compounds
Cold Application: WL-640 (1 gal.)
Signal Cement, Gray: 7202 (1 gal.)
Signal Cement, Black: 7209 (1 gal.)

Cable Paint
Victolac Universal Black: 12Q (1 gal.)

Gear Grease
Low Temperature, Reduced Splatter: 3590-1650 (1 qt.)

Rust and Corrosion Inhibitor
*No-Ox-Id "E": 970-145 (1 gal.)

Aluminum Thread Lube
Reduce Cross-Threading: 970-144 (1 qt.)

*Genuine Brand NO-OX-ID "E".

WC Hayes

Call or write:

WESTERN-CULLEN-HAYES, Inc.
2700 West 36th Place • Chicago, Illinois 60632
Telephone: 312/254-9600 • Telex 25-3206

W-C-H Fiberglass GATE ARMS

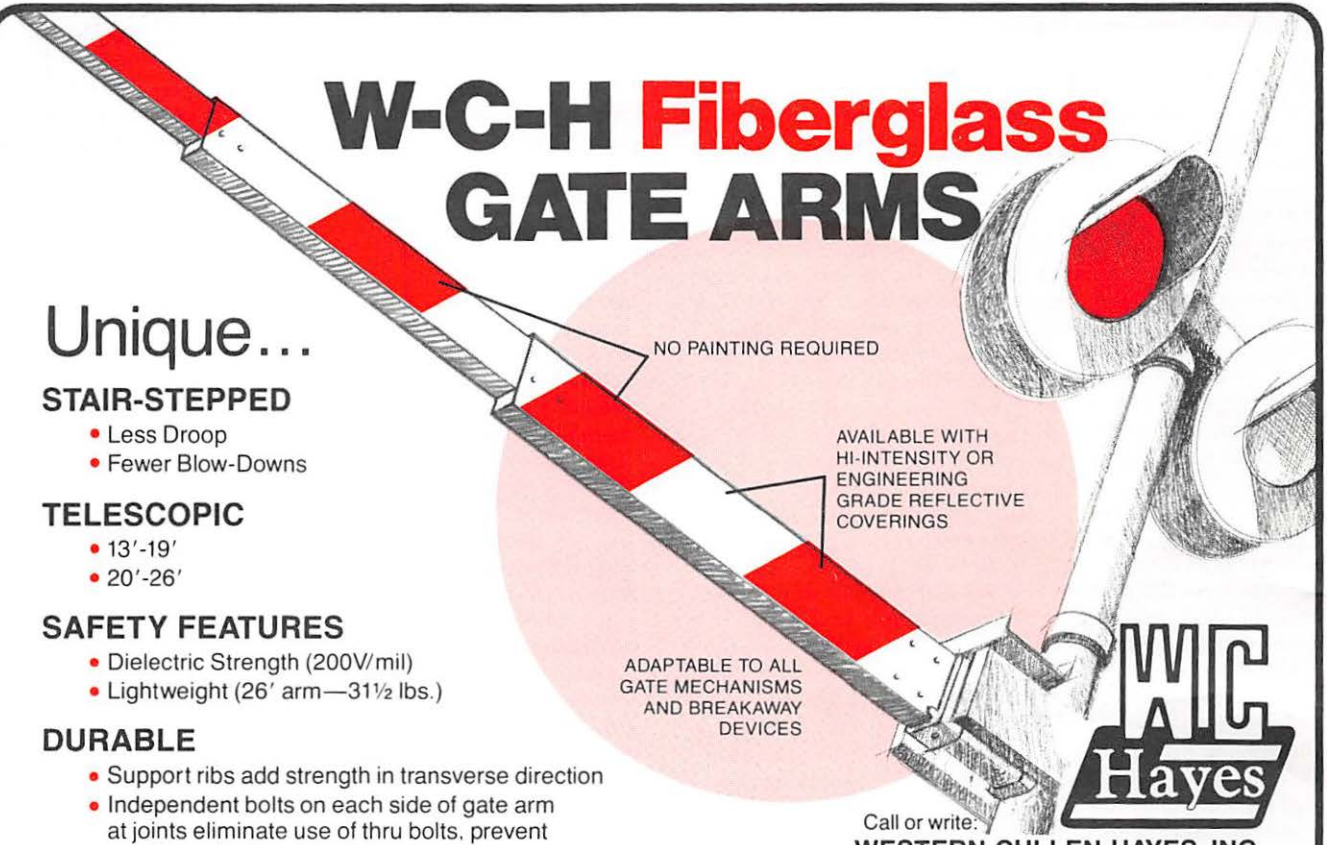

Unique...

STAIR-STEPPED
- Less Droop
- Fewer Blow-Downs

TELESCOPIC
- 13′-19′
- 20′-26′

SAFETY FEATURES
- Dielectric Strength (200V/mil)
- Lightweight (26′ arm—31½ lbs.)

DURABLE
- Support ribs add strength in transverse direction
- Independent bolts on each side of gate arm at joints eliminate use of thru bolts, prevent crushing of arm

WC Hayes

Call or write:
WESTERN-CULLEN-HAYES, INC.
2700 West 36th Place, Chicago, Illinois 60632
312/254-9600

TEST SET PLUS

Model 202F SIGNAL TEST SET

PRECISION NUMERICAL READOUT PLUS...

- **Flashing Arrow Indication when relay picks and drops**
- **Choice of low-current LCD or LED (for severe cold environments) readouts**
- **Automatic turnoff of internal batteries**
- **Lightest weight, most compact 202 Test Set**

Standardize test procedures. Satisfy the requirements of the Signal Inspection Act with state-of-the-art technology. Characteristics of all D.C. signal apparatus can be readily determined with W-C-H Model 202F Signal Test Set.

MEMBER RPI

Call 312/254-9600
or write for complete information

WESTERN-CULLEN-HAYES, Inc.
2700 West 36th Place • Chicago, Illinois 60632
Telex 25-3206

WC Hayes

MELCHER:

In a Republican-controlled Senate noteworthy in 1981-82 for giving a helping hand to the rich and the corporations and the back of its hand to workers and the needy, a few outnumbered Senators fought courageously to protect the well-being of our members, our families and our union.

The Enemies He Makes

Sen. John Melcher is a priority target on the "hit list" of the anti-union National Conservative Political Action Committee. In addition, the National Right to Work (for less) Committee wants him out of the Senate. So do the U.S. Chamber of Commerce, the National Association of Manufacturers, scores of business and industry PACs, Big Oil and more than 20 union-hating right-wing PACs.

Among them, they're pouring thousands and thousands of dollars into Montana to defeat John Melcher.

You can tell a lot about an office-holder by the enemies he makes. So, if this bunch wants so badly to get John Melcher *out* of the Senate, it must be impor for us to fight to keep him *in* the Senate.

It is. Vote Melcher for U.S. Senate November 2.

Now, stock 1 Gate Arm that can fit ALL of your different breakaway adapters!

W-C-H UNIVERSAL GATE ARM

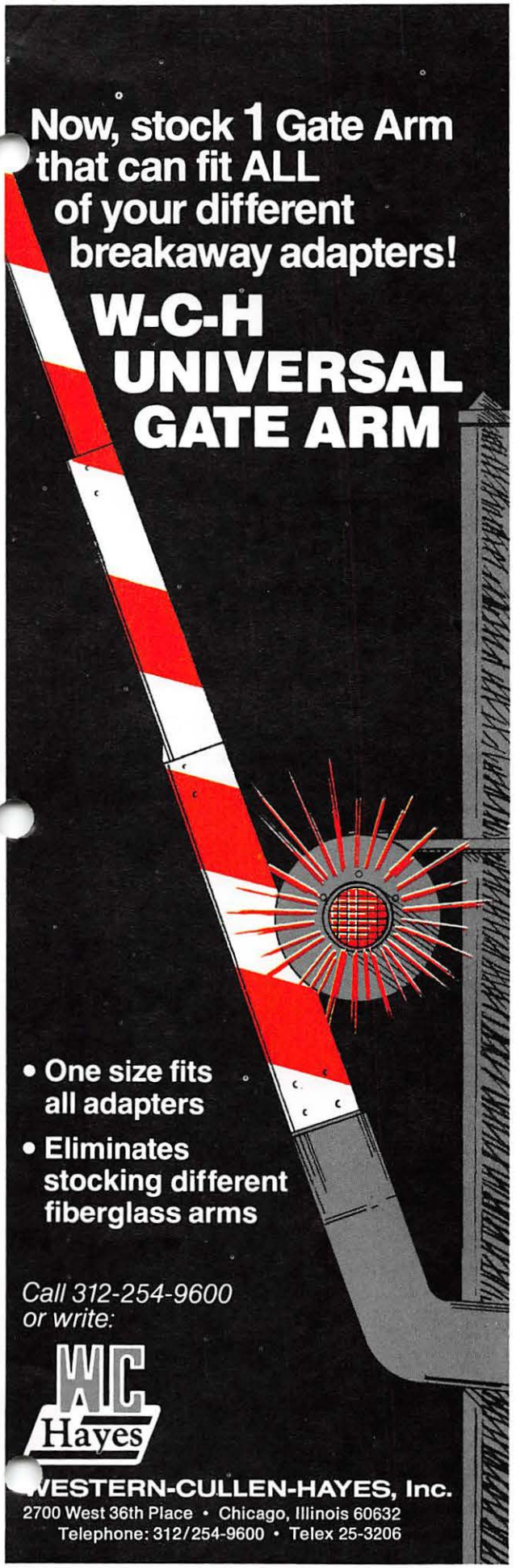

- One size fits all adapters
- Eliminates stocking different fiberglass arms

Call 312-254-9600 or write:

WC Hayes

WESTERN-CULLEN-HAYES, Inc.
2700 West 36th Place • Chicago, Illinois 60632
Telephone: 312/254-9600 • Telex 25-3206

REDUCE the COST of your signal system

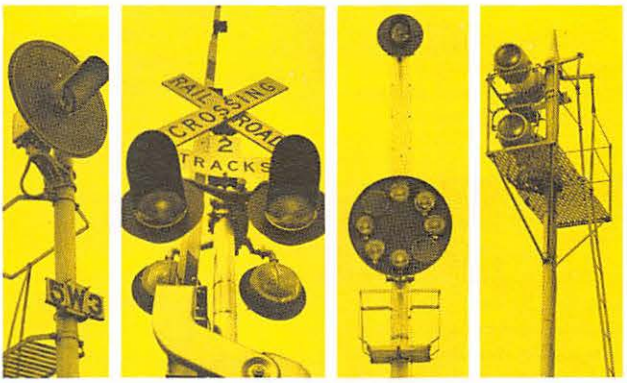

...with SOLID STATE FLASHER RELAYS THAT WORK!

PROVEN IN SERVICE

...Since 1972

MODEL 720

20 Amp capacity. Additional units can be connected in tandem. AC-DC operation. Adjustable flash rate.

...Since 1975

MODEL 705

5 Amp capacity. DC operation. Separate Rectifier available for AC operation.

WC Hayes

For additional information on W-C-H Products Call 312/254-9600 or write:

WESTERN-CULLEN-HAYES, Inc.
2700 West 36th Place, Chicago, IL 60632
Telex 25-3206

no matter how you say it...

Hayes DERAILS

or DERAILS Hayes

its a name synonymous with a railroad product since 1903

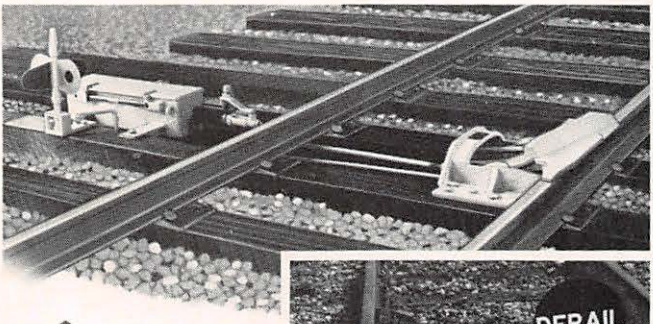

Electrically Interlocked Derails—remote controlled or manually operated.

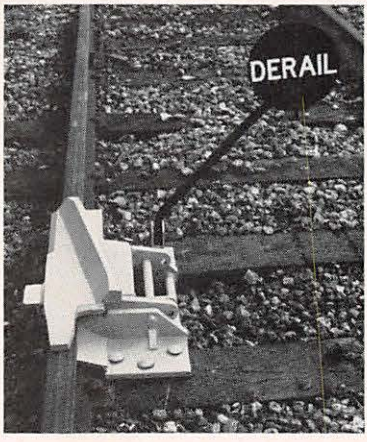

Hand-thrown Derails. Low cost, easily installed, single throw, 2-way. Variety of flags available.

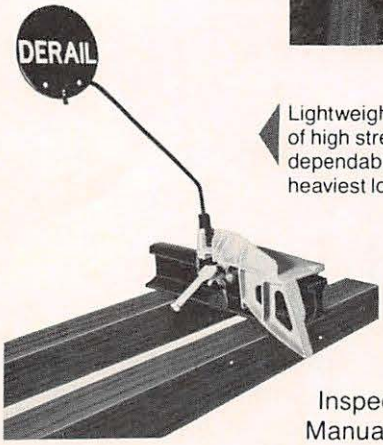

Lightweight Portable Derail made of high strength steel. A proven dependable product that can handle heaviest locomotives and cars.

A comprehensive "Derail Installation, Inspection and Maintenance" Manual is yours for the asking.

Call or write for more information.

WC Hayes

WESTERN-CULLEN-HAYES, Inc.
120 N. 3rd Street • P.O. Box 756 • Richmond, Indiana 47374
Telephone: 317/962-0526

Write in 10 on Reader Service Card

Protection with control

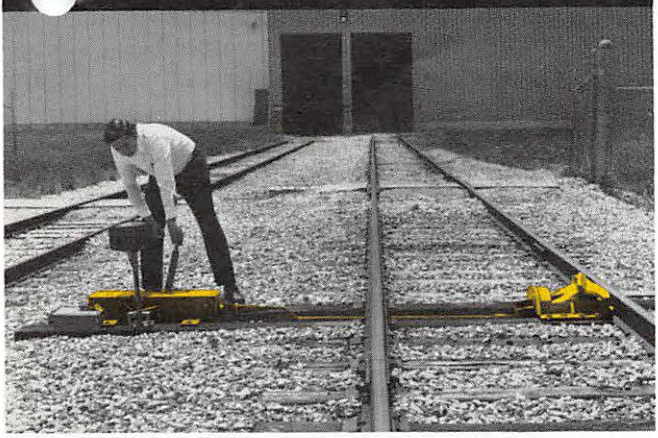

ELDO

a manual Derail Operator with an Electric Lock

ELDO (Electric Lock Derail Operator) puts control of a derail in the hands of the individuals being protected. ELDO's electric lock, controlled from the protected work area, prevents manual removal of the derail from the rail, until the people in the work area are ready to release it.

Control of work area warning systems can be circuited through ELDO. Contact closures are provided for derail position indications.

- **Compact, single-unit design**
- **Easy to install**
- **Simple to maintain**

ELDO provides the protection FRA and OSHA require, with added security and labor savings that come from a remotely controlled electric lock.

Call 312-254-9600 or Contact your Western-Cullen-Hayes representative for details.

MEMBER RPI

WC Hayes

WESTERN-CULLEN-HAYES, Inc.

2700 West 36th Place • Chicago, Illinois 60632
Telex 25-3206

Protection with control

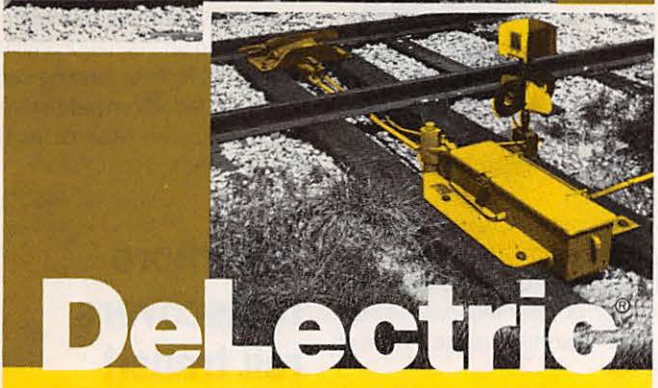

DeLectric®

a power Derail Operator Controlled Remotely

FRA and OSHA require derail protection. Provide it without adding to the workload of the individuals being protected. Equip your derail with a DeLectric® Derail Operator.

Internal contact closures permit varied control systems. Overhead doors can be interlocked. Work area warning systems, and train control signals can be turned on and off automatically.

- **Saves time, money**
- **Rugged, proven**

Can be used with the unique Automatic Mechanical Blue Flag or Power Blue Flag units.

MEMBER RPI RAILWAY PROGRESS INSTITUTE

Call 312-254-9600 or Contact your Western-Cullen-Hayes representative for details.

WESTERN-CULLEN-HAYES, Inc.
2700 West 36th Place • Chicago, Illinois 60632
Telex 25-3206

WC Hayes

Write in 45 on Reader Service Card

One dependable source for quality grade crossing components

WC Hayes

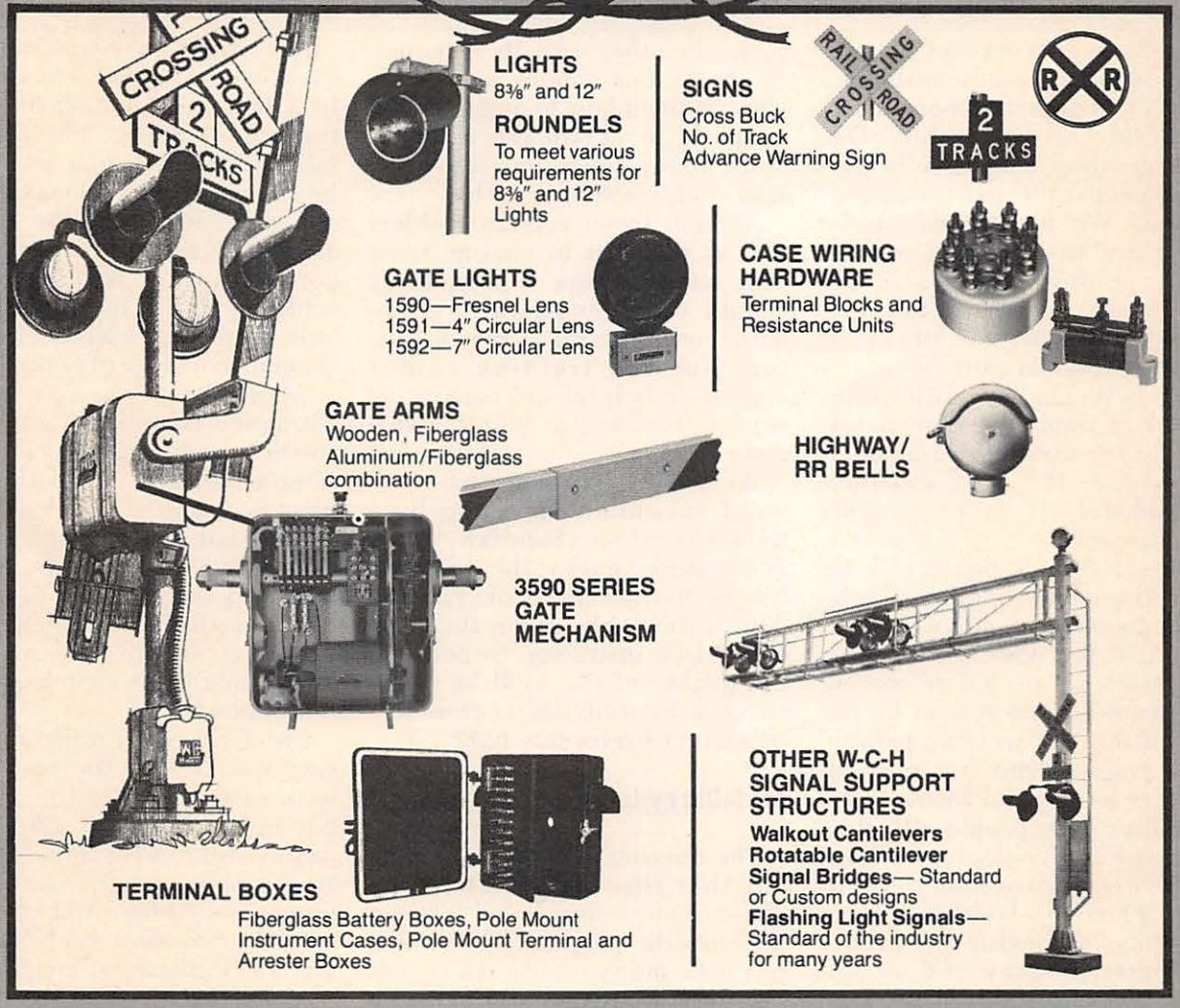

LIGHTS
8⅜" and 12"

ROUNDELS
To meet various requirements for 8⅜" and 12" Lights

SIGNS
Cross Buck
No. of Track
Advance Warning Sign

GATE LIGHTS
1590—Fresnel Lens
1591—4" Circular Lens
1592—7" Circular Lens

CASE WIRING HARDWARE
Terminal Blocks and Resistance Units

GATE ARMS
Wooden, Fiberglass
Aluminum/Fiberglass combination

HIGHWAY/ RR BELLS

3590 SERIES GATE MECHANISM

TERMINAL BOXES
Fiberglass Battery Boxes, Pole Mount Instrument Cases, Pole Mount Terminal and Arrester Boxes

OTHER W-C-H SIGNAL SUPPORT STRUCTURES
Walkout Cantilevers
Rotatable Cantilever
Signal Bridges— Standard or Custom designs
Flashing Light Signals— Standard of the industry for many years

OTHER PRODUCTS
Lighting Transformers, Rectifiers, Lightning Arresters, Test Instruments, Rail Bonding Drills and Bits, Track Drills and Bits

Over 80 years of experience in highway-crossing equipment and a solid reputation for dependable quality products in the field are only two of the *many* important reasons for selecting Western-Cullen-Hayes as your source for signal products. A W-C-H Sales Engineer will be pleased to give you more information. Call 312/254-9600 or write:

WC Hayes

WESTERN-CULLEN-HAYES, Inc.
2700 West 36th Place • Chicago, Illinois 60632
Telephone: 312/254-9600 • Telex 25-3206

MEMBER RPI RAILWAY PROGRESS INSTITUTE

80-1

Write 14 on Reader Service Card

Specify **WESTERN-CULLEN-HAYES**

WHEN YOU WANT **EXPERIENCE, QUALITY and DEPENDABILITY** IN TRACK AND MAINTENANCE-OF-WAY

Specialty Products & Accessories

Reflectorized Switch Lamps

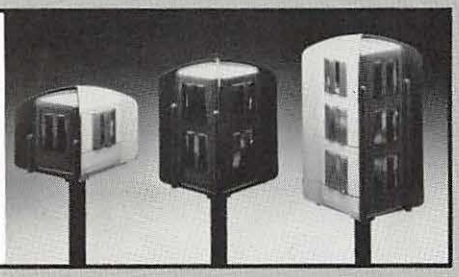

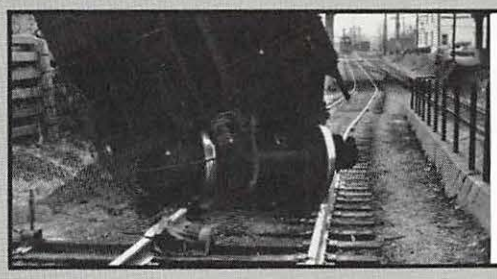

Hayes® Sliding HB Derail shown derailing car.

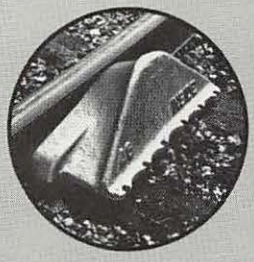

Camel Back Locomotive & Car Replacer

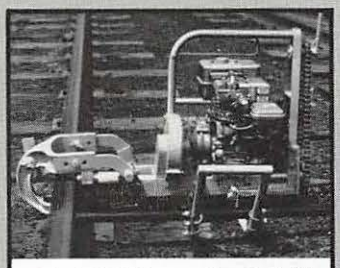

Model P Power Track Drill

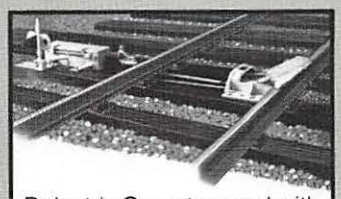

Delectric Operator used with HB Sliding Derail Available as door protection system

SG Wheel Stop

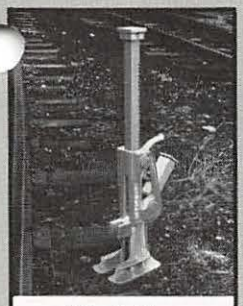

Klinch Klaw Ratchet Trip Jack

Compromise Joints

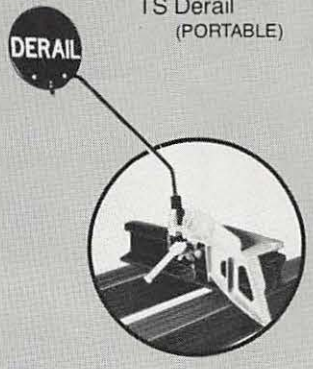

TS Derail (PORTABLE)

Burro® Anti-Slip Rail Tongs

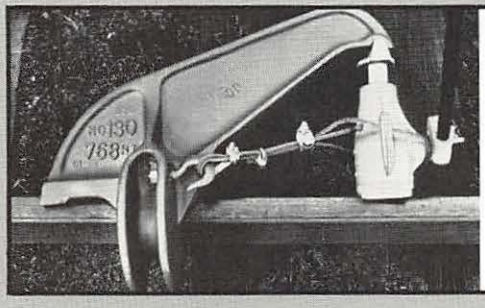

Jack Type Rail Bender

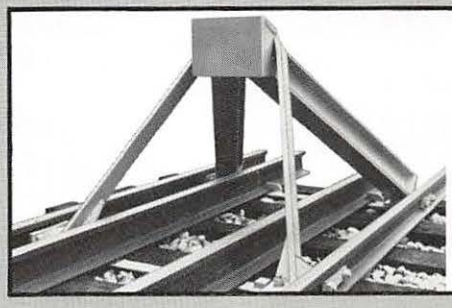

Bumping Post and Shock Free Head

OTHER W-C-H PRODUCTS:
TRACK LEVELS, GAUGES, SWITCH POINT GUARDS, LOCOMOTIVE BELLS, ROTATING LIGHTS.

OTHER W-C-H PRODUCTS:
DERAIL OPERATING STANDS • TARGETS
BLUE FLAGS • GAGE RODS

For Additional Information on W-C-H Products CALL 312-254-9600 or Write:

WESTERN-CULLEN-HAYES, Inc.
2700 West 36th Place • Chicago, Illinois 60632
Telex 25-3206

For Additional Information on W-C-H Products CALL 317-962-0526 or Write:

WESTERN-CULLEN-HAYES, Inc.
120 N. 3rd Street • P.O. Box 756 • Richmond, Indiana 47374

78-7

Write 2 on Reader Service Card

You'd Expect To Pay More For A Crossing Gate Signal With All These Added Improvements But you don't!

- **Expanded range of breakaway arms**—from 13′ to 33′ enhances maintenance capabilities.
- **Counterweight System**—Counterweights limited to 25 and 50 pounds. Easier to handle, more efficient. 1 man assembly for arms up to 33 feet.
- **Motor Control Relay**—Safety grade. Superior reliability. Higher current capacity.
- **Intermediate Gear Ring & Pinion**—splined and swedged for improved structural integrity.
- **Arc Suppressor**—for motor-up contact, reduces contact burn.
- **Ratchet Wheel Clutch**—furnished with stainless steel springs for improved service life. No lubrication required.

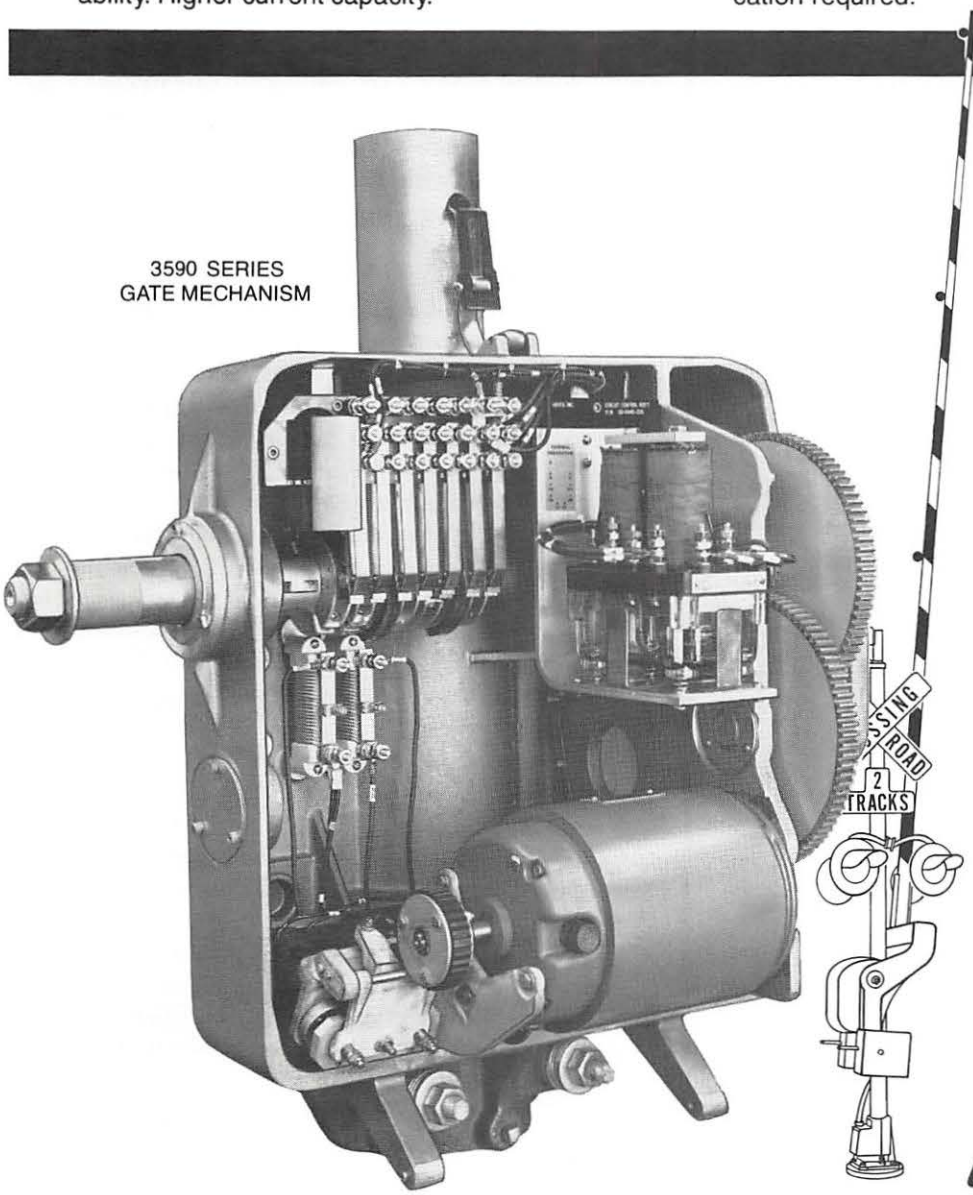

3590 SERIES
GATE MECHANISM

All these improvements have been added to the many other special and safety features designed and engineered into the W-C-H Model 10 Signal with 3590 Series Gate Mechanism. And the price has remained the same.

Other value-added features of the 3590 Series Mechanism, include "Flame Hardened" Carbon Steel Gear Teeth; Fast, Dependable Action—even when raising 44′ gate arms; a Patented "Slide Cam" that minimizes gate arm pumping and contact burning; and a Durable Cast Aluminum Case. In addition, a variety of internal wiring schemes are available which allow us to satisfy your specific application requirements. The result is a versatile sturdy, dependable unit that meets or exceeds AAR specifications.

Western-Cullen-Hayes is committed to satisfying the highway crossing signal needs of the railroad industry, we supply products that are distinctive for their proven performance, combining maximum reliability with minimum maintenance.

WC Hayes

WESTERN-CULLEN-HAYES, Inc.
2700 West 36th Place • Chicago, Illinois 60632
Telephone: 1 312 254-9600 • Telex 25-3206

P.O. Box U
Mt. Prospect, Il. 60056

For complete information call or write:

WESTERN-CULLEN-HAYES, Inc.
2700 West 36th Place • Chicago, IL 60632-1682
Telephone 312/254-9600 • Telex 25-3206

of time a locomotive operates in each throttle . can be used to evaluate the performance and pro of diesel locomotives. *Ogontz Corp., Willow Grove, . .*

For information circle **276**

The c saves horsep ity to that a *Comp*

Restraint System

The manufacturer has developed a restraint system for securing hazardous materials in drums for trailers or containers shipped by rail. The product is a 15-inch wide polyester fiber composite strip with a tensile strength of

W-C-H BLUE FLAGS

Style 2

Style 12

Style 4

Style 5

Style 9

Style 11

Power Operated
Remote Controlled

Blue Flags
Satisfy OSHA, FRA requirements

MANY TYPES

- Staff
- Clamp
- Locomotive Mount
- Derail Equipped
- Specials

Wide variety of flag styles available. Call 317 962-0526 or write for additional information.

WESTERN-CULLEN-HAYES, Inc.
120 North 3rd Street • P. O. Box 756
Richmond, Indiana 47374-0756

For information circle 26

...ore or less ta-
...uge to steel structures
...uid the older steam types?
...n.

fects and greater concentra... weight upon steam locomotive drive axles.

The effects these differences have on steel structures varies with span

...used by wood
...4-gauge "S"
...deterioration.
...rovides greater
...nd reduces

...6" sizes
...e.
...UNG
...uri)

...IRE
...r
...4) 771-6100

RAILROAD
DERAIL
INSTALLATION
and
MAINTENANCE
GUIDE

- *IMPROVE EXISTING INSTALLATIONS*
- *UP-GRADE ENGINEERING PLANS AND SPECIFICATIONS*

Derails MUST be installed and maintained properly to be effective. Learn from the EXPERTS.

- **Proper Installation**
- **Proper Maintenance**
- ***18* Point Inspection Check-List**

When it comes to Derails, we wrote the book

For complete information call or write.

WESTERN-CULLEN-HAYES, INC.
120 North 3rd Street • P.O. Box 756
Richmond, IN 47374-0756 • Telephone 317/962-0526

Write 77 on Reader Service Card

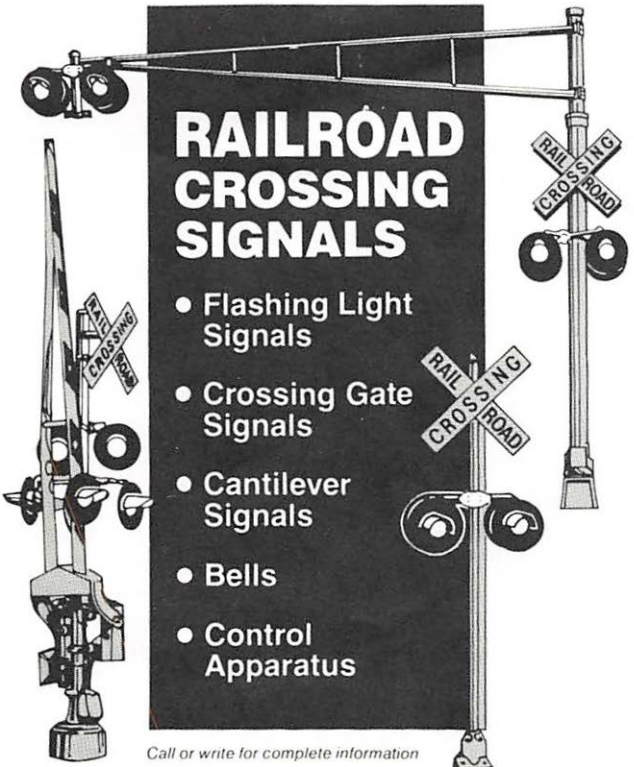
RAILROAD
CROSSING
SIGNALS
• Flashing Light Signals
• Crossing Gate Signals
• Cantilever Signals
• Bells
• Control Apparatus
RAIL CROSSING ROAD
Call or write for complete information
Serving the industry since 1889—
with experience and reliability
WC Hayes
WESTERN-CULLEN-HAYES, Inc.
2700 West 36th Place • Chicago, IL 60632-1682
Telephone 312/254-9600 • Telex 25-3206

3000 "Lil'l Hercules", offered by ilroad Supply & Equipment Co., ı elevated expanded steel deck, les, high load, double sealed, pre- ings, 8-in. cast steel wheels, 1-in. l tube frame and a collapsible de- nsport and storage. The cart load

WHEEL CONVEY

16-page catalog describing the complete line of Mathew's gravity wheel conveyors, has been issued by the Material Handling Division of Rexnord, Danville, Ky. The catalog presents engineering data, graphics and specifications on gravity wheel conveyors for straight and curve application. *Rexnord*

Write 112 on Reader Service Card

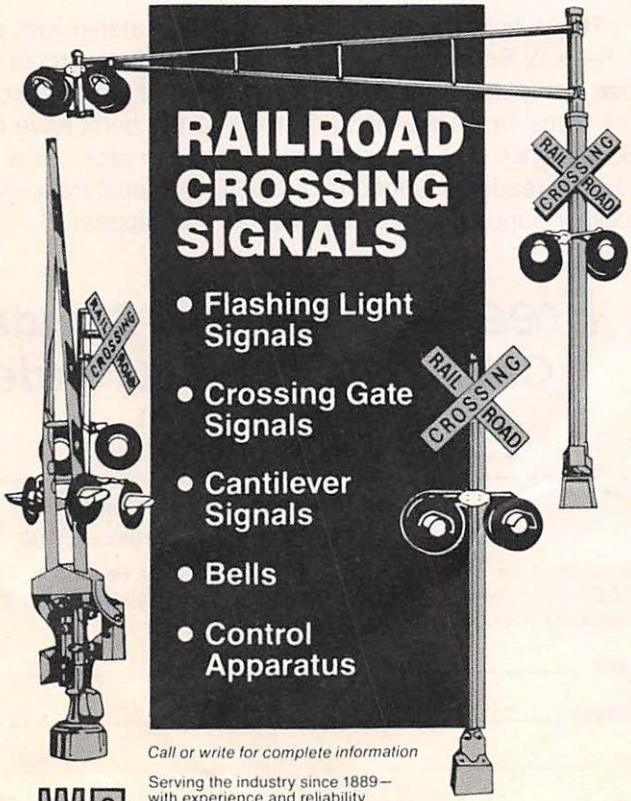

Write 52 on Reader Service Card

NEEDY MOTHERS COULD ADOPT DEVELOPING WEAPONS SYSTEMS AND RECEIVE MILLIONS IN AID UNTIL AGE OF DEPLOYMENT.

make life easier for yourself

PROTECTION IN A CAN

Maintenance aids in stock at WESTERN-CULLEN-HAYES meet applicable AAR Signal Division requisites

Sealing Compounds
Cold Application: WL-640 (1 gal.)
Signal Cement, Gray: 7202 (1 gal.)
Signal Cement, Black: 7209 (1 gal.)

Cable Paint
Victolac Universal Black: 12Q (1 gal.)

Gear Grease
Low Temperature, Reduced Splatter: 3590-1650 (1 qt.)

Rust and Corrosion Inhibitor
*No-Ox-Id "E": 970-145 (1 gal.)

Aluminum Thread Lube
Reduce Cross-Threading: 970-144 (1 qt.)

*Genuine Brand NO-OX-ID "E".

WC Hayes

Call or write:

WESTERN-CULLEN-HAYES, Inc.
2700 West 36th Place • Chicago, Illinois 60632
Telephone: 312/254-9600 • Telex 25-3206

in
hea
pre
overv
stress.

Also,
is lurkin
Ischemic
your phys
proper m
can lead

TIA's r
combinat

* Dizz

Not to be
TIA dizz
perceptio

* Spee
* Dist
* A fe
* Dou
distu
* Trou
* Fair

If you
sympton
immedia
vulnerab
sixty-fiv

Don't
preventi